GEV

REFRIGERATION EQUIPMENT

UNIVERSAL PARTS AND TOOLS

2016

GEV Catering Spares Ltd
307–309 Totemic House
Springfield Business Park
Caunt Road
Grantham
NG31 7FZ

www.gev-online.co.uk

Tel.: +44 (0)1476 583922
Fax: +44 (0)1476 514640
info@gev-online.co.uk

GEV Großküchen-Ersatzteil-Vertrieb GmbH
Gadastr. 4
85232 Bergkirchen
Germany

www.gev-online.com

Tel.: +49 (0)8142 6522-50
Fax: +49 (0)8142 6522-629
order@gev-online.com

DISCLAIMER OF LIABILITY:

Repairs on catering equipment should only be carried out by a qualified service technician and it is the buyer of the delivered part who bears the responsibility for its subsequent use or processing. The buyer must also be aware of the relevant national laws and regulations in force e.g. local gas supply. Part descriptions and pictures relating to the shape, application and other features of products are only provided for information purposes. We accept no liability for the accuracy of technical descriptions and illustrations in our catalogue and we reserve the right for any printing errors.

Table of contents

contents	page
ELECTRIC COMPONENTS	
heating elements	17
thermostats	18
switches	18
timers	19
transformers	20
electronic controllers	21
probes	40
solenoid valves	43
pressure switches	45
compressors	46
condensing trays	52
fans	52
MECHANICAL COMPONENTS, EQUIPMENT ACCESSORIES	
kitchen accessories	61
refrigeration cycle components	62
evaporators	68
shelves and shelf rails	70
gaskets	70
equipment-specific units	73
handles	73
hinges	74
locks	80

contents	page
WATER TECHNOLOGY	
hoses	108
TOOLS, FASTENING MATERIALS, CONSUMABLES	
tools	108
welding material	122
measuring equipment	124
consumables	128

Electronic controller

The built-in configuration assistant in the electronic controllers in the Darwin series automatically configures the main parameters according to the application type you have selected. You can carry out the configuration the first time you connect the controller to the power supply or after resetting the device.

Simply select the most suitable option for your system:

	Variable parameters					
Options	SP	d0	d1	F0	F3	P0
1: Miscellaneous	2ºC	4	20	8ºC	1	0
2: Frozen food products	-18ºC	4	20	0ºC	0	0
3: Fruit and vegetables	10ºC	4	20	30ºC	1	0
4: Fresh fish	0ºC	4	20	8ºC	1	0
5: Soft drinks	3ºC	24	20	8ºC	1	0
6: Bottle racks	12ºC	24	20	30ºC	1	0
7: Climate	21ºC	96	0	99ºC	1	0
8: Heat/Incubators	37ºC	-	-	-	-	1

SP: Set point setting (threshold values depending on sensor type)

d0: Defrosting frequency (in hours)

d1: Maximum defrost duration (in minutes)

F0: Fan lock temperature by sensor

F3: Status of the fan during defrosting, 0=stopped, 1=in operation

P0: Default setting for function types, i.e. how the temperature of the controller is regulated; 0=direct mode, cooling applications, 1=reverse mode, heating applications

AKO
we make it easy

DARWIN SERIES

NOTE:
The standard parameters according to the type of application have been set for the most frequently used application. Check the parameters to see if they match your system.

Simple initial configuration
Ideal as a substitute part

Cold room controllers

6 relay outputs,
without data logger
GEV No. 378354

6 relay outputs, with
2-channel data logger incl.
2 NTC probes
GEV No. 378446

Every Control Group

All the technical data can be found in the EVCO section (see page 33)

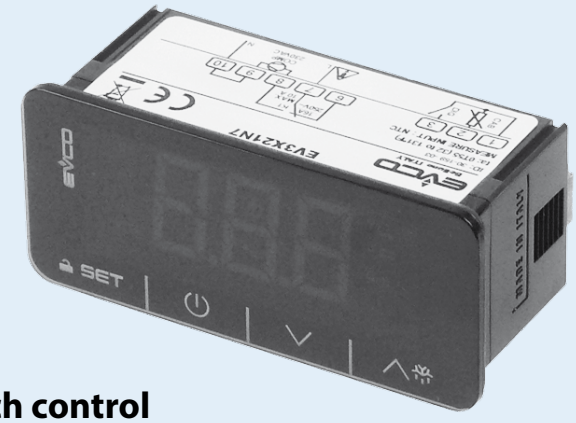

Touch control

1 relay output, 16A
GEV No. 378443

1 relay output, 30A
GEV No. 378444

3 relay outputs, 30/8/5A
GEV No. 378445

Reliable quality at true value for money

Quality tools

Leak detector
all refrigerants
GEV No. 801909

Vacuum pump, 125W
GEV No. 801905

Mastercool® Inc
"World Class Quality"

Manometer
GEV No. 800322

Quality tools from the USA for refrigeration equipment

Pipe connections

Coupling type MS
for copper and/or steel tubes with identical tube outer diameters

GEV No. 750601

VULKAN LOKRING

- **TÜV approved**
- **Mechanical pipe connection**
- **Permanent hermetic seal**

Reducing connector
type MS
GEV No. 750585

Connector
type MS
GEV No. 750576

Connector
type AL
GEV No. 750587

The ideal assembly tool for pipe connections

Refrigeration gaskets
Custom-made

- Top quality with welded corners
- Over 70 different profiles
- Instant price calculation in the GEV Webshop

On the following pages you will find our extensive selection of custom-made gaskets.
Order today in our Webshop!

www.gev-online.co.uk
www.gev-online.com

Ready made gaskets

- 1,000 items
- 120 profiles
- For more than 100 manufacturers

All gaskets can be found in the GEV Webshop

www.gev-online.co.uk
www.gev-online.com

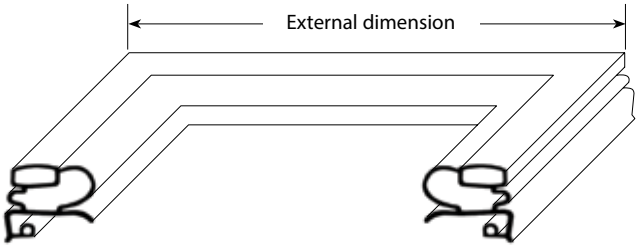

Threaded gaskets with magnet

– Profile illustrations in original size
– All dimensions in mm

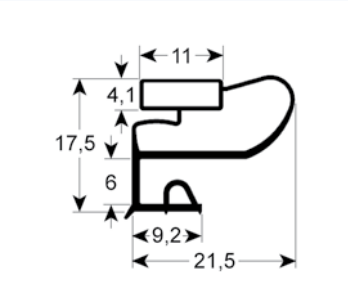

9663 **3-5 days**
Suitable for: Friulinox, Whirlpool

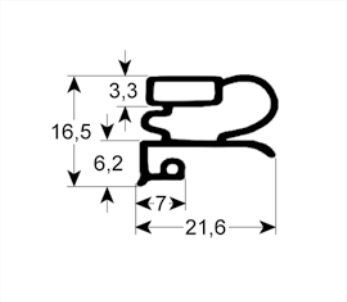

9030 **3-5 days**
Suitable for: Alpeninox, Art Serf, Asskühl, Dexion, Electrolux, Emainox, Küleg, Zanussi

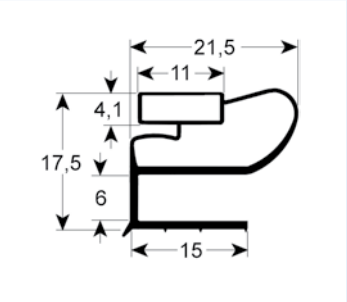

9664 **3-5 days**

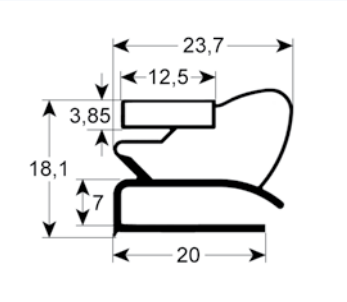

9954 **3-5 days**

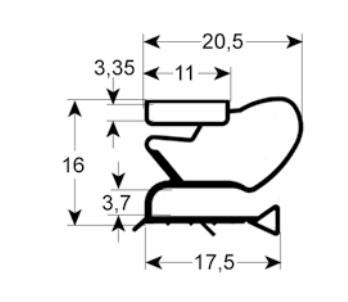

9515 **3-5 days**
Suitable for: Liebherr

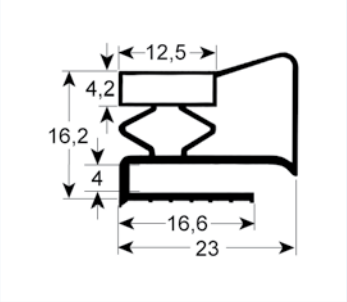

9953 **3-5 days**

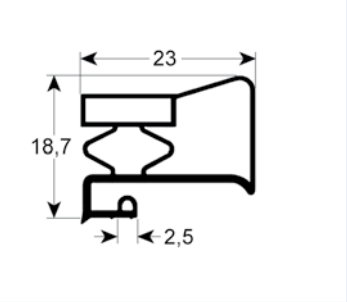

9949 **3-5 days**

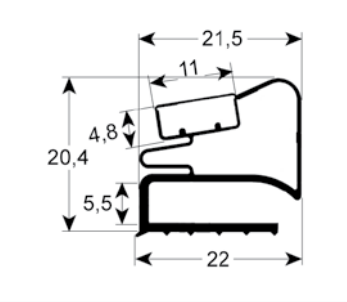

9526 **3-5 days**

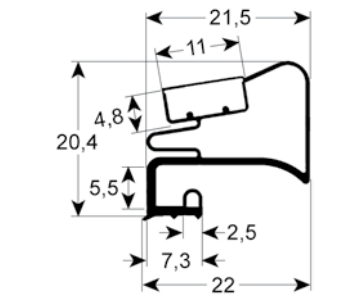

9525 **3-5 days**

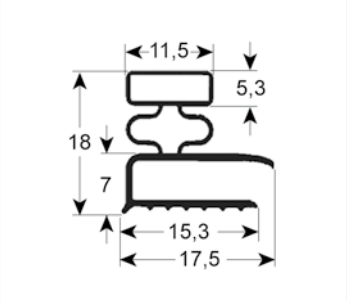

9031 **3-5 days**
Suitable for: Afinox, Mareno, Pastorfrigor, Sagi

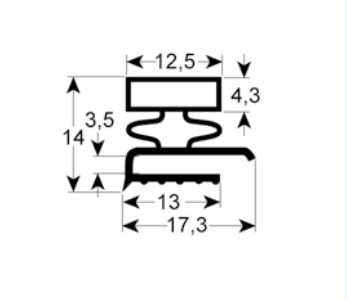

9140 **3-5 days**
Suitable for: Afinox, Angelo Po, Everlasting

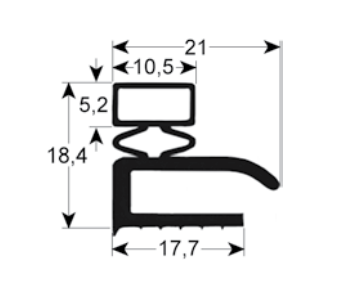

9106 3-4 weeks
Suitable for: Fagor, ISA, Mareno

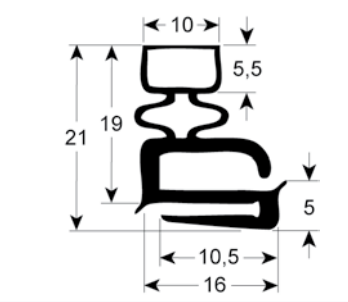

9100 3-4 weeks
Suitable for: Asskühl, Küleg

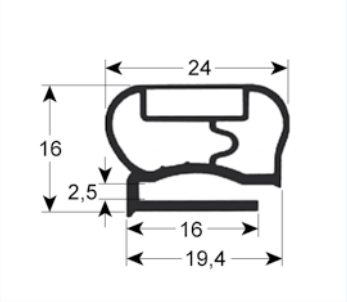

9200 **3-5 days**
Suitable for: Eisvoigt, Frigopol, Küleg

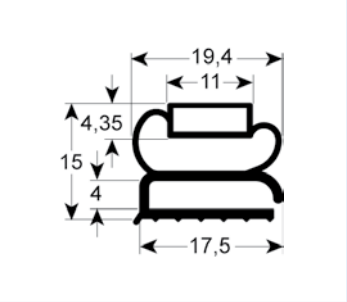

9207 **3-5 days**
Suitable for: Ambach, Angelo Po, Küleg, Sagi

Threaded gaskets without magnet

– Profile illustrations in original size
– All dimensions in mm

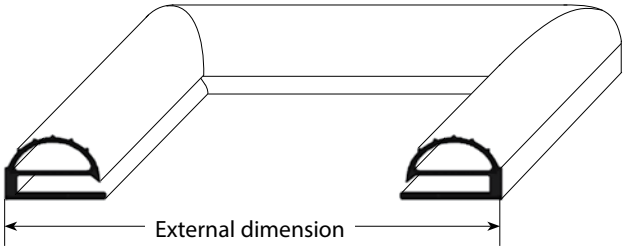

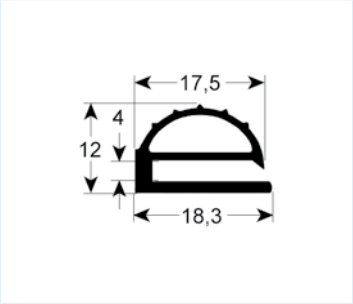

9102 3-5 days

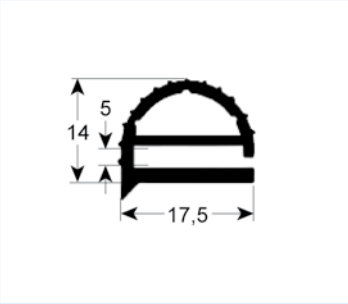

9104 3-5 days

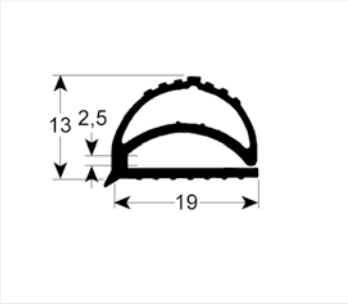

9158 3-5 days

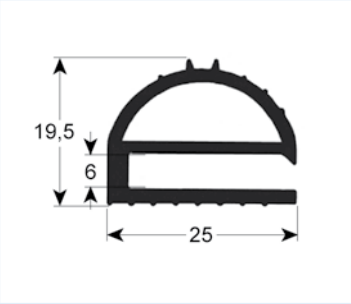

9169 3-4 weeks

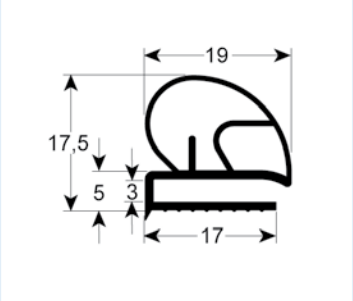

9710 3-5 days

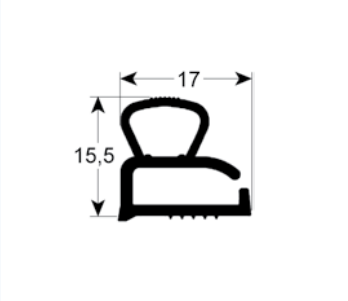

9605 3-5 days

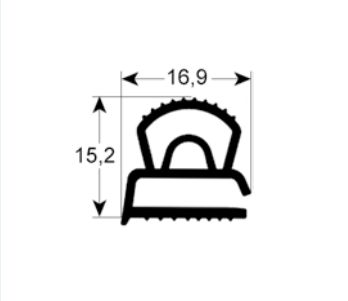

9610 3-5 days

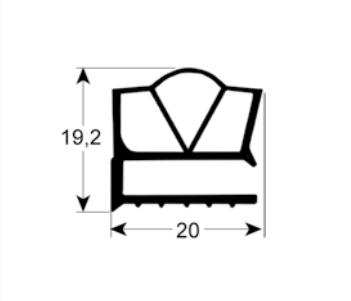

9189 3-5 days

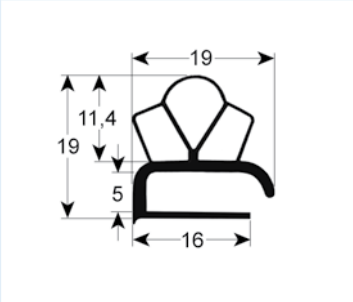

9191 3-5 days

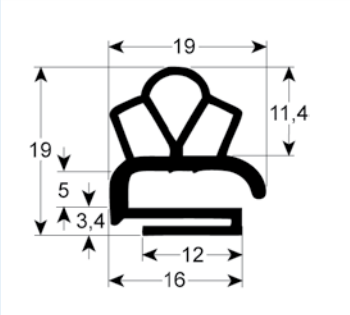

9138 3-5 days

Customise your own gasket.
Calculate and order online today.

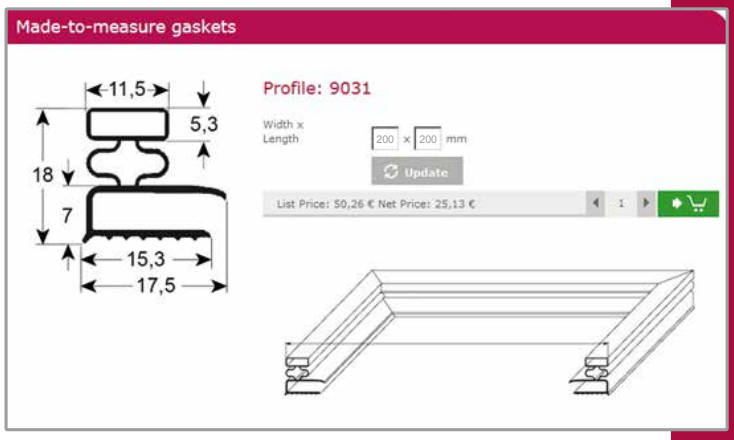

www.gev-online.co.uk
www.gev-online.com

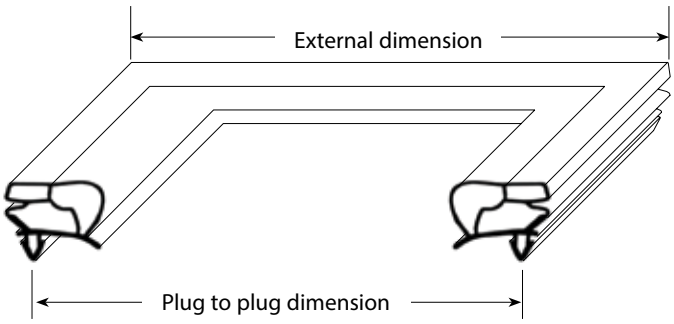

Plug-in gaskets with magnet

– Profile illustrations in original size
– All dimensions in mm

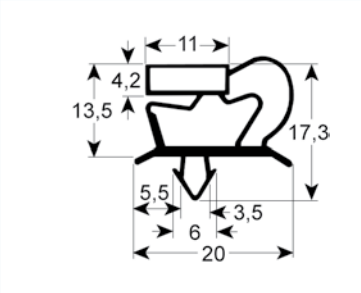

9048 3-5 days
Suitable for: Angelo Po, Coldline, Desmon, Electrolux, Everlasting, Friulinox, Icematic, Ilsa, Irinox, K+T, Mercatus, Polaris, Sagi, Tecnodom, Zanussi

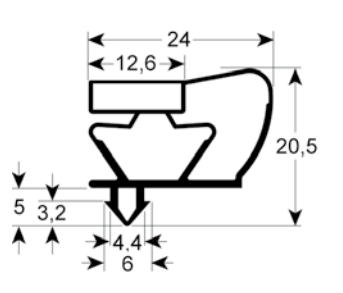

9043 3-5 days

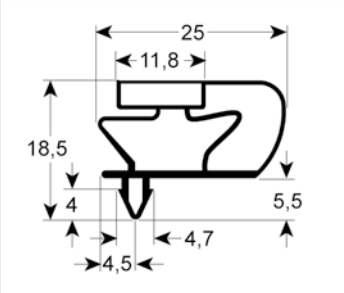

9799 3-5 days

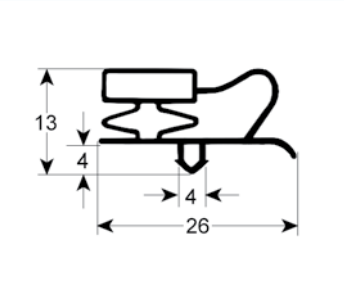

9013 3-5 days

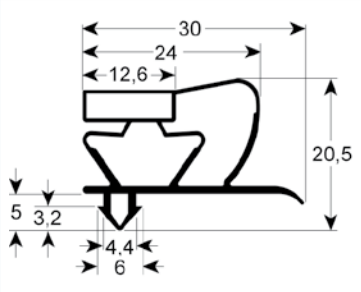

9045 3-5 days
Suitable for: Incold

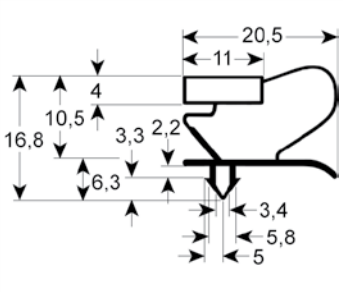

9053 3-5 days

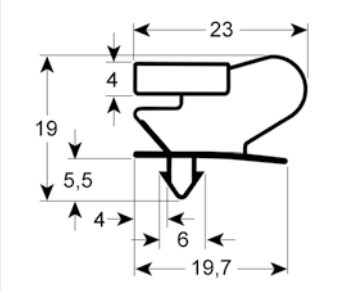

9046 3-5 days
Suitable for: Asskühl, Sagi

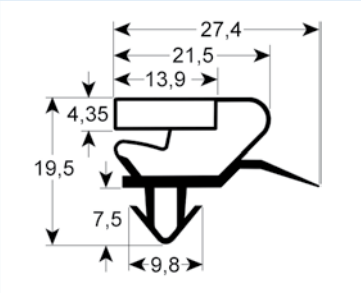

9398 3-5 days

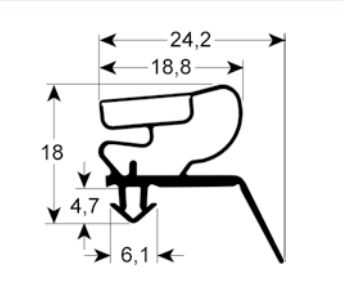

9400 3-5 days

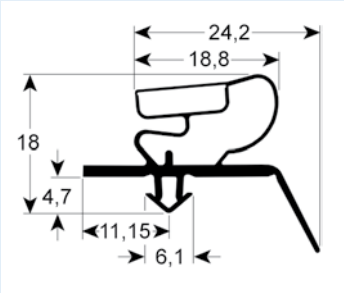

9401 3-5 days

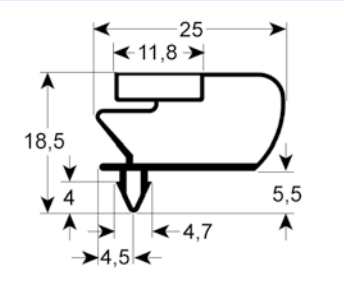

9796 3-5 days
Suitable for: INOMAK Comercial

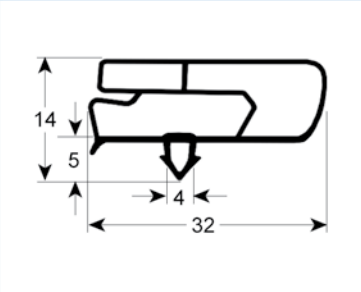

9797 3-5 days

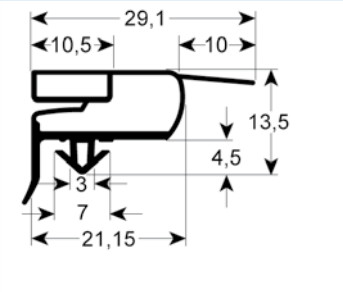

9773 3-5 days

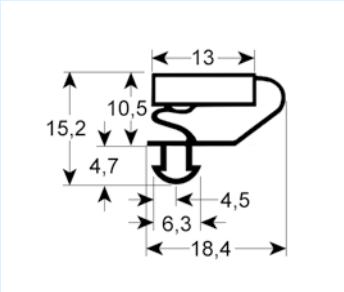

9703 3-5 days
Suitable for: Afinox, Alaska, Alpeninox, Dexion, Friulinox, ISA, Polaris, Studio 54, Zoin

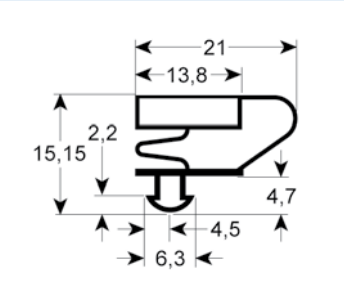

9704 3-5 days

Plug-in gaskets with magnet

– Profile illustrations in original size
– All dimensions in mm

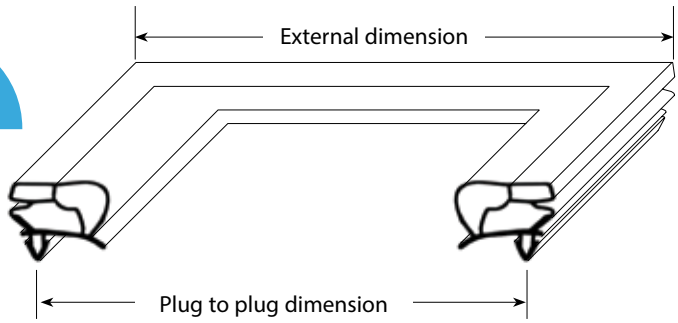

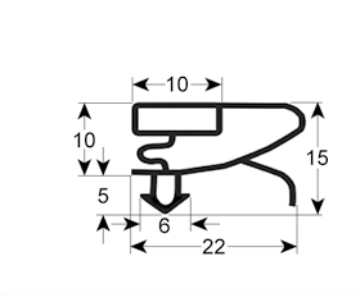

9753 **3-5 days**
Suitable for: Angelo Po, C&D, Enofrigo, Everlasting, Gemm, IRF, ISA, Zanussi

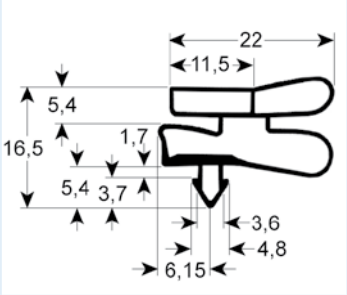

9151 **3-5 days**

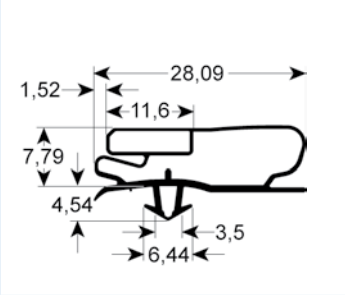

9500 **3-5 days**

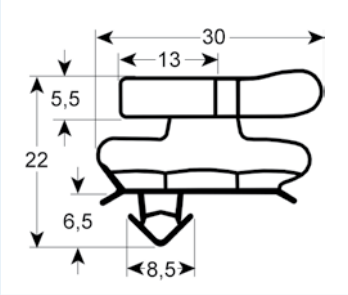

9505 **3-5 days**

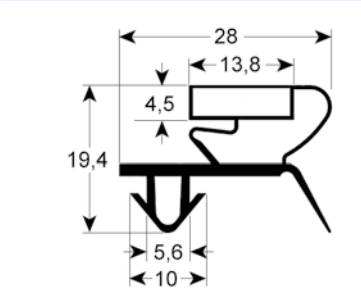

9044 **3-5 days**

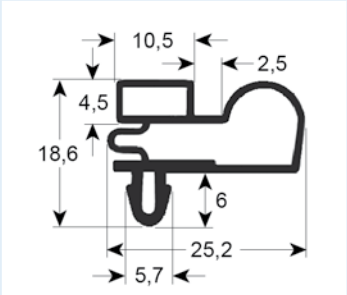

9010 **3-5 days**
Suitable for: Desmon, Framec, Groen, Iarp, Iberna, Ilsa, Mondial Elite, Scotsman, Tefcold

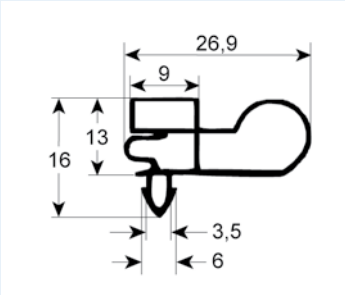

9303 3-4 weeks

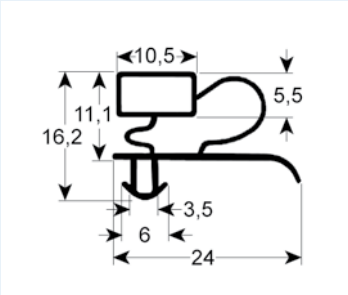

9333 **3-5 days**
Suitable for: Angelo Po, C&D, Dexion, Electrolux, Enofrigo, Everlasting, Fagor, Gelart, Gemm, Iberna, ICV, Isa, Sagi, Zanussi

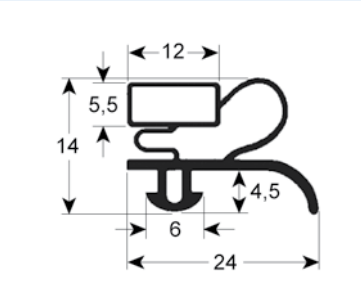

9012 **3-5 days**
Suitable for: Angelo Po, C&D, Emmepi, Fagor, Gelart, ICV, ISA, Sagi

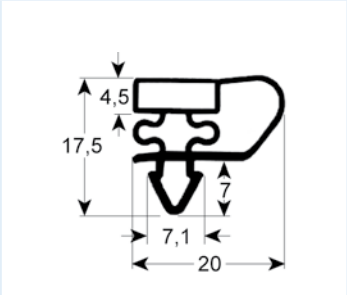

9153 **3-5 days**
Suitable for: IME Turbo, Mafirol, Williams, Gemm, Gamko

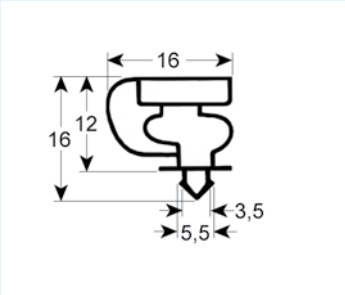

9154 **3-5 days**
Suitable for: Tecfrigo S.P.A.

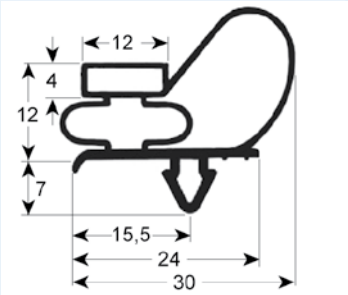

9743 **3-5 days**
Suitable for: EKU, IME Turbo, Küleg, Telewig, Ungermann

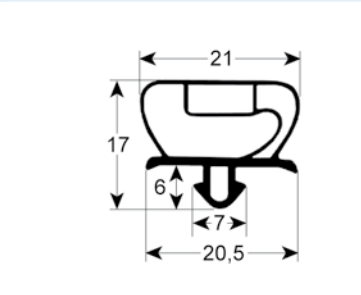

9235 **3-5 days**

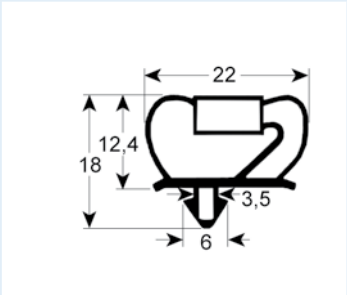

9237 **3-5 days**
Suitable for: Electrolux, Misa, Zanussi

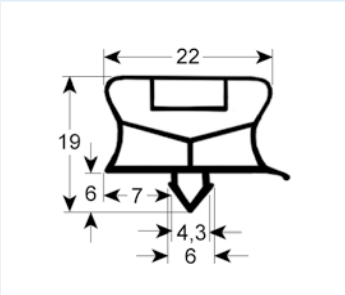

9794 **3-5 days**
Suitable for: Afinox, Electrolux, Friulinox, Polaris, Whirlpool, Zanussi

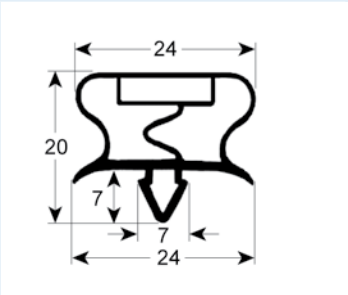

9195 **3-5 days**
Suitable for: Cool Compact, Foster, IME Turbo, Ilsa, Irinox, Williams

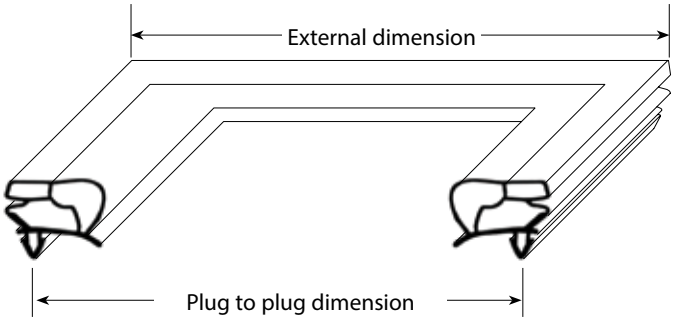

Plug-in gaskets with magnet

– Profile illustrations in original size
– All dimensions in mm

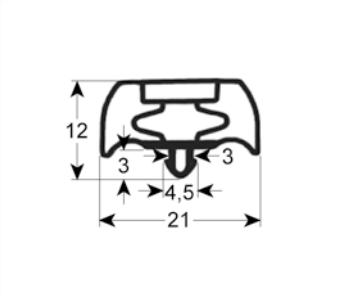

9252 3-5 days
Suitable for: Franke, LTH

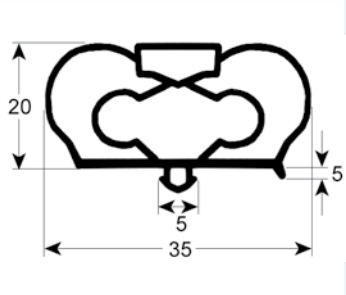

9798 3-5 days

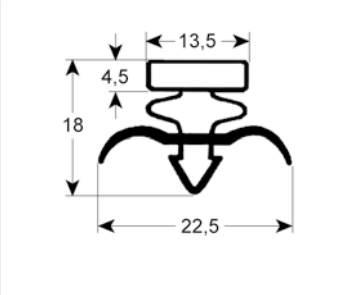

9171 3-5 days
Suitable for: Cool Compact, Eisfink, Eisvoigt, Foster, Frigopol, True

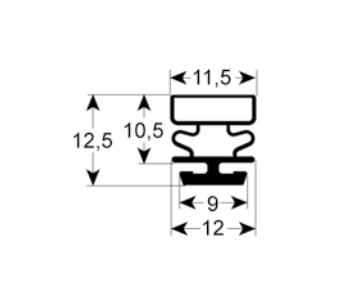

9322 3-5 days
Suitable for: BBC, Ideal, Kälte2000

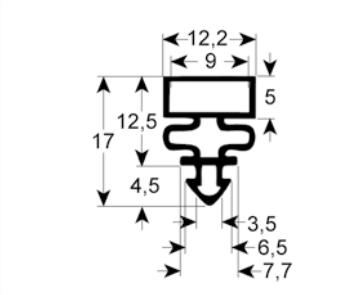

9313 3-5 days

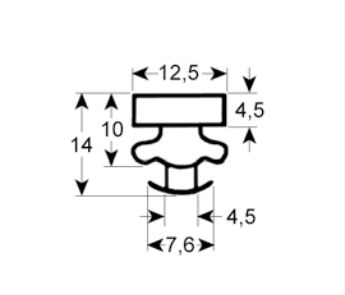

9373 3-5 days
Suitable for: Electrolux, Fagor, Küleg, Mondial Elite, Ronda, Zanussi

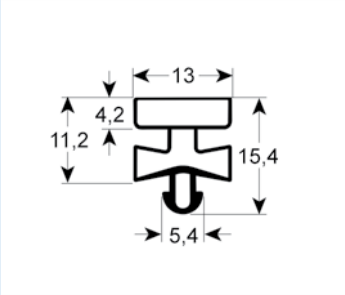

9380 3-5 days

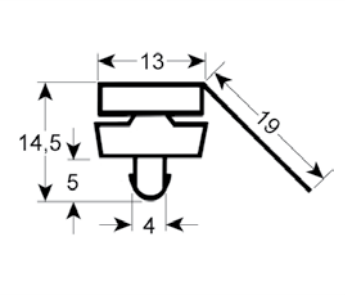

9385 3-5 days

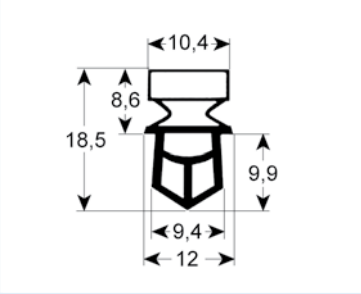

9325 3-5 days

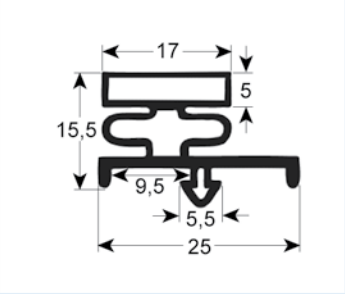

9185 3-4 weeks
Suitable for: Beverage Air, Franke, Rieber

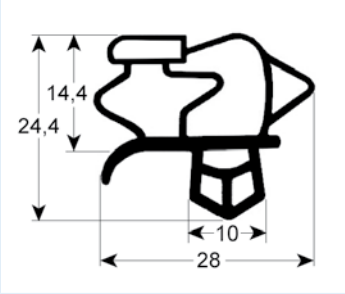

9793 3-5 days
Suitable for: Frigowell, LTH

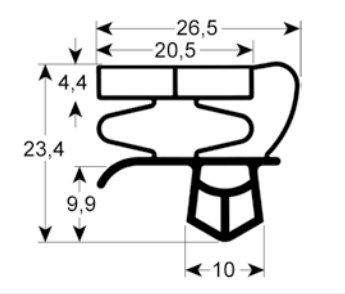

9147 3-5 days

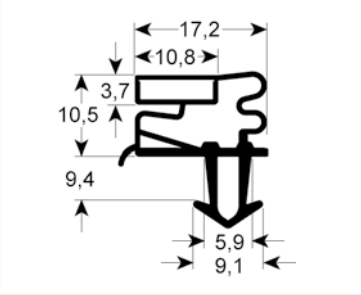

9275 3-5 days

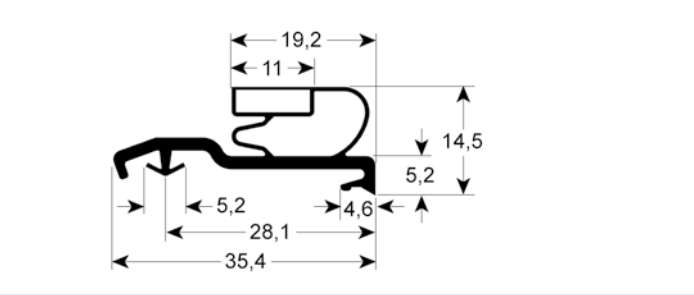

9724 3-5 days

Plug-in gaskets with magnet

– Profile illustrations in original size
– All dimensions in mm

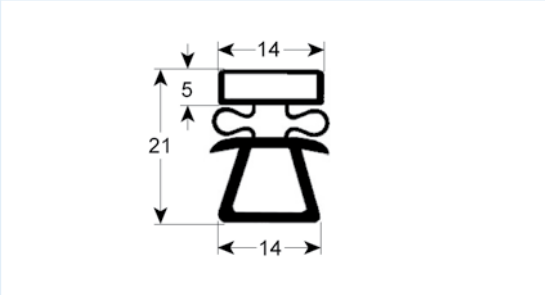

9162 **3-5 days**

Suitable for: Eisfink, Eisvoigt, Franke, Hagola, Salvis

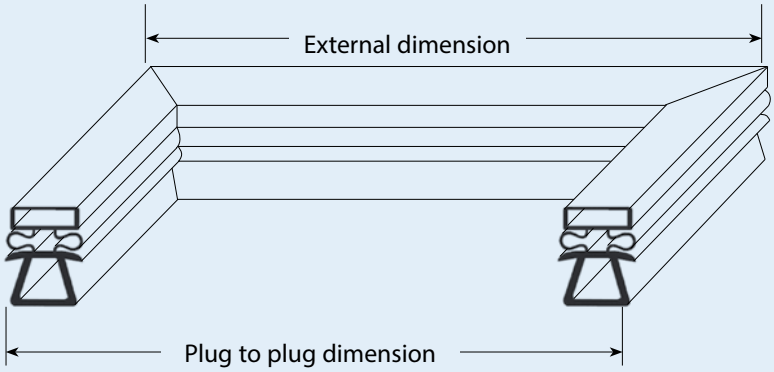

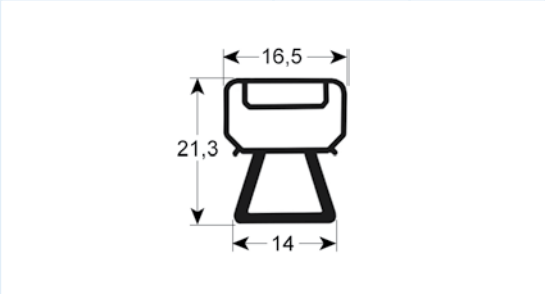

9166 **3-5 days**

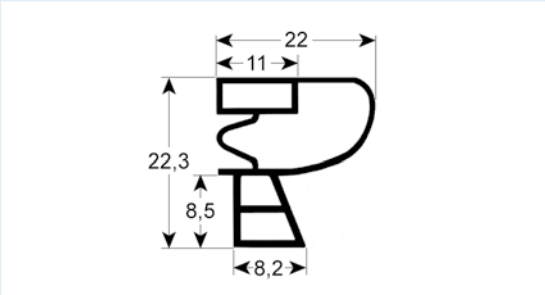

9950 **3-5 days**

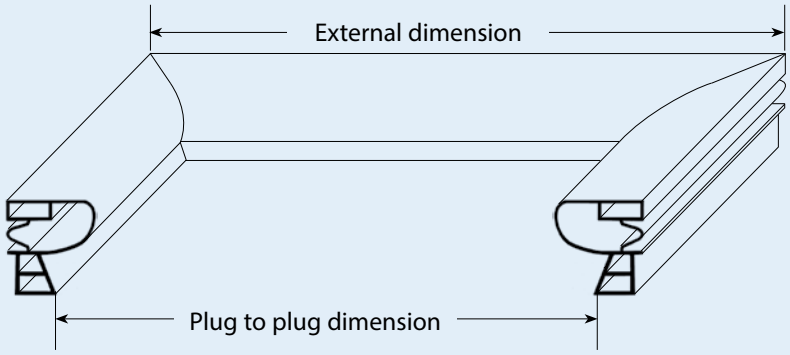

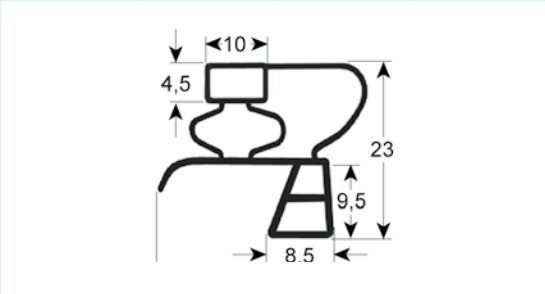

9783 **3-5 days**

Suitable for: EKU, Mareno, Silko

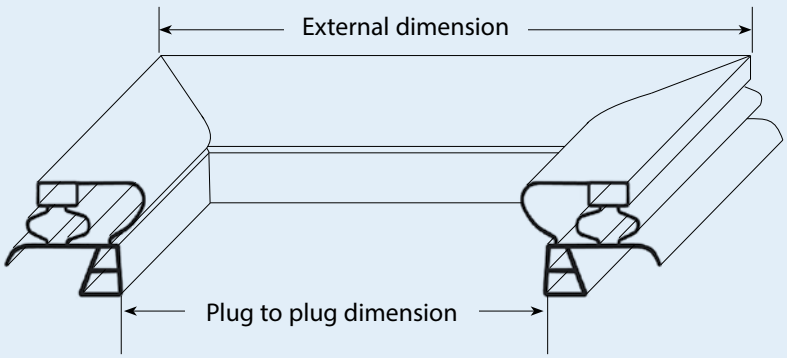

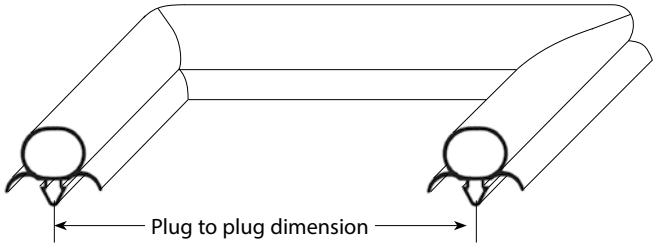

Plug-in gaskets without magnet

– Profile illustrations in original size
– All dimensions in mm

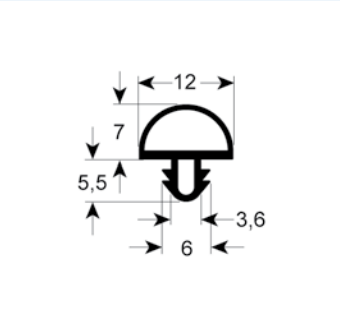

9722 3-5 days

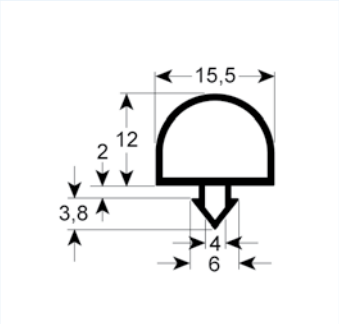

9728 3-5 days

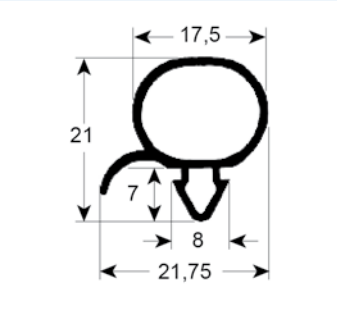

9196 3-5 days

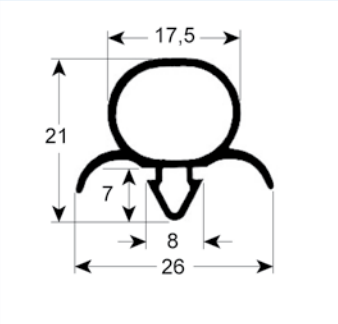

9192 3-5 days

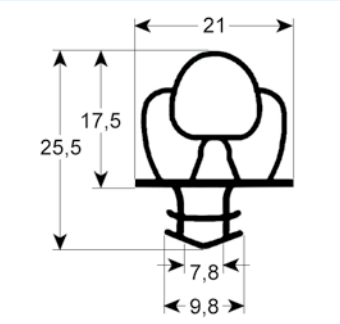

9650 3-5 days

Suitable for: Costan

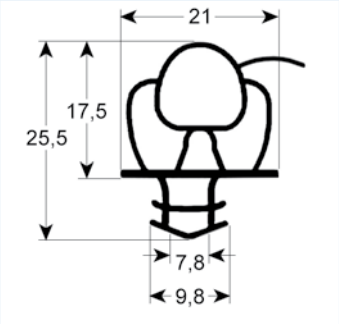

9651 3-5 days

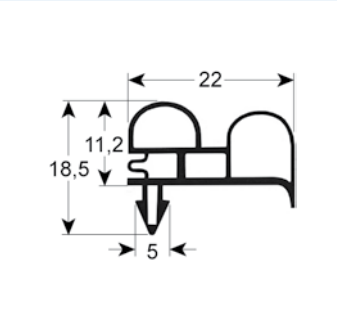

9420 3-5 days

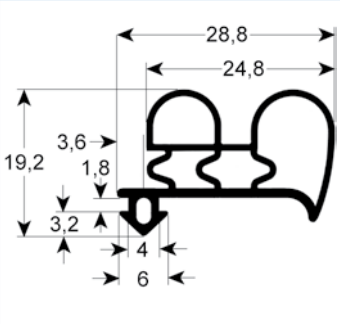

9430 3-5 days

GEV no. 801490
Cleaner spray for refrigeration gaskets 500ml

Key

app.	application
AT max.	ambient temperature max.
B1	width 1
B2	width 2
BA	blade angle
cap.	capillary pipe length
CL	cable length
D	fan wheel diameter
DEF time	defrosting time
def.int.	defrosting interval
FM	front measurements
Fø	flange diameter
freq.	frequency
H	height
H1	height 1
HD	hole distance
Hø	hole diameter
L	length
L1	length 1
L2	length 2
L3	length 3
LCT	laminated core thickness
MD	mounting distance
MD1	mounting distance 1
MD2	mounting distance 2
MM	mounting measurements
MP	mounting position
NS	nominal size
ø	diameter
P	power
Qty	quantity
reset HP	reset high pressure
reset LP	reset low pressure
RL	roller length
SC	switching capacity
SD HP	switching difference at high pressure
SD LP	switching difference at low pressure
SOT	switch-off temperature
SP/400V	switch power at 400V
T	thickness
T.max.	temperature max.
t.range	operating temperature range
temp.	temperature range
Temp.Res.	temperature resistance
TrTy	instantaneous tripping current type
TS	thread size
volt.	voltage
W	width
WS	wrench size

heating elements

heating elements for refrigeration

heating elements for defrosting

1

fig.	GEV No.	P (W)	volt. (V)	L (mm)	tube ø (mm)
1	417591	500W (2x250W)	230V (2x115V)	800	8.5
1	417592	660W (2x330W)	230V (2x115V)	1000	8.5
1	417593	1750W (2x875W)	230V (2x115V)	2100	8.5
1	417594	2200W (2x1100W)	230V (2x115V)	2550	8.5
1	417595	2600W (2x1300W)	230V (2x115V)	2x3000	8.5

1

fig.	GEV No.	P (W)	volt. (V)	L (mm)	W (mm)
1	417609	300	230	320	140
1	417610	500	230	400	130
1	417611	700	220	920	150

heating cables

connection on both sides

with wire end ferrules

pos.	GEV No.	P (W)	volt. (V)	L (mm)	L1 (unheated) (mm)	L2 (heated) (mm)
1	420372	54	230	5000	2x1000	3000
2	420373	72	230	6000	2x1000	4000
3	420374	90	230	7000	2x1000	5000
4	420375	108	230	8000	2x1000	6000
5	420376	126	230	9000	2x1000	7000
6	420377	144	230	10000	2x1000	8000

connection on both sides (metal braided)

pos.	GEV No.	P (W)	volt. (V)	L (mm)	L1 (unheated) (mm)	L2 (heated) (mm)
1	416330	26	230	2100	2x540	1020
2	416331	53	230	3100	2x540	2020
3	416332	95	230	4600	2x550	3500
4	416333	130	230	6000	2x520	4960
5	416334	188	230	8080	2x540	7000
6	416335	272	230	11000	2x540	9920

connection single-sided

pos.	GEV No.	P (W)	volt. (V)	L (mm)	L1 (unheated) (mm)	L2 (heated) (mm)
1	416336	16	230	2900	2400	500
2	416337	25	230	2900	1900	1000
3	417518	50	230	2000	1000	1000
4	416338	55	230	2500	500	2000
5	417519	100	230	3000	1000	2000
6	417520	150	230	4000	1000	3000
7	417521	200	230	5000	1000	4000
8	417522	250	230	6000	1000	5000
9	417523	300	230	7000	1000	6000

supplied by meter

pos.	GEV No.	volt. (V)	Ohm/meter (Ohm/m)	ø (mm)	cable material	Qty
1	416365	230	105	3	silicone	MTR
2	418405	230	205	3	silicone	MTR
3	416340	230	365	3	silicone	MTR

heating cartridges

1

fig.	GEV No.	P (W)	volt. (V)	ø (mm)	L (mm)	TS	CL (mm)
1	417227	90	230	12	124	3/8”	4000
1	417570	110	230	12	120	3/8”	1000
1	417577	190	230	12	180	3/8”	300
1	417571	230	230	12	180	3/8”	1000
1	418892	300	230	12	240	3/8”	2000
1	417572	330	230	12	240	3/8”	1000

foil heating elements

with temperature limiter

1

2

fig.	GEV No.	L (mm)	W (mm)	P (W)	volt. (V)	t.max. (°C)	CL (mm)
1	418855	210	58	100	220	130	500
2	418856	210	116	200	220	130	500

thermostats

refrigeration thermostats

1

fig.	GEV No.	t.range (°C)	probe	cap. (mm)	type
1	390673	0 up to +40	ø6x110mm	1500	IMPORT
1	390535	0 up to +40	ø6x110mm	1500	PRODIGY
1	390010	-35 up to +35	ø6x110mm	1500	IMPORT
1	390534	-35 up to +35	ø6x110mm	1800	PRODIGY

1 2

fig.	GEV No.	t.range (°C)	probe	cap. (mm)	producer
1	390674	0 up to +40	ø6x110mm	1500	IMPORT
1	390537	0 up to +40	ø6x110mm	1500	PRODIGY
1	390012	-35 up to +35	ø6x110mm	1500	IMPORT
1	390536	-35 up to +35	ø6x110mm	1500	PRODIGY
2	390011	-35 up to +35	ø6x110mm	-	IMPORT
2	390538	-35 up to +35	ø6x110mm	-	PRODIGY

switches

rocker switches

27.8x25mm

1 2 3 4

fig.	GEV No.	description	function	volt. (V)	SC (A)	connection
1	345278[1]	switch	2NO	250	16	F6.3
2	345013[1]	switch	2NO	250	16	F6.3
3	301245[1]	switch	2NO	250	16	F6.3
4	345277[1]	switch	2NO	250	16	F6.3

[1]illuminated

30x22mm

1 2 3 4 5

fig.	GEV No.	description	function	volt. (V)	SC (A)	connection
1	301000	switch	2NO	250	16	F6.3
2	301003	switch	2NO	250	16	F6.3
3	301002	switch	2NO	250	16	F6.3
4	301001	switch	2NO	250	16	F6.3
5	301009	switch	2NO	250	16	F6.3

1 2 3 4 5

fig.	GEV No.	description	function	volt. (V)	SC (A)	connection
1	347791	switch	2NO	230	20	F6.3
2	347973	switch	2NO	250	20	F6.3
3	347974	switch	2NO	250	20	F6.3
4	347207	switch	2NO	250	20	F6.3
5	301202[1]	switch	2NO	230	20	F6.3

[1]non-illuminated

1 2 3 4 5

fig.	GEV No.	description	function	volt. (V)	SC (A)	connection
1	347531	switch	2NO	250	20	F6.3
2	347774	switch	2NO	250	20	F6.3
3	347775	switch	2NO	250	20	F6.3
4	347956	switch	2NO	250	20	F6.3
5	347814[1]	switch	2NO	250	20	F6.3

[1]non-illuminated

push switches

30x22mm

1 2 3 4

fig.	GEV No.	description	function	volt. (V)	SC (A)	connection
1	301086	switch	2NO	250	12	F6.3
2	301082	switch	2NO	250	12	F6.3
3	301083	switch	2NO	250	12	F6.3
4	301084	switch	2NO	250	12	F6.3

Find the complete and up-to-date range of products in our GEV Webshop

timers

defrost timers

CDC

1

technical data:
supply 230V

fig.	GEV No.	type	def.int.	DEF time (min)	fan delay
1	360193	13102	1-12x in 24h	2-50	0-10

FLASH

1

technical data:
supply 230V

fig.	GEV No.	type	def.int.	DEF time (min)
1	360184	16022	1-96 in 24h	15

2

technical data:
supply 230V

fig.	GEV No.	type	def.int.	DEF time (min)
2	360247	MICROMAT	1-48 in 24h	15

3

technical data:
supply 230V

fig.	GEV No.	type	def.int.	DEF time (min)
3	360426	MONOMAT	1-96 in 24h	15
3	360425	MONOMAT	1-96 in 24h	15

4

technical data:
supply 230V

fig.	GEV No.	type	def.int.	DEF time (min)
4	360262	MONOTRON 124	1-20 in 24h	1-1430

5

technical data:
supply 230V

fig.	GEV No.	type	def.int.	DEF time (min)
5	360292	MONOTRON 200	1-20 in 24h	1-1430

6

technical data:
supply 230V

fig.	GEV No.	type	def.int.	DEF time (min)
6	360414[1]	MONOTRON 300CS	1-56 in 24h	1-60

[1]with fan delay 1-60min

GUAITANI

1

technical data:
supply 230V

fig.	GEV No.	type	def.int.	DEF time (min)	fan delay
1	360171	R4/1	2/4	4-60	3
1	360157	R4/2	2/4	0-40	3

LEGRAND

1

technical data:
supply 230V

fig.	GEV No.	type	def.int.	DEF time (min)
1	360423	ALPHAREX D21	1-56 in 24h	1-60
1	360424	ALPHAREX D22	1-28 in 24h	1-60

2

technical data:
supply 230V

fig.	GEV No.	type	def.int.	DEF time (min)
2	360422	MICROREX QT31F	1-48 in 24h	30
2	360421	MICROREX T31F	1-48 in 24h	1-60

3

technical data:
supply 230V

fig.	GEV No.	type	def.int.	DEF time (min)
3	360419[1]	POLARREX KKT	1-48 in 24h	1-60
3	360417	POLARREX KT	1-48 in 24h	1-60
3	360420[1]	POLARREX QKKT	1-48 in 24h	1-60
3	360418	POLARREX QKT	1-48 in 24h	1-60

[1]with fan delay 1-60min

MINI T

1

fig.	GEV No.	type	def.int.	DEF time (min)
1	360150	3611	1-48x per 24h	15-144 min

miscellaneous

1

fig.	GEV No.	type	def.int.	DEF time (min)	fan delay
1	360187	RZ-2001-21	4H	15	5

transformers

encapsulated transformers

PMA

1

fig.	GEV No.	primary	secondary	power (VA)	secondary (A)
1	379054	230VAC	12VAC	3	0.25
1	379195	230VAC	12VAC	5	0.4
1	401174	230VAC	12VAC	6	0.5
1	379196	230VAC	12VAC	10	0.8

Find the complete and up-to-date range of products in our GEV Webshop

electronic controllers

AKO

universal contollers

built-in version

1

fig.	GEV No.	type	supply (V)	voltage	relay outputs	relay output 1	relay output 2	relay output 3	input 1	input 2	interface RS485
1	378428	D14726-C	90-240	AC	2	CO-8A(4)	CO-8A(4)	-	NTC/PTC/Pt100/TC(J,K)/mA	DI	X
1	378429	D14727	12/24	AC/DC	2	CO-8A(4)	CO-8A(4)	-	NTC/PTC/Pt100/TC(J,K)/mA	DI	-
1	378430	D14729	230	AC	2	CO-8A(4)	CO-8A(4)	-	NTC/PTC/Pt100/TC(J,K)/mA	DI	-
1	378431	D14729-C	90-240	AC	2	CO-8A(4)	CO-8A(4)	-	NTC/PTC/Pt100/TC(J,K)/mA	DI	X
1	379926	D14724	12/24	AC/DC	2	CO-8A(4)	NO-8A(4)	-	NTC/PTC/Pt100/TC(J,K)/mA	DI	-
1	379927	D14726	230	AC	2	CO-8A(4)	NO-8A(4)	-	NTC/PTC/Pt100/TC(J,K)/mA	DI	-

refrigeration controllers

built-in version

1

2

3

4

fig.	GEV No.	type	supply (V)	voltage	relay outputs	relay output 1	relay output 2	relay output 3	relay output 4	input 1	input 2	input 3	input 4	interface RS485
1	379357[1]	13112	12	AC/DC	1	NO-12A(9)	-	-	-	NTC	-	-	-	-
1	379358[1]	13123	230	AC	1	NO-12A(9)	-	-	-	NTC	-	-	-	-
2	378424[1]	D14123-2-RC	90-240	AC	1	CO-16A(10)	-	-	-	NTC/PTC	NTC/PTC/DI	DI	-	X
2	379507[1]	D14123-2	230	AC	1	CO-16A(10)	-	-	-	NTC/PTC	NTC/PTC/DI	DI	-	-
2	379591[1]	D14112	12/24	AC/DC	1	CO-12A(9)	-	-	-	NTC/PTC	NTC/PTC/DI	DI	-	X
2	379797[1]	D14212	12	AC/DC	2	CO-12A(9)	CO-8A(4)	-	-	NTC	NTC/DI	DI	-	X
2	379314[1]	D14223	230	AC	2	CO-12A(9)	CO-8A(4)	-	-	NTC/PTC	NTC/PTC/DI	DI	-	X
2	378425[1]	D14323-C	90-240	AC	3	CO-12A(9)	NO-5A(4)	NO-8A(4)	-	NTC/PTC	NTC/PTC/DI	DI	-	X
2	379456[1]	D14323	230	AC	3	CO-12A(9)	NO-5A(4)	NO-8A(4)	-	NTC/PTC	NTC/PTC/DI	DI	-	-
2	379514	D14323	230	AC	3	CO-12A(9)	NO-5A(4)	NO-8A(4)	-	NTC/PTC	NTC/PTC/DI	DI	-	-
2	379742[1]	D14312	12	AC/DC	3	CO-12A(9)	NO-5A(4)	NO-8A(4)	-	NTC/PTC	NTC/PTC/DI	DI	-	-
2	378426[1]	D14423	230	AC	4	NO-5A(4)	NO-5A(4)	NO-5A(4)	NO-5A(4)	NTC/PTC	NTC/PTC/DI	NTC/PTC/DI	-	-
2	379508[1]	D14423-RC	90-240	AC	4	NO-5A(4)	NO-5A(4)	NO-5A(4)	NO-5A(4)	NTC/PTC	NTC/PTC/DI	NTC/PTC/DI	-	X
2	379737[1]	D14412-RC	12	AC/DC	4	NO-5A(4)	NO-5A(4)	NO-5A(4)	NO-5A(4)	NTC/PTC	NTC/PTC/DI	NTC/PTC/DI	-	X
3	379408	D14125	230	AC	1	NO-12A(9)	-	-	-	NTC/PTC	-	-	-	-
3	379460[1]	D14123	230	AC	1	NO-12A(9)	-	-	-	NTC/PTC	-	-	-	-
4	378310[1]	D10123	230	AC	1	CO-12A(9)	-	-	-	NTC/PTC	DI	DI	-	-
4	378427[1]	D10223	230	AC	2	CO-12A(9)	CO-8A(4)	-	-	NTC/PTC	NTC/PTC/DI	DI	-	-
4	379811[1]	D10323	230	AC	3	CO-12A(9)	NO-5A(4)	NO-8A(4)	-	NTC/PTC	NTC/PTC/DI	DI	-	-

[1]incl. 1x NTC probe

5

fig.	GEV No.	type	supply (V)	voltage	relay outputs	relay output 1	relay output 2	relay output 3	relay output 4	input 1	input 2	input 3	input 4	interface RS485
5	379861[1]	10123	230	AC	2	NO-12A(9)	CO-8A(4)	-	-	NTC	DI	-	-	-
5	379862[1]	10223	230	AC	3	NO-12A(9)	NO-8A(3)	CO-8A(4)	-	NTC	NTC/DI	DI	-	-
5	379863[1]	10323	230	AC	4	NO-12A(9)	CO-8A(4)	NO-8A(4)	CO-8A(4)	NTC	NTC/DI	DI	-	-

[1]incl. 1x NTC probe

DIN rail

1

fig.	GEV No.	type	supply (V)	voltage	relay outputs	relay output 1	relay output 2	relay output 3	relay output 4	input 1	input 2	input 3	input 4	HACCP	real time clock	buzzer internal
1	379360[1]	AKOTIM-21TE	230	AC	1	NO-12A(9)	-	-	-	NTC	NTC	NTC	DI	-	-	-
1	379379[1]	AKOTIM-22TE	230	AC	2	NO-12A(9)	CO-8A(4)	-	-	NTC	NTC	NTC	DI	-	-	-
1	379380[1]	AKOTIM-21ARTEB	230	AC	2	NO-12A(9)	NO-5A(4)	-	-	NTC	NTC	DI	-	X	X	X
1	379361[1]	AKOTIM-23TE	230	AC	3	NO-12A(9)	CO-8A(4)	NO-5A(4)	-	NTC	NTC	NTC	DI	-	-	X
1	379381[1]	AKOTIM-22ARTEB	230	AC	3	NO-12A(9)	CO-8A(4)	NO-5A(4)	-	NTC	NTC	NTC	DI	X	X	X
1	379362[1]	AKOTIM-23ATE	230	AC	4	NO-12A(9)	CO-8A(4)	NO-5A(4)	NO-5A(4)	NTC	NTC	NTC	DI	-	-	X

[1]incl. 1x NTC probe

Find the complete and up-to-date range of products in our GEV Webshop

wall-mounted

120 x 80mm

1

174 x 94mm

2

214 x 214mm

3

fig.	GEV No.	type	supply (VAC)	relay outputs	relay output 1	relay output 2	relay output 3	relay output 4	relay output 5	relay output 6	input 1	input 2	input 3	input 4	input 5	HACCP	buzzer internal	interface RS485	printer
1	379127[1]	14615	230	1	NO-12A(9)	-	-	-	-	-	NTC	-	-	-	-	-	-	-	-
2	378042[1]	D14610	230	1	NO-12A(9)	-	-	-	-	-	NTC/PTC	-	-	-	-	-	-	-	-
2	378432[1]	D14622	230	2	NO-12A(9)	NO-5A(4)	-	-	-	-	NTC/PTC	-	-	-	-	-	-	-	-
2	378434[1]	D14632-C	230	3	NO-12A(9)	CO-8A(4)	NO-12A(4)	-	-	-	NTC/PTC	NTC/PTC	NTC/PTC/DI	DI	-	-	-	X	-
2	378041[1]	D14632	230	3	NO-12A(9)	CO-8A(4)	NO-5A(4)	-	-	-	NTC/PTC	NTC/PTC/DI	DI	-	-	-	-	-	-
2	378433[1]	D14622-C	90-240	3	NO-12A(9)	NO-5A(4)	NO-5A(4)	-	-	-	NTC/PTC	DI	DI	-	-	-	-	X	-
2	378052[1]	D14642	230	4	NO-12A(9)	CO-8A(4)	NO-5A(4)	NO-5A(4)	-	-	NTC/PTC	NTC/PTC	DI	DI	-	-	-	-	-
2	378435[1]	D14642-C	90-240	4	NO-12A(9)	CO-8A(4)	NO-5A(4)	NO-5A(4)	-	-	NTC	NTC	DI	DI	-	X	-	X	-
3	378053[1]	15613	230	3	NO-16A	NO-16A	CO-8A	-	-	-	NTC/PTC	DI	DI	-	-	X	X	X	-
3	378055[1]	15633	230	6	NO-16A	CO-16A	NO-8A	NO-16A	NO-16A	CO-8A	NTC	NTC	NTC	DI	DI	X	X	X	-

[1]incl. 1x NTC probe

214 x 214mm

4

fig.	GEV No.	type	supply (VAC)	relay outputs	relay output 1	relay output 2	relay output 3	relay output 4	relay output 5	relay output 6	input 1	input 2	input 3	input 4	input 5	HACCP	buzzer internal	interface RS485	printer
4	378054[1]	156131	100-240	3	NO-16A	NO-16A	CO-8A	-	-	-	NTC/PTC	DI	DI	-	-	X	X	X	X
4	378049[1]	156331	100-240	6	NO-16A	CO-16A	NO-8A	NO-16A	NO-16A	CO-8A	NTC	NTC	NTC	DI	DI	X	X	X	X

[1]incl. 1x NTC probe

data loggers

1

2

fig.	GEV No.	type	supply (VAC)	probe type	alarm outputs	alarm relay	inputs	HACCP	real time clock	buzzer internal	interface RS485	printer
1	379845[1]	15724	220-240	NTC/mA/DI	1	CO-8A(4)	2 channels	-	-	X	-	-
1	379846[1]	15725	220-240	NTC/mA/DI	1	CO-8A(4)	2 channels	-	-	X	X	-
2	378448[2]	15780	100-240	NTC/Pt100/Pt1000/mA/DI	2	CO-8A(4)	2 channels	-	-	X	X	-
2	378056[3]	15750	220-240	NTC/Pt100/Pt1000/mA/DI	2	CO-8A(4)	5 channels	-	-	X	X	-
2	378058[3]	15740	100-240	NTC/PT1000/mA/DI	2	CO-8A(4)	10 channels	-	-	X	X	-

[1]NTC probe/SD card/USB reader [2]incl. 2x NTC probe [3]incl. 5x NTC probe

3

fig.	GEV No.	type	supply (VAC)	probe type	alarm outputs	alarm relay	inputs	HACCP	real time clock	buzzer internal	interface RS485	printer
3	378449[1]	15782	100-240	NTC/Pt100/Pt1000/mA/DI	2	CO-8A(4)	2 channels	-	-	X	X	X
3	378057[2]	15752	100-240	NTC/Pt100/Pt1000/mA/DI	2	CO-8A(4)	5 channels	-	-	X	X	X
3	378059[2]	15742	100-240	NTC/PT1000/mA/DI	2	CO-8A(4)	10 channels	-	-	X	X	X

[1]incl. 2x NTC probe [2]incl. 5x NTC probe

Find the complete and up-to-date range of products in our GEV Webshop

data loggers with control function

1

2

fig.	GEV No.	type	supply (VAC)	relay outputs	relay output 1	relay output 2	relay output 3	relay output 4	relay output 5	relay output 6	input 1	input 2	input 3	input 4	input 5	HACCP	real time clock	buzzer internal	interface RS485	printer
1	378053[1]	15613	230	3	NO-16A	NO-16A	CO-8A	-	-	-	NTC/PTC	DI	DI	-	-	X	X	X	X	-
1	378055[1]	15633	230	6	NO-16A	CO-16A	NO-8A	NO-16A	NO-16A	CO-8A	NTC	NTC	NTC	DI	DI	X	X	X	X	-
2	378054[1]	156131	100-240	3	NO-16A	NO-16A	CO-8A	-	-	-	NTC/PTC	DI	DI	-	-	X	X	X	X	X
2	378049[1]	156331	100-240	6	NO-16A	CO-16A	NO-8A	NO-16A	NO-16A	CO-8A	NTC	NTC	NTC	DI	DI	X	X	X	X	X

[1]incl. 1x NTC probe

accessories

1

2

3

4

fig.	GEV No.	description
1	379189	thermal paper AKO type AKO-15703 suitable for AKO data logger
2	379815	software AKO type AKO-5010 AKONET for electronic controller with converter USB/RS485
3	403162	software AKO type SOFTRegis version 1.0.22
4	378078	transducer type AKO-80004A inlet Pt100 outlet 4-20mA AKO 6-32V voltage DC

5

fig.	GEV No.	description
5	401019	GSM module AKO type AKO-52043 suitable for AKO/Universal GSM/GPRS Modem 4. The AKO-52043 device is a 3G modem that allows the function of sending alarms via SMS messages in AKOnet and AKONet Trace software.

accessories

voltage supply

1

fig.	GEV No.	description
1	379159	transformer primary 230V secondary 24VDC type 80014A AKO output current 1A

converters

1

fig.	GEV No.	description
1	403139	transducer AKO type AKO-80039 inlet RS485 outlet USB suitable for AKO

CAREL

refrigeration controllers

built-in version

1

2

3

technical data:
voltage type AC

fig.	GEV No.	type	supply (V)	relay outputs	relay output 1	relay output 2	relay output 3	relay output 4	relay output 5	input 1	input 2	input 3	input 4	HACCP	buzzer internal
1	378474	PJEZS0P0E0	230	1	CO-12A(2)	-	-	-	-	NTC	-	-	-	-	X
1	378473	PJEZS000E0	230	1	CO-8A(4)	-	-	-	-	NTC	-	-	-	-	X
1	378475	PJEZC0P000	230	3	NO-12A(2)	CO-8A(4)	NO-8A(4)	-	-	NTC	NTC	-	-	-	X
2	378476	IR33S0EHA0	230	1	CO-16A(4)	-	-	-	-	NTC	NTC	DI		-	X
2	378477	IR33Y0EHA0	230	2	NO-12A(10)	CO-8A(4)	-	-	-	NTC	NTC	DI	-	-	X
2	378478	IR33F0HN00	115/230	3	CO-12A(2)	CO-8A(4)	CO-8A(4)	-	-	NTC	NTC	DI	DI	-	X
2	378145[1]	IR33C0HB00	115/230	4	CO-12A(2)	CO-8A(4)	CO-8A(4)	CO-8A(4)	-	NTC	NTC	DI	DI	X	X
3	378479	PB00S0EA00	230	2	CO-8A(4)	CO-8A(4)	-	-	-	NTC	NTC	DI	DI	-	X
3	378480	PB00F0HA00	115-230	4	CO-12A(2)	CO-8A(4)	NO-8A(4)	NO-8A(4)	-	NTC	NTC	DI	DI	-	X
3	378481	PB00C0HB00	115-230	4	NO-10A(10)	CO-12A(2)	NO-8A(4)	CO-8A(4)	-	NTC	NTC	DI	DI	X	X

[1]with IR/RS-485 interface

Find the complete and up-to-date range of products in our GEV Webshop

DIN rail

1

technical data:
supply 115-230V
voltage type AC

fig.	GEV No.	type	relay outputs	relay output 1	relay output 2	relay output 3	relay output 4	input 1	input 2	input 3	input 4	buzzer internal	interface RS485
1	378482	DN33S0HA00	2	NO-10A(10)	CO-8A(4)	-	-	NTC	NTC	DI	DI	X	-
1	378483	DN33C0HB00	4	NO-10A(10)	CO-12A(2)	CO-8A(4)	CO-8A(4)	NTC	DI	DI	DI	X	IR/RS-485

controllers for walk-in fridges

1

2

technical data:
supply 230V
voltage type AC

fig.	GEV No.	type	relay outputs	relay output 1	relay output 2	relay output 3	relay output 4	relay output 5	input 1	input 2	input 3	input 4	buzzer internal	interface RS485
1	378146	MD33D5FB00	5	CO-30A(12)	CO-16A(8)	CO-10A(5)	CO-10A(5)	CO-16A(3)	NTC	DI	DI	DI	X	IR/RS-485
2	378176	MD33D5EN00	5	CO-30A(12)	CO-16A(8)	CO-10A(5)	CO-10A(5)	CO-16A(3)	NTC	DI	DI	DI	X	-

DIXELL

refrigeration controllers

built-in version

1

2

3

fig.	GEV No.	type	supply (V)	voltage	relay output 1	relay output 2	relay output 3	relay output 4	relay output 5	relay output 6	input 1	input 2	input 3	input 4	buzzer internal
1	379468	XR20CX-0P1C1	12	AC/DC	NO-20A(8)	-	-	-	-	-	NTC/PTC	DI	-	-	X
1	379661	XR20CX-0N0C0	12	AC/DC	CO-8A(3)	-	-	-	-	-	NTC/PTC	DI	-	-	-
1	379996	XR20CX-5N0C0	230	AC	CO-8A(3)	-	-	-	-	-	NTC/PTC	DI	-	-	-
1	378000	XR20CX-5N0C1	230	AC	NO-20A(8)	-	-	-	-	-	NTC/PTC	NTC/PTC/DI	-	-	-
1	378384	XR40CX-5N0C1	230	AC	NO-20A(8)	CO-8A(3)	-	-	-	-	NTC/PTC	NTC/PTC	DI	-	-
1	379665	XR30CX-5N0C1	230	AC	NO-20A(8)	CO-8A(3)	-	-	-	-	NTC/PTC	DI	-	-	-
1	379664	XR30CX-5N0C0	230	AC	NO-8A(3)	CO-8A(3)	-	-	-	-	NTC/PTC	DI	-	-	-
1	402144	XR60CX -5N0C1	230	AC	NO-20A(8)	CO-8A(3)	NO-5A(2)	-	-	-	NTC/PTC	NTC/PTC	DI	-	-
1	378112	XR60CX-0N0C0	12	AC/DC	NO-8A(3)	CO-8A(3)	NO-8A(3)	-	-	-	NTC/PTC	NTC/PTC	DI	-	-
1	378224	XR60CX-5N0C0	230	AC	NO-8A(3)	CO-8A(3)	NO-8A(3)	-	-	-	NTC/PTC	NTC/PTC	DI	-	-
1	378221	XR70CX-5N0C3	230	AC	NO-16A(5)	CO-8A(3)	NO-5A(2)	NO-8A(3)	-	-	NTC/PTC	NTC/PTC	DI	-	-
2	378388	XW220L-5N0C1	230	AC	NO-20A(8)	NO-16A(5)	-	-	-	-	NTC	NTC	DI	DI	X
2	378228	XW20L-5N0C1	230	AC	NO-20A(8)	CO-8A(3)	-	-	-	-	NTC/PTC	DI	-	-	-
2	379655	XW40L-5N0C1	230	AC	NO-20A(8)	CO-8A(3)	NO-8A(3)	-	-	-	NTC/PTC	NTC/PTC	DI	DI	-
2	378389	XW230L-5N0C0	230	AC	NO-20A(8)	NO-16A(5)	NO-8A(3)	NO-16A(5)	-	-	NTC	NTC	DI	DI	X
2	378229	XW60L-5N0C1	230	AC	CO-20A(8)	CO-8A(3)	NO-8A(3)	NO-8A(3)	-	-	NTC/PTC	NTC/PTC	DI	-	-
2	402036	XW260L-5N0C0	230	AC	NO-20A(8)	NO-8A(3)	NO-8A(3)	NO-16A(5)	-	-	NTC	NTC	DI	DI	X
2	378386	XW264L-5N0C5	230	AC	NO-20A(8)	CO-8A(3)	CO-8A(3)	NO-8A(3)	NO-16A(5)	-	NTC	NTC	DI	DI	X
2	378456	XB570L-5N1C1-X	230	AC	NO-20A(12)	NO-8A(3)	NO-8A(3)	NO-16A(3)	NO-16A(3)	NO-8A(3)	NTC/PTC	NTC/PTC	NTC/PTC	NTC/PTC	X
2	378254	XB570L-5R0C1-X	230	AC	NO-20A(8)	NO-8A(3)	NO-8A(3)	NO-16A(5)	NO-8A(3)	NO-16A(5)	NTC	NTC	DI	DI	X
2	379657	XW271L-5N0C0	230	AC	NO-20A(8)	NO-8A(3)	NO-8A(3)	NO-16A(5)	NO-8A(3)	NO-16A(5)	NTC	NTC	NTC	DI	-
3	378222	XW20LS-5N0C1	230	AC	NO-20A(8)	NO-8A(3)	-	-	-	-	NTC/PTC	DI	-	-	-
3	378387	XW40LS-5N0C1	230	AC	NO-20A(8)	NO-8A(3)	NO-8A(3)	-	-	-	NTC/PTC	NTC/PTC	DI	-	-
3	378223	XW60LS-5N0C1	230	AC	NO-20A(8)	NO-8A(3)	NO-8A(3)	-	-	-	NTC/PTC	NTC/PTC	DI	-	-
3	402193	AI002AA075	230	AC	NO-20A(8)	NO-8A(3)	NO-8A(3)	-	-	-	NTC/PTC	NTC/PTC	-	-	-

Find the complete and up-to-date range of products in our GEV Webshop

4

fig.	GEV No.	type	supply (V)	voltage	relay output 1	relay output 2	relay output 3	relay output 4	relay output 5	relay output 6	input 1	input 2	input 3	input 4	buzzer internal
4	378377	XW20VS-5N0C0	230	AC	NO-16A(8)	CO-16A(5)	-	-	-	-	NTC/PTC	DI	-	-	-
4	378422	XW60VS-5N0C0	230	AC	NO-16A(8)	CO-16A(5)	NO-8A(3)	-	-	-	NTC/PTC	NTC/PTC	NTC/PTC	DI	-
4	378423	XW60V-5N0C1	230	AC	NO-20A(8)	CO-8A(3)	NO-8A(3)	NO-16A(5)	-	-	NTC/PTC	NTC/PTC	DI	-	-

built-in version 2-piece

1

2

fig.	GEV No.	type	supply (V)	voltage	relay outputs	relay output 1	relay output 2	relay output 3	relay output 4	input 1	input 2	input 3	input 4
1	378442	T820-000C0	-	-	-	-	-	-	-	-	-	-	-
2	378385	XW270K-5N0C0	230	AC	6	NO-20A(8)	NO-8A(3)	NO-8A(3)	NO-16A(5)	NTC	NTC	DI	DI

3

4

5

fig.	GEV No.	type	supply (V)	voltage	relay outputs	relay output 1	relay output 2	relay output 3	relay output 4	input 1	input 2	input 3	input 4
3	379658	T620-000C0	-	-	-	-	-	-	-	-	-	-	-
4	378226	V620-000C0	-	-	-	-	-	-	-	-	-	-	-
5	379660	XW220K-5N0C0	230	AC	2	NO-20A(8)	NO-16A(5)	-	-	NTC	NTC	DI	DI

6

fig.	GEV No.	type	supply (V)	voltage	relay outputs	relay output 1	relay output 2	relay output 3	relay output 4	input 1	input 2	input 3	input 4
6	378225	XW260K-5N0C0	230	AC	4	NO-20A(8)	NO-16A(5)	NO-16A(5)	NO-16A(5)	NTC	NTC	DI	DI

EKTRON

refrigeration controllers

built-in version

1

2

fig.	GEV No.	type	supply (V)	voltage	relay outputs	relay output 1	relay output 2	relay output 3	input 1	input 2
1	378034	REK31ED-0021	230	AC	1	CO-8A(4)	-	-	NTC/PTC	NTC/PTC
1	378118	REK33-1021	230	AC	3	NO-8A(4)	NO-8A(4)	NO-8A(4)	PTC	PTC
1	402020	REK33-0020	12	AC/DC	3	NO-8A(4)	NO-8A(4)	NO-8A(4)	PTC	PTC
2	379542	TEK31-0010	12	AC/DC	1	CO-8A(4)	-	-	PTC	-
2	379397	DEK31-1000A	12	AC/DC	2	CO-8A(4)	NO-8A(4)	-	Pt100	-

ELIWELL

refrigeration controllers

built-in version

1

fig.	GEV No.	model	supply (V)	voltage	relay outputs	relay output 1	relay output 2	relay output 3	relay output 4	input 1	input 2	input 3	input 4
1	378298	IDP17D0700000	230	AC	1	NO-12A(12)	-	-	-	NTC/PTC/Pt1000	-	-	-
1	379837	IDP17D0300000	12	AC/DC	1	NO-12A(12)	-	-	-	NTC/PTC/Pt1000	-	-	-
1	378380	ICP22I0750000	230	AC	2	CO-8A(3)	CO-8A(3)	-	-	mA	-	-	-
1	378304	IDP29DB700000	230	AC	2	NO-12A(12)	CO-8A(4)	-	-	NTC/PTC/Pt1000	NTC/PTC/Pt1000	DI	-
1	378437	IDP29DB300000	12	AC/DC	2	NO-12A(12)	CO-8A(4)	-	-	NTC/PTC/Pt1000	NTC/PTC/Pt1000	DI	-
1	378299	IDP2EDB700000	230	AC	3	NO-12A(12)	CO-8A(4)	NO-5A(2)	-	NTC/PTC/Pt1000	NTC/PTC/Pt1000	NTC/PTC/Pt1000	DI
1	379836	IDP2EDB300000	12	AC/DC	3	NO-12A(12)	CO-8A(4)	NO-5A(2)	-	NTC/PTC/Pt1000	NTC/PTC/Pt1000	NTC/PTC/Pt1000	DI
1	378436	IDP24DB700000	230	AC	4	NO-12A(12)	CO-8A(4)	NO-5A(2)	NO-5A(2)	NTC/PTC/Pt1000	NTC/PTC/Pt1000	DI	-

Table continues overleaf

Find the complete and up-to-date range of products in our GEV Webshop

2

3

fig.	GEV No.	model	supply (V)	voltage	relay outputs	relay output 1	relay output 2	relay output 3	relay output 4	input 1	input 2	input 3	input 4
2	379572	ID12C00TCD300	12	AC/DC	2	NO-8A(3)	CO-8A(3)	-	-	NTC/PTC	-	-	-
2	379573	ID12C00TCD700	230	AC	2	NO-8A(3)	CO-8A(3)	-	-	NTC/PTC	-	-	-
2	379580	ID34DF0XCD300	12	AC/DC	4	CO-8A(3)	NO-8A(3)	NO-8A(3)	NO-5A(2)	NTC/PTC	NTC/PTC	DI	DI
2	378136	ID24DB0XCD300	12	AC/DC	4	NO-8A(3)	NO-8A(3)	NO-5A(2)	NO-5A(2)	NTC/PTC	NTC/PTC	-	-
3	378142	WC12DI0TQD700	230	AC	2	NO-20A(12)	NO-8A(3)	-	-	NTC/PTC	NTC/PTC	DI	-
3	378141	WC23DI0TQD780	230	AC	3	NO-20A(12)	NO-8A(3)	NO-8A(3)	-	NTC/PTC	NTC/PTC	DI	-
3	379884	WC24DI0TCD790	230	AC	4	NO-20A(12)	CO-12A(8)	NO-8A(3)	NO-8A(3)	NTC	NTC	DI	-
3	378139	WC25DI0TCD790	230	AC	5	NO-12A(12)	CO-12A(8)	NO-8A(3)	NO-8A(3)	NTC/PTC	NTC/PTC	DI	-

built-in version 2-piece

1

2

fig.	GEV No.	type	model	relay outputs	relay output 1	relay output 2	relay output 3	relay output 4	relay output 5	relay output 6	input 1	input 2	input 3	input 4	buzzer internal	interface RS485
1	379398	IS972LX	IS23DI0XCD000	-	-	-	-	-	-	-	DI	-	-	-	-	-
2	379533	EWEM233	DS340000DC700	3	NO-15A(12)	CO-10A(7)	NO-16A(8)	-	-	-	NTC/PTC	NTC/PTC	-	-	-	X

3

4

fig.	GEV No.	type	model	relay outputs	relay output 1	relay output 2	relay output 3	relay output 4	relay output 5	relay output 6	input 1	input 2	input 3	input 4	buzzer internal	interface RS485
3	378138	IS974LX	IS24DI0XCD000	-	-	-	-	-	-	-	DI	-	-	-	-	-
4	378140	EWEM243	DS440000DC702	4	NO-15A(12)	CO-10A(7)	NO-16A(8)	NO-16A(8)	-	-	NTC/PTC	NTC/PTC	-	-	-	X

accessories

1

fig.	GEV No.	description
1	379534	connection cable type EC0000110 connection RJ45 L 1000mm for ELIWELL/universal

DIN rail

1

fig.	GEV No.	type	model	supply (V)	voltage	relay outputs	relay output 1	relay output 2	relay output 3	relay output 4	input 1	input 2	input 3	input 4	HACCP	real time clock	buzzer internal	interface RS485
1	378205	EWDR981	DR26DI0TCD700	230	AC	1	CO-15A(12)	-	-	-	NTC/PTC	NTC/PTC	DI	DI	-	-	-	-
1	378378	EWDR983/CSLX	DR38CF0SCD700	230	AC	2	CO-15A(12)	CO-8A(3)	-	-	NTC/PTC	NTC/PTC	DI	DI	-	-	-	X
1	378206	EWDR985	DR34DI0TCD700	230	AC	4	CO-15A(12)	CO-8A(3)	NO-8A(3)	NO-8A(3)	NTC/PTC	NTC/PTC	NTC/PTC	DI	-	-	-	-
1	378379	EWDR985/CSLX	DR35DR0SCD700	230	AC	4	CO-15A(12)	CO-8A(3)	NO-8A(3)	NO-8A(3)	NTC/PTC	NTC/PTC	NTC/PTC	DI	-	-	-	X

wall-mounted

1

fig.	GEV No.	type	model	supply (V)	voltage	relay outputs	relay output 1	input 1	input 2
1	378217	WM961/A	WM1GDL00BHH00	230	AC	1	CO-15A(12)	NTC/PTC	DI

Find the complete and up-to-date range of products in our GEV Webshop

controllers for walk-in fridges

1

2

technical data:
type EWRC 500 NT 2HP
supply 230V
voltage type AC

fig.	GEV No.	model	relay outputs	relay output 1	relay output 2	relay output 3	relay output 4	relay output 5	input 1	input 2	input 3	input 4	input 5	HACCP	real time clock	interface RS485
1	378447	RTC HACCP 4D W/B	5	NO-12A(12)	NO-16A(8)	CO-8A(3)	NO-16A(8)	CO-8A(3)	NTC/PTC	NTC/PTC	NTC/PTC	DI	DI	X	X	X
2	378406		5	NO-12A(12)	NO-8A(4)	NO-8A(4)	NO-8A(8)	NO-8A(4)	NTC/PTC	NTC/PTC	NTC/PTC	DI	DI	-	-	-
2	378316	RCS3UDLX20700	5	NO-12A(12)	NO-8A(8)	NO-8A(4)	NO-8A(4)	NO-8A(4)	NTC/PTC	NTC/PTC	NTC/PTC	DI	DI	-	-	-

EVCO - EVERY CONTROL

refrigeration controllers

built-in version

1

fig.	GEV No.	type	supply (V)	voltage	relay outputs	relay output 1	relay output 2	relay output 3	relay output 4	input 1	input 2	input 3	input 4	buzzer internal
1	379647	EVKB21N7VCXS	230	AC	1	CO-16A(5)	-	-	-	NTC	DI	-	-	-
1	378126	EVK201N7	230	AC	1	CO-16A(5)	-	-	-	NTC/PTC	-	-	-	-
1	378147	EVK211N3VXBS	12/24	AC/DC	1	CO-16A(5)	-	-	-	PTC/NTC	-	-	-	X
1	378148	EVK211N7VXBS	230	AC	1	CO-16A(5)	-	-	-	PTC/NTC	-	-	-	X
1	379648	EVKB31N7VCXS	230	AC	1	NO-30A(12)	-	-	-	NTC	DI	-	-	-
1	378149	EVK212N3VXBS	12/24	AC/DC	2	NO-16A(5)	CO-8A(4)	-	-	NTC/PTC	NTC/PTC	DI	-	X
1	378150	EVK202N7VXBS	230	AC	2	NO-16A(5)	CO-8A(4)	-	-	NTC/PTC	NTC/PTC	-	-	X
1	378113	EVK213N2	12/24	AC/DC	3	NO-16A(5)	CO-8A(4)	NO-8A(4)	-	NTC/PTC	NTC/PTC	DI	-	-
1	378153	EVK213N3VXBS	12/24	AC/DC	3	NO-16A(5)	CO-8A(4)	NO-8A(4)	-	NTC/PTC	NTC/PTC	DI	-	X
1	378154	EVK203N7VXBS	230	AC	3	NO-16A(5)	CO-8A(4)	NO-8A(4)	-	NTC/PTC	NTC/PTC	DI	-	X
1	379649	EVKB33N7VXXS	230	AC	3	NO-30A(12)	CO-8A(4)	NO-8A(4)	-	NTC	NTC	DI	-	-
1	378308	EVKB23N7	230	AC	3	NO-8A(4)	CO-8A(4)	NO-5A(4)	-	NTC	NTC	DI	-	-

Table continues overleaf

2

3

fig.	GEV No.	type	supply (V)	voltage	relay outputs	relay output 1	relay output 2	relay output 3	relay output 4	input 1	input 2	input 3	input 4	buzzer internal
2	378443	EV3X21N7 Touch	230	AC	1	NO-16A(5)	-	-	-	NTC	DI	-		-
2	378444	EV3B31N7 Touch	230	AC	1	NO-30A(12)	-	-	-	NTC	DI	-	-	-
2	378445	EV3B33N7 Touch	230	AC	3	NO-30A(12)	CO-8A(4)	NO-5A(2)	-	NTC	NTC	DI	-	-
3	378360	EVR232N7	230	AC	2	NO-30A(12)	CO-8A(4)	-	-	NTC/PTC	NTC/PTC	DI	-	-
3	378357	EVR204N7	230	AC	4	NO-16A(5)	CO-8A(4)	NO-8A(4)	NO-8A(4)	NTC/PTC	NTC/PTC	DI	-	-

DIN rail

1

fig.	GEV No.	type	supply (V)	voltage	relay outputs	relay output 1	relay output 2	relay output 3	input 1	input 2	input 3	buzzer internal
1	378157	EV6221P7VXBS	230	AC	1	CO-16A(5)	-	-	NTC/PTC	DI	DI	X
1	378160	EV6223P7VXBS	230	AC	3	NO-16A(5)	CO-8A(4)	CO-8A(4)	NTC/PTC	NTC/PTC	DI	X

Find the complete and up-to-date range of products in our GEV Webshop

controllers for walk-in fridges

1

2

fig.	GEV No.	type	supply (V)	voltage	relay outputs	relay output 1	relay output 2	relay output 3	relay output 4	relay output 5	relay output 6	input 1	input 2	input 3	input 4	interface RS485
1	378354[1]	EVB1206N9	230	AC	6	NO-16A(5)	NO-30A(12)	NO-16A(5)	CO-8A(4)	NO-30A(12)	NO-8A(4)	NTC/PTC/Pt1000	NTC/PTC/Pt1000	DI	DI	X
2	379842	ASQX214000	230	AC	4	CO-8A(4)	NO-8A(4)	NO-8A(4)	NO-30A(12)	-	-	NTC/PTC	NTC/PTC	DI	DI	-

[1]no residual-current device (RCD)

data loggers

1

2

fig.	GEV No.	type	supply (V)	voltage	relay outputs	relay output 1	relay output 2	relay output 3	input 1	input 2	HACCP	real time clock	buzzer internal	interface RS485
1	379455	PR 100A X9S001	110-240	AC	-	-	-	-	PTC/NTC/TC(J,K)/Pt100,4-20mA	DI	X	-	-	X
2	378446[1,2]	EVB1216N9XLC	230	AC	6	NO-16A(5)	NO-30A(12)	CO-8A(4)	NTC/PTC/Pt1000	NTC/PTC/Pt1000	X	X	X	X

[1]data logger, incl. 2x NTC probes [2]data logger incl. control function

accessories

1

fig.	GEV No.	description
1	381303	adapter for conversion of 150x30mm to 138x29mm mounting pos. inner

LAE

refrigeration controllers

built-in version

1

2

fig.	GEV No.	type	supply (V)	voltage	relay outputs	relay output 1	relay output 2	relay output 3	relay output 4	relay output 5	input 1	input 2	input 3	input 4	input 5	interface RS485
1	378419	AT1-5AS1E-G	230	AC	1	NO-16A(4)	-	-	-	-	NTC/PTC	-	-	-	-	-
1	379762	AT1-5AS5E-G	230	AC	1	NO-16A(8)	-	-	-	-	NTC/PTC	-	-	-	-	-
1	378420	AT1-5AS2E-G	230	AC	2	NO-16A(4)	NO-7A(2)	-	-	-	NTC/PTC	-	-	-	-	-
1	378290	AT1-5BS6E-BG	230	AC	2	NO-16A(8)	NO-7A(2)	-	-	-	NTC/PTC	NTC/PTC	DI	-	-	X
1	379852	AT1-5AS4D-G	12	AC/DC	2	NO-16A(5)	NO-4A(1)	-	-	-	NTC/PTC	-	-	-	-	-
1	379763	AT1-5BS4E-BG	230	AC	2	NO-16A(5)	NO-7A(2)	-	-	-	NTC/PTC	NTC/PTC	DI	-	-	X
1	379764	AT2-5BS4E-AG	230	AC	3	NO-16A(5)	NO-7A(2)	NO-7A(2)	-	-	NTC/PTC	NTC/PTC	DI	-	-	-
1	379760	AR2-5C24W-BG	115-230	AC	4	NO-12A(5)	NO-7A(2)	NO-7A(2)	NO-7A(2)	-	NTC/PTC	NTC/PTC	NTC/PTC	DI	DI	X
2	378184	LCD32Q4E-C	230	AC	4	NO-20A(6)	NO-12A(4)	NO-8A(3)	CO-8A(3)	-	NTC	NTC	DI	DI	-	X
2	379772	AD-32S35W-B	230	AC	5	CO-16A(5)	NO-16A(4)	NO-7A(2)	NO-7A(2)	NO-7A(2)	NTC	NTC	DI	DI	-	X

built-in version 2-piece

1

fig.	GEV No.	type	supply (V)	voltage	relay outputs	relay output 1	relay output 2	relay output 3	relay output 4	relay output 5	relay output 6	input 1	input 2	input 3	interface RS485
1	378253	BD1-28C1S5W-B	230	AC	5	NO-16A(12)	NO-16A(4)	NO-16A(4)	NO-7A(2)	NO-7A(2)	-	NTC	NTC	DI	X
1	379803	BR1-28C1S5W-B	230	AC	5	NO-16A(12)	NO-16A(4)	NO-16A(4)	NO-7A(2)	NO-7A(2)	-	NTC	NTC	DI	X

2

3

4

fig.	GEV No.	type	supply (V)	voltage	relay outputs	relay output 1	relay output 2	relay output 3	relay output 4	relay output 5	relay output 6	input 1	input 2	input 3	interface RS485
2	379771	LCD5-S	-	-	-	-	-	-	-	-	-	-	-	-	-
3	403458	BIT25B1S3E-A	230	AC	3	NO-20A(8)	NO-16A(4)	NO-7A(2)	-	-	-	NTC	NTC	DI	X
4	403459	FC06-20M01													

Find the complete and up-to-date range of products in our GEV Webshop

5

6

7

fig.	GEV No.	type	supply (V)	voltage	relay outputs	relay output 1	relay output 2	relay output 3	relay output 4	relay output 5	relay output 6	input 1	input 2	input 3	interface RS485
5	379483	SMD34RU	-	-	-	-	-	-	-	-	-	-	-	-	-
6	379484	SSD90B35E-C	230	AC	6	NO-20A(6)	CO-12A(4)	NO-8A(3)	NO-8A(3)	CO-8A(3)	NO-7A(2)	PTC	PTC	DI	X
7	403465	FC10-20M01													

DIN rail

1

fig.	GEV No.	type	supply (V)	voltage	relay outputs	relay output 1	relay output 2	relay output 3	relay output 4	relay output 5	input 1	input 2	input 3	input 4	interface RS485
1	379761	AR2-27C15E-BG	230	AC	5	NO-15A(5)	NO-7A(2)	NO-7A(2)	CO-7A(2)	NO-7A(2)	NTC/PTC	NTC/PTC	DI	DI	X

wall-mounted

1

fig.	GEV No.	type	supply (V)	voltage	relay output 1	relay output 2	input 1	interface RS485
1	379769	LDU2W2E-EG	230	AC	NO-16A(4)	CO-8A(3)	NTC	X

STÖRK-TRONIC

refrigeration controllers

built-in version

1

2

3

4

fig.	GEV No.	type	supply (V)	voltage	relay outputs	relay output 1	relay output 2	relay output 3	input 1	input 2	input 3
1	378109	ST58-GB1TA.10	230	AC	1	CO-12A(2.2)	-	-	PTC/Pt100	-	-
2	379304	ST64-31.10	230	AC	1	NO-12A(6)	-	-	Pt100	-	-
2	379305	ST64-31.10	230	AC	1	NO-12A(6)	-	-	PTC	-	-
3	379339	ST73-31.10	230	AC	1	NO-12A(6)	-	-	Pt100	-	-
3	379515	ST73-31.10	230	AC	1	NO-12A(6)	-	-	PTC	-	-
4	378161	ST710-JB1JA.10	230	AC	1	CO-12A(2.2)	-	-	Pt100	DI	-
4	378162	ST710-JB1JA.10	230	AC	1	CO-12A(2.2)	-	-	PTC	DI	-
4	379626	ST710-KSKA.12	230	AC	2	NO-12A(2.2)	NO-5A(1.5)	-	PTC	PTC	-

5

6

7

fig.	GEV No.	type	supply (V)	voltage	relay outputs	relay output 1	relay output 2	relay output 3	input 1	input 2	input 3
5	379703	ST70-36.11	12/24	AC/DC	1	NO-7A(1)	-	-	PTC	-	-
5	379704	ST70-36.13	12/24	AC/DC	3	NO-5A(1.5)	NO-5A(1.5)	NO-5A(1.5)	PTC	PTC	DI
6	378163	ST121-JA1TA.10	230	AC	1	NO-16A(6)	-	-	PTC/Pt100	-	-
7	378164	ST501-JA1TA.10	230	AC	1	NO-12A(6)	-	-	PTC/Pt100	-	-

Find the complete and up-to-date range of products in our GEV Webshop

TECNOLOGIC

refrigeration controllers

built-in version

1

2

3

4

fig.	GEV No.	type	supply (V)	voltage	relay outputs	relay output 1	relay output 2	relay output 3	relay output 4	input 1	input 2	input 3
1	379264	E51-DNS	230	AC	1	CO-16A(6)	-	-	-	NTC	-	-
2	378438	TLE20DHK	230	AC	1	NO-20A(12)	-	-	-	NTC/PTC	-	-
2	378232	TLE20	230	AC	1	CO-16A(6)	-	-	-	NTC/PTC	-	-
2	379209	TLY28F	12	AC/DC	2	NO-16A(6)	CO-8A(3)	-	-	NTC/PTC	NTC/PTC	DI
2	379210	TLY29F	12	AC/DC	3	NO-16A(6)	CO-8A(3)	CO-5A(2)	-	NTC/PTC	NTC/PTC	DI
2	378439	TLY25H	100-240	AC/DC	4	NO-16A(6)	NO-5A(2)	NO-5A(2)	NO-5A(2)	NTC/PTC	NTC/PTC	DI
3	379363	TLY28H	100-240	AC	2	NO-16A(6)	CO-8A(3)	-	-	NTC/PTC	NTC/PTC	DI
3	379329	TLY29H	100-240	AC	3	NO-16A(6)	CO-8A(3)	CO-5A(2)	-	NTC/PTC	NTC/PTC	DI
3	379991	TLY26---R	12	AC/DC	4	NO-16A(6)	CO-8A(3)	CO-8A(3)	CO-8A(3)	NTC/PTC	NTC/PTC	DI
4	378440	TLW24	100-240	AC	1	NO-16A(15)	-	-	-	NTC/PTC	DI	DI
4	378441	TLW24RRS	100-240	AC	4	NO-16A(15)	CO-8A(3)	NO-8A(3)	NO-16A(6)	NTC/PTC	NTC/PTC	DI

DIN rail

1

fig.	GEV No.	type	supply (V)	voltage	relay outputs	relay output 1	relay output 2	relay output 3	relay output 4	input 1	input 2	input 3
1	379501	TLY35HSR	100-240	AC	4	CO-16A(6)	CO-8A(3)	CO-8A(3)	NO-8A(3)	NTC/PTC	NTC/PTC	DI

wall-mounted

1

fig.	GEV No.	type	supply (V)	voltage	relay outputs	relay output 1	relay output 2	relay output 3	input 1	input 2	input 3
1	378233	W09 HRB	100-240	AC	1	CO-8A(3)	-	-	NTC/PTC	-	-
1	378234	W09YHRRRB	100-240	AC	3	NO-14A(6)	CO-8A(3)	NO-4A(2)	NTC/PTC	NTC/PTC	DI

TEMPOMATIC

electronic thermometers

mounting measurements 66.5x49.5mm

1

fig.	GEV No.	type	volt. (V)	voltage	measuring range (°C)	measuring input
1	379262[1]	K400-4-300	230	AC	0 up to +250	NTC

[1]incl. 1x NTC probe

probes

universal probes

temperature probes

1

technical data:
probe type NTC 2kOhm

fig.	GEV No.	cable	probe (°C)	probe	CL (m)
1	379784	TP	-40 up to +110	ø6x35mm	2

1

technical data:
probe type NTC 10kOhm

fig.	GEV No.	cable	probe (°C)	probe	CL (m)
1	379342	PVC	-20 up to +80	ø6x25mm	1.5
1	379057	PVC	-20 up to +80	ø6x25mm	3
1	378194	PVC	-20 up to +80	ø7x24.5mm	1.5

Find the complete and up-to-date range of products in our GEV Webshop

2

technical data:
probe type NTC 10kOhm

fig.	GEV No.	cable	probe (°C)	probe	CL (m)
2	379860	PVC	-20 up to +80	ø6x40mm	1.5
2	379458	silicone	-40 up to +110	ø6x40mm	1.5
2	379343	silicone	-40 up to +110	ø6x40mm	3

3

technical data:
probe type NTC 10kOhm

fig.	GEV No.	cable	probe (°C)	probe	CL (m)
3	379160	TP	-40 up to +110	ø6x14mm	1.5
3	379169	TP	-40 up to +110	ø6x14mm	2
3	379630	TP	-40 up to +110	ø6x14mm	2.5
3	379161	TP	-40 up to +110	ø6x14mm	3
3	379162	TP	-40 up to +110	ø6x14mm	6

4

technical data:
probe type NTC 10kOhm

fig.	GEV No.	cable	probe (°C)	probe	CL (m)
4	378261	TP	-40 up to +110	ø6x35mm	3

1

technical data:
probe type NTC 47kOhm

fig.	GEV No.	cable	probe (°C)	probe	CL (m)
1	379149[1]	glass fibre	-40 up to +125	ø6x35mm	1.45

[1]with coded plug for thermometer 379262

1

technical data:
probe type Pt100

fig.	GEV No.	cable	probe (°C)	probe	CL (m)
1	379785	silicone	-100 up to 450	ø6x100mm	1.5
1	379786	silicone	-100 up to 450	ø6x100mm	3

2

technical data:
probe type Pt100

fig.	GEV No.	cable	probe (°C)	probe	CL (m)
2	379058[1]	silicone	-100 up to 450	ø6x100mm	2.8

[1]3-wire

3

technical data:
probe type Pt100

fig.	GEV No.	cable	probe (°C)	probe	CL (m)
3	379439	silicone	-50 up to +250	ø6x50mm	2.5

1

technical data:
probe type PTC 1kOhm

fig.	GEV No.	cable	probe (°C)	probe	CL (m)
1	379142	PVC	-50 up to +150	ø6x30mm	1.5
1	379199	PVC	-50 up to +150	ø6x30mm	5
1	379637	PVC	-50 up to +150	ø6x35mm	2
1	379052	silicone	-50 up to +150	ø6x40mm	1.5
1	379064	silicone	-50 up to +150	ø6x40mm	3

2

technical data:
probe type PTC 1kOhm

fig.	GEV No.	cable	probe (°C)	probe	CL (m)
2	379053	PVC	-50 up to +150	ø6x30mm	3

3

technical data:
probe type PTC 1kOhm

fig.	GEV No.	cable	probe (°C)	probe	CL (m)
3	379783	PVC	-50 up to +150	ø6x35mm	2

4

technical data:
probe type PTC 1kOhm

fig.	GEV No.	cable	probe (°C)	probe	CL (m)
4	378067	silicone	-50 up to +150	ø6x40mm	2
4	378068	silicone	-50 up to +150	ø6x40mm	7
4	378069	silicone	-50 up to +150	ø6x40mm	15
4	378070	silicone	-50 up to +150	ø6x40mm	30

5

technical data:
probe type PTC 1kOhm

fig.	GEV No.	cable	probe (°C)	probe	CL (m)
5	379781	TP	-50 up to +150	ø6x14mm	1.5
5	379782	TP	-50 up to +150	ø6x14mm	3

humidity probes

1 2

technical data:
outlet 4-20mA

fig.	GEV No.	humidity range (%)	supply (VDC)	probe	CL (m)
1	403390	0-99	9-28	ø17.5x120mm	-
2	379174	10-95	8-35	ø17.5x120mm	-

3

technical data:
outlet 4-20mA

fig.	GEV No.	humidity range (%)	supply (VDC)	probe	CL (m)
3	378383	15-90	8-28	ø24x105mm	1.5

4

technical data:
outlet 4-20mA

fig.	GEV No.	humidity range (%)	supply (VDC)	probe	CL (m)
4	378076	5-95	8-24	ø20x180mm	1.5

pressure probes

1

fig.	GEV No.	pressure (bar)	supply (VDC)	outlet	TS	CL (m)
1	378381	0.5-8	8 - 32	4-20mA	1/4”	2
1	378382	0-30	8 - 32	4-20mA	1/4”	2

2

fig.	GEV No.	pressure (bar)	supply (VDC)	outlet	TS	CL (m)
2	379118	0.5-8	8-28	4-20mA	7/16”	2
2	379119	0-30	8-28	4-20mA	7/16”	2

core probes

1

technical data:
cable PVC
cable length 5m

fig.	GEV No.	probe type	probe (°C)	probe
1	378391	NTC 10kOhm	-40 up to +120	ø4x100mm
1	378393	Pt100	-40 up to +120	ø4x100mm
1	378392	Pt1000	-40 up to +120	ø4x100mm
1	378390	PTC 1kOhm	-50 up to +150	ø4x100mm

2

technical data:
cable PVC
cable length 5m

fig.	GEV No.	probe type	probe (°C)	probe
2	378396[1]	Pt100	-40 up to +120	ø4x100mm
2	378395[1]	Pt1000	-40 up to +120	ø4x100mm
2	378394[1]	PTC 1kOhm	-40 up to +120	ø4x100mm

[1]heated

Find the complete and up-to-date range of products in our GEV Webshop

3

technical data:
cable PVC
cable length 5m

fig.	GEV No.	probe type	probe (°C)	probe
3	378397[1]	PTC 1kOhm	-40 up to +120	ø5.5x100mm

[1]with conical tip

4

technical data:
cable PVC
cable length 5m

fig.	GEV No.	probe type	probe (°C)	probe
4	378398[1,2]	PTC 1kOhm	-40 up to +120	ø5.5x100mm

[1]with conical tip [2]heated

solenoid valves

solenoid valves (refrigeration)

CASTEL

valve bodies

STANDARD series

suitable for refrigerants R22, R134a, R404A, R407C, R410A, R507

technical data:
type NC
pressure max 45bar
temperature range -35 up to +105°C

pos.	GEV No.	type	connection	DN (mm)
1	370151	1028/2 S	1/4" soldering connection	2.2
2	370382	1028/M10S	10mm soldering connection	3
3	370383	1068/M10S	10mm soldering connection	7
4	370384	1068/M12S	12mm soldering connection	7
5	370385	1078/M12S	12mm soldering connection	12.5
6	370386	1078/5S	16mm soldering connection	12.5
7	370387	1079/7S	22mm soldering connection	12.5

technical data:
type NC
pressure max 45bar
temperature range -35 up to +105°C

pos.	GEV No.	type	connection	DN (mm)
1	370153	1070/4 S	1/2" SAE	12.5
2	370150	1020/2 S	1/4" SAE	2.5
3	370154	1090/6 S	3/4" SAE	16.5
4	370788	1020/3S	3/8" SAE	2.5
5	370152	1064/3 S	3/8" SAE	7
6	370381	1090/5 S	5/8" SAE	16.5

GO GREEN series

hydrocarbons (HC liquids) and carbon dioxide (R744)

technical data:
type NC
pressure max 35bar
temperature range -20 up to +105°C

pos.	GEV No.	type	connection
1	370807	1028V/M10S	M18x1.5 (tube ø 12mm)
2	370804	1028V/2S	1/4" soldering connection
3	370805	1028V/2S.E	1/4" soldering connection
4	370806	1028V/3S	3/8" soldering connection
5	370811	1068V/4S	ODS 1/2"
6	370809	1068V/M10S	ODS 10mm
7	370810	1068V/M12S	ODS 12mm
8	370808	1068V/3S	ODS 3/8"

spare parts and accessories

1

2

technical data:
power 8VA
frequency 50/60Hz

fig.	GEV No.	description	supply	connection
1	371303	solenoid coil	24VAC	cable 1000mm
1	371084	solenoid coil	230VAC	cable 1000mm
2	371042	solenoid coil	24VAC	DIN 43650A
2	371301	solenoid coil	110VAC	DIN 43650A
2	371041	solenoid coil	240VAC	DIN 43650A

1

2

3

fig.	GEV No.	description	plug type	connector
1	371305	power socket	DIN 43650A	cable 2000mm
2	371090	power socket	DIN 43650A	screw
3	371304	power socket	DIN 43650A	screw

DANFOSS

valves

technical data:
type NC
temperature range -40° up to 105°C

pos.	GEV No.	type	p max (bar)	connection	DN (mm)
1	370293	EVR 3	45.2	6mm soldering connection	3.2
2	370294	EVR 6	35	10mm soldering connection	6
3	370295	EVR 10	35	12mm soldering connection	9.5
4	370296	EVR 15	32	16mm soldering connection	14

technical data:
type NC
temperature range -40° up to 105°C

pos.	GEV No.	type	p max (bar)	connection	DN (mm)
1	370292	EVR 3	45.2	6mm, 7/16 UNF	3.2
2	370298	EVR 10	35	3/4" UNF (12mm)	14
3	370299	EVR 15	32	7/8" UNF (16mm)	14

valve bodies

technical data:
type NC
temperature range -40° up to 105°C

pos.	GEV No.	type	p max (bar)	connection	DN (mm)
1	370286	EVR 3	45.2	10mm soldering connection	3.2
2	370160	EVR 3	45.2	6mm soldering connection	3.2
3	370287	EVR 6	35	10mm soldering connection	6
4	370288	EVR 6	35	12mm soldering connection	6
5	370289	EVR 10	35	12mm soldering connection	9.5
6	370290	EVR 10	35	16mm soldering connection	9.5
7	370291	EVR 10	35	16mm soldering connection	14

Find the complete and up-to-date range of products in our GEV Webshop

technical data:
type NC
temperature range -40° up to 105°C

pos.	GEV No.	type	p max (bar)	connection	DN (mm)
1	370159	EVR 3	45.2	7/16" UNF (1/4" SAE)	3.2
2	370162	EVR 6	35	3/4" UNF (1/2" SAE)	9.5
3	370161	EVR 6	35	5/8" UNF (3/8" SAE)	6
4	370163	EVR 10	32	7/8" UNF	14

1

technical data:
type NC
pressure max 35bar
temperature range -10 up to +80°C

fig.	GEV No.	type	connection	DN (mm)
1	370664	EV210B	G1/4 (Whitworth pipe thread)	1.5

spare parts and accessories

1 2 3

fig.	GEV No.	description
1	371046	console for solenoid valve for EVR2,3,6,10
2	371004	solenoid coil DANFOSS 220/230V voltage AC 10VA
3	371040	solenoid coil DANFOSS type EVR 230V

accessories

union nuts

1 2 3

fig.	GEV No.	type	size	pipe ø	Int. Code
1	750050	7010/22	1/4" SAE	1/4" - 6mm	NS4-4
1	750460	7010/33	3/8" SAE	3/8"	NS4-6
1	750463	7010/44	1/2" SAE	1/2"	NS4-8
1	750065	7010/55	5/8" SAE	5/8" - 16mm	NS4-10
2	750057	7020/32	3/8" SAE	1/4" - 6mm	NRS4-64
2	750462	7020/43	1/2" SAE	3/8"	NRS4-86
2	750461	7020/54	5/8" SAE	1/2"	NRS4-108
3	750051	7030/3M8	3/8" SAE	8mm	-
3	750052	7030/3M10	3/8" SAE	10mm	-
3	750053	7030/4M10	1/2" SAE	10mm	-
3	750054	7030/4M12	1/2" SAE	12mm	-
3	750063	7030/5M12	5/8" SAE	12mm	-
3	750064	7030/5M14	5/8" SAE	14mm	-
3	750055	7030/6M14	3/4" SAE	14mm	-
3	750056	7030/6M18	3/4" SAE	18mm	-

pressure switches

for refrigeration

RANCO

O16 series

1

technical data:
reset automatic
connection 7/16" UNF (1/4" SAE)

fig.	GEV No.	type	switching diff. (bar)	pressure range (bar)
1	541121	O16-H6703	0.6-4	-0.3-7
1	541123	O16-H6750	2.5-8	7-30

1

technical data:
reset manual
connection 7/16" UNF (1/4" SAE)

fig.	GEV No.	type	switching diff. (bar)	pressure range (bar)
1	541122	O16-H6705	0.6	-0.7-6.4
1	541124	O16-H6751	3.2	7-30

O17 series

1

technical data:
connection 7/16" UNF (1/4" SAE)
operable temperature range low pressure -0.3-7bar
operable temperature range high pressure 7-30bar
switching difference at high pressure 3,5bar
switching difference at low pressure 0.6-4bar

fig.	GEV No.	type	reset HP	reset LP
1	541125	017H4758.101 PED	automatic	automatic
1	541126	O17-H4703	manual	manual
1	541127	O17-H4705	manual	automatic

compressors

ACC / CUBIGEL / ZEL

R134A

1

technical data:
refrigerant R134a
voltage 220-240V
frequency 50Hz

fig.	GEV No.	type	weight (kg)	P (HP)	cylinder capacity (cm^3)	motor system	power at -25°C (W)	power at -20°C (W)	power at -15°C (W)	power at -10°C (W)	power at -5°C (W)	power at 0°C (W)	power at +5°C (W)	power at +10°C (W)
1	605196	GD36MB	6.7	1/10	3.62	CSIR	88	97	107	118	130	144	160	176
1	605006	GD40MB-D	6.7	1/8	4.1	CSIR	64	87	117	153	196	245	301	363
1	605010	GL12TB	11.2	3/8	12	CSIR	143	194	259	339	432	539	661	796
1	605012	GL45TB	8.4	1/6	4.5	CSIR	76	101	134	175	223	278	342	413
1	605197	GL60AA	9.1	1/6	5.99	RSIR	135	178	227	283	-	-	-	-
1	605007	GL60TB	9.5	1/5	5.7	CSIR	95	128	170	222	284	355	437	528
1	605062	GL80AA	9	1/5	7.39	RSIR	144	196	256	326	-	-	-	-
1	605008	GL80TB	9.5	1/5	7.6	CSIR	165	215	290	390	500	615	727	840
1	605185	GL90AA	9.4	1/4	8.1	RSIR	200	261	330	407	-	-	-	-
1	605009	GL90TB	10.8	1/4	8.8	CSIR	143	194	259	339	432	539	661	796
1	605011	GP14TB	11.5	3/8	14	CSIR	191	271	373	497	643	810	999	1209
1	605170	GP16TB	12	3/8	16.15	CSIR	295	395	523	688	878	1093	1323	1598
1	605182	GX18TB	16	1/2	18.39	CSIR	401	553	734	944	1182	1449	1744	2068

Find the complete and up-to-date range of products in our GEV Webshop

R22

1

technical data:
refrigerant R22
voltage 220/240V
frequency 50/60Hz
motor system CSIR

fig.	GEV No.	type	weight (kg)	P (HP)	cylinder capacity (cm³)	power at -25°C (W)	power at -20°C (W)	power at -15°C (W)	power at -10°C (W)	power at -5°C (W)	power at 0°C (W)	power at +5°C (W)	power at +10°C (W)
1	605066	L40TN	9.5	1/6	4.04	113	150	195	248	309	380	458	545

R404a/R507

1

2

3

4

technical data:
refrigerant R404a/R507
voltage 220-240V
frequency 50Hz

fig.	GEV No.	type	weight (kg)	P (HP)	cylinder capacity (cm³)	motor system	power at -25°C (W)	power at -20°C (W)	power at -15°C (W)	power at -10°C (W)	power at -5°C (W)	power at 0°C (W)	power at +5°C (W)	power at +10°C (W)
1	605020	ML40TB	10	1/6	4.04	CSIR	168	218	276	342	416	499	589	688
1	605068	ML45TB	10	1/5	4.5	CSIR	192	246	309	382	465	557	659	771
1	605013	ML60TB	10.1	1/4	5.68	CSIR	244	319	407	511	628	760	906	1067
1	605014	ML80TB	11.4	3/8	7.57	CSIR	261	346	446	561	691	835	993	1167
1	605176	ML90FB	11	1/3	8.85	CSIR	394	495	606	729	-	-	-	-
1	605028	ML90TB	11.6	3/8	8.85	CSIR	323	418	532	666	819	990	1181	1391
1	605138	MP12FB	12	3/8	12	CSIR	510	657	819	999	-	-	-	-
1	605029	MP12RB	13.5	1/2	12	CSR	561	734	933	1157	1407	1681	1982	-
1	605073	MP14FB	13.9	1/2	14	CSIR	584	746	926	1124	-	-	-	-
1	605067	MP14RB	13.5	1/2	14	CSR	612	793	999	1230	1487	1769	2076	2409
1	605093	MX21TB	17.5	1	20.73	CSR	733	813	892	970	1046	1121	1195	1268
2	605195	MS34FB	22.7	1	34.42	CSR	1733	2259	2843	3487	-	-	-	-
3	605127	MX18FB	17.3	5/8	18.4	CSR	750	985	1219	1498	-	-	-	-
4	605072	MX18TB	17.2	7/8	18.4	CSR	640	839	1076	1350	1663	2013	2400	2826
4	605180	MX23FB	17.5	1	23.2	CSR	982	1246	1541	1868	-	-	-	-

EMBRACO / ASPERA

R134A

technical data:
refrigerant R134a
voltage 220-240V
frequency 50Hz

pos.	GEV No.	type	weight (kg)	P (HP)	cylinder capacity (cm³)	motor system	power at -25°C (W)	power at -20°C (W)	power at -15°C (W)	power at -10°C (W)	power at -5°C (W)	power at 0°C (W)	power at +5°C (W)	power at +10°C (W)
1	605016	EM65HHR	7.62	1/6	5.54	CSIR	-	-	-	304	388	484	592	711
2	605017	EMT36HLP	7.52	1/10	3.97	RSIR	94	123	160	203	253	-	-	-
3	605086	EMT45HDR	7.7	1/8	3.97	CSIR	-	-	162	207	256	314	383	467
4	605061	EMT49HLP	7.71	1/6	5.56	RSIR	131	170	217	274	342	-	-	-
5	605181	EMT50HDP	7.8	1/6	4.5	RSIR	-	-	161	207	261	324	396	476
6	605166	EMT6144Z	7.9	1/6	6.05	CSIR	-	-	238	300	374	461	560	-
7	605189	EMT6160Z	7.8	1/4	6.76	CSIR	-	-	325	412	513	630	762	910
8	605135	EMT6170Z	8.1	1/6	7.69	CSIR	-	-	281	358	448	550	663	-
9	605119	NE2121Z	11.7	1/4	9.26	CSIR	217	285	368	465	575	-	-	-
10	605001	NEK6170Z	10.4	1/4	8.4	CSIR	-	-	-	336	443	570	718	885
11	605175	NJ6226Z	19.8	1 1/4	34.37	CSR	-	-	1144	1497	1892	2340	2852	3438
12	605079	NT6215Z	17	1/2	17.4	CSIR	-	-	484	646	843	1071	1326	1606
13	605115	T6217Z	16.8	1/2	22.4	CSIR	-	-	718	973	1275	1624	2020	2464

R290A

1

2

technical data:
refrigerant R290
voltage 220-240V
frequency 50Hz

fig.	GEV No.	type	weight (kg)	P (HP)	cylinder capacity (cm³)	motor system	power at -25°C (W)	power at -20°C (W)	power at -15°C (W)	power at -10°C (W)	power at -5°C (W)	power at 0°C (W)	power at +5°C (W)	power at +10°C (W)
1	605200	EMT6144U	7.8	1/4	4.5	CSIR	-	228	280	342	416	502	598	705
1	605201	EMT6152U	7.8	1/4	5.2	CSIR	-	278	346	418	500	595	710	844
1	605198	EMT6165U	7.8	1/3	5.96	CSIR	-	330	402	485	580	690	822	978
1	605204	NEK2160U	11.9	3/4	16.8	CSR	646	808	995	1206	-	-	-	-
2	605202	NT2170U	17	1	20.44	CSR	698	883	1097	1340	-	-	-	-
2	605199	NT2180U	18.2	1	22.4	CSR	835	1047	1290	1563	-	-	-	-
2	605203	NT2210U	17.8	1 1/4	27.8	CSR	1024	1301	1627	2003	-	-	-	-

Find the complete and up-to-date range of products in our GEV Webshop

R404a/R507

1

2

3

technical data:
refrigerant R404a/R507
frequency 50Hz

fig.	GEV No.	type	volt. (V)	weight (kg)	P (HP)	cylinder capacity (cm³)	motor system	power at -25°C (W)	power at -20°C (W)	power at -15°C (W)	power at -10°C (W)	power at -5°C (W)	power at 0°C (W)	power at +5°C (W)	power at +10°C (W)
1	605130	EMT6144GK	220-240	8.1	1/4	3.97	CSIR	-	246	307	377	459	552	656	774
1	605004	EMT6152GK	220-240	7.8	1/4	4.5	CSIR	-	267	332	351	437	535	646	769
1	605018	NE2125GK	220-240	10.45	1/3	8.78	CSIR	278	354	439	534	-	-	-	-
1	605186	NEK2150GK	220-240	11.6	1/2	12.12	CSIR	522	657	814	995	-	-	-	-
1	605125	NEK6213GK	220-240	11.6	1/2	12.12	CSIR	-	695	884	1093	1333	1600	1894	2215
1	605178	NEK6217GK	220-240	11.6	3/4	14.3	CSR	-	777	954	955	1171	1386	1651	1916
1	605174	NJ2192GK	220-240	20.4	1 1/4	26.2	CSR	1342	1745	2196	2196	-	-	-	-
1	605081	NJ2212GK	220-240	21.5	1 1/2	34	CSR	1738	2289	2921	2921	-	-	-	-
1	605030	NJ9226GK	220-240	20.8	1	21.7	CSR	-	1363	1764	2249	2819	3472	4210	5032
1	605190	NJ9232GK	220-240	22.1	1 1/4	26.2	CSR	-	1093	1470	1911	2413	2973	3588	4255
1	605177	NJ9238GK	220-240	22.1	1 1/2	32.7	CSR	-	2016	2640	3315	4045	4830	5668	6560
1	605078	NT2180GK	220-240	17.3	1	22.4	CSR	873	1147	1460	1813	-	-	-	-
1	605165	NT6226GK	220-240	18.1	1	22.4	CSR	-	1314	1650	2058	2532	3068	3658	4298
2	605139	EMT6165GK	220-240	7.92	1/4	5.19	CSIR	-	-	315	384	477	570	689	808
2	605152	NEK2134GK	220-240	11	1/2	8.77	CSIR	394	501	621	753	-	-	-	-
2	605144	NEK2168GK	220-240	22.9	3/4	14.28	CSR	587	742	921	1123	-	-	-	-
2	605149	NEK6144GK	220-240	10	1/4	4.51	CSIR	-	271	326	395	480	580	694	825
2	605162	NEK6181GK	220-240	10.4	1/4	7.28	CSIR	-	454	533	677	826	1000	1198	1422
2	605161	NEK6210GK	220-240	8.5	3/8	8.78	CSIR	-	566	674	815	988	1195	1435	1707
3	605164	NT2178GK	220-240	17	1	17.4	CSR	808	1032	1285	1565	-	-	-	-
3	605132	NT6222GK	200-240	17	1	17.39	CSR	-	810	1032	1040	1174	1307	1583	2247

R600A

technical data:
refrigerant R600a
voltage 220-240V
frequency 50Hz

pos.	GEV No.	type	weight (kg)	P (HP)	cylinder capacity (cm³)	motor system	power at -25°C (W)	power at -20°C (W)	power at -15°C (W)	power at -10°C (W)	power at -5°C (W)	power at 0°C (W)	power at +5°C (W)	power at +10°C (W)
1	605083	EMT30CDP	7.2	1/8	4.5	RSIR	-	-	112	142	180	222	268	320
2	605085	EMT45CDP	7.7	1/8	6.78	RSIR	-	-	164	209	262	322	392	477

L´UNITE HERMETIQUE / TECUMSEH

R134A

1

2

3

4

technical data:
refrigerant R134a
voltage 220-240V
frequency 50Hz

fig.	GEV No.	type	weight (kg)	P (HP)	cylinder capacity (cm³)	motor system	power at -25°C (W)	power at -20°C (W)	power at -15°C (W)	power at -10°C (W)	power at -5°C (W)	power at 0°C (W)	power at +5°C (W)	power at +10°C (W)
1	605173	AE4430Y-FZ	9.7	1/4	8	CSIR	-	-	294	382	488	613	760	930
1	605188	AE4440Y-FZ	10	1/3	10.33	CSIR	-	-	399	508	637	790	968	1176
1	605167	AE4456Y-FZ	11.5	1/2	14.51	CSIR	-	-	579	737	921	1133	1380	1664
1	605095	CAE4448Y	12	3/8	14.2	CSIR	-	-	524	659	828	1028	1365	1511
2	605098	AE4460Y-FZ	12.2	1/2	15.09	CSR	-	-	660	838	1040	1280	1540	1840
2	605171	CAJ4511Y-F	23.5	1	32.7	CSR	-	-	1109	1474	1895	2382	3218	3592
3	605160	CAJ4461Y	20	1/2	18.3	CSIR	-	-	475	642	856	1115	1421	-
3	605172	CAJ4492Y-F	22	3/4	25.95	CSIR	-	-	584	871	1215	1617	2078	-
4	605184	THB4419YFZ	7	1/6	5.2	CSIR	-	-	195	245	300	362	408	499

R404A

1

2

3

technical data:
refrigerant R404A

fig.	GEV No.	type	volt. (V)	freq. (Hz)	weight (kg)	P (HP)	cylinder capacity (cm³)	motor system	power at -25°C (W)	power at -20°C (W)	power at -15°C (W)	power at -10°C (W)	power at -5°C (W)	power at 0°C (W)	power at +5°C (W)	power at +10°C (W)
1	605183	AE2420Z	220-240	50	11.5	3/8	9.35	CSIR	522	661	824	1012	-	-	-	-
1	605151	AE4440Z-FZ	220-240	50	10.5	1/3	6.69	CSIR	-	-	433	546	676	826	1000	1199
1	605023	AE4450Z	220-240	50	12.5	3/8	9.4	CSIR	355	-	434	567	-	927	1270	1367
1	605158	AE4470Z	220-240	50	13.7	1/2	12	CSR	-	670	843	1035	1251	1495	1773	2088
1	605021	AEZ4425Z	220-240	50	9.8	1/5	4.5	CSIR	-	-	198	263	341	432	537	629
1	605025	AEZ4430Z	220-240	50	10.2	1/4	5.7	CSIR	-	-	258	346	441	550	682	794
1	605157	CAJ2428Z	220-240	50	21	5/8	15.2	CSR	638	762	-	1261	-	-	-	-
1	605136	CAJ2464Z	220-240	50	21.5	1.5	34.5	CSR	1579	1850	2317	2855	-	-	-	-
1	605027	CAJ4517Z	220-240	50	24	1.2	25.95	CSR	-	-	1588	1987	2451	2971	3536	4132
1	605187	TAJ2464Z	400	50/60	22.5	1.5	34.4	TRI	1579	1850	2317	2855	-	-	-	-
2	605015	CAE9470Z	220-240	50	13.7	1/2	13.3	CSR	-	549	711	897	1110	1356	1637	1960
3	605134	CAJ2446Z	220-240	50	23	1.2	26.1	CSR	1110	1423	1821	2290	-	-	-	-
3	605065	CAJ4519Z	220-240	50	24	1.5	34.4	CSR	-	-	1769	2353	3009	3756	-	-
3	605026	CAJ9480Z	220-240	50	22	5/8	15.2	CSR	393	571	774	1009	1284	1607	1989	2334
3	605032	CAJ9510Z	220-240	50	23	1	18.3	CSR	527	732	970	1252	1583	1972	2437	2826
3	605070	CAJ9513Z	220-240	50	23	1.1	24.2	CSR	-	930	1269	1654	2086	2568	3096	3671

Find the complete and up-to-date range of products in our GEV Webshop

SECOP DANFOSS

R134A

technical data:
refrigerant R134a
voltage 220-240V

pos.	GEV No.	type	freq. (Hz)	weight (kg)	P (HP)	cylinder capacity (cm³)	motor system	power at -25°C (W)	power at -20°C (W)	power at -15°C (W)	power at -10°C (W)	power at -5°C (W)	power at 0°C (W)	power at +5°C (W)	power at +10°C (W)
1	605205	FR11G	50	10.6	1/4	11.15	RSIR/CSIR	170	233	307	395	501	628	780	-
2	605088	FR7.5G	50/60	10.6	1/5	6.93	RSIR/CSIR	99	142	193	254	325	408	505	618
3	605091	FR8.5G/FF8.5HBK	50	10.6	1/4	7.95	RSIR/CSIR	123	171	228	298	381	478	592	722
4	605060	NL10MF	50/60	10.5	1/3	10.1	RSIR/CSIR	-	293	382	487	611	758	930	1129
5	605193	NL11MF	50	10.5	1/3	11.15	RSIR/CSIR	-	321	418	534	670	832	1020	1239
6	605059	NL6.1MF	50/60	10.5	1/6	6.13	RSIR/CSIR	-	156	209	271	345	432	533	650
7	605063	NL7.3MF	50/60	10.5	1/5	7.27	RSIR/CSIR	-	198	261	336	425	530	652	794
8	605089	NL8.4MF	50/60	10.5	1/4	8.35	RSIR/CSIR	-	235	305	390	491	610	749	912
9	605087	SC12G	50	12.6	1/3	12.9	RSIR/CSIR	216	312	430	574	746	951	1191	1469
10	605077	SC15G HST	50	13.1	3/8	15.3	CSIR	203	358	523	703	901	1124	1377	1665
11	605076	SC18G	50	13.7	1/2	17.7	CSIR	348	485	649	844	1074	1343	1655	2014
12	605194	SC21G	50	13.5	5/8	20.95	CSR	410	558	746	977	1250	1568	1931	2343
13	605123	TL4G	50/60	7.5	1/8	3.86	CSIR	72	99	133	173	222	280	347	425
14	605052	TL5G	50	7.5	1/6	5.08	RSIR/CSIR	97.5	132	172	220	277	345	423	461

R404a/R507

technical data:
refrigerant R404a/R507
voltage 220-240V

pos.	GEV No.	type	freq. (Hz)	weight (kg)	P (HP)	cylinder capacity (cm³)	motor system	power at -25°C (W)	power at -20°C (W)	power at -15°C (W)	power at -10°C (W)	power at -5°C (W)	power at 0°C (W)	power at +5°C (W)	power at +10°C (W)
1	605080	FR8,5CL HST	50	10.6	1 1/2	7.95	CSIR	338	434	546	674	-	-	-	-
2	605179	SC10CLX	50/60	13.1	1/3	10.29	CSIR	424	569	737	932	1154	-	-	-
3	605057	SC12CL	50	12.5	3/8	12.87	CSIR	568	754	971	1220	1505	-	-	-
4	605058	SC15CL	50	13.8	1/2	15.28	CSIR	637	813	1017	1251	1699	-	-	-
5	605146	SC15MLX	50	14	3/4	15.28	CSIR	-	758	951	1183	1458	1780	2155	-
6	605056	SC18CL	50	13.7	5/8	17.69	CSR	691	881	1095	1332	1593	-	-	-
7	605113	SC18MLX.3	50	14	1	17.68	CSR	-	947	1178	1454	1780	2162	2606	-
8	605082	SC21CL	50	14	7/8	20.95	CSR	947	1215	1524	1876	-	-	-	-

accessories

heating elements

1

fig.	GEV No.	P (W)	volt. (V)	CL (mm)	ID ø (mm)
1	696599	35	230	1000	110-180
1	696600	45	230	1000	150-290
1	696601	65	230	1000	210-330

condensing trays

condensing trays heated

universal

1

technical data:
length 320mm
width 120mm
height 75mm

fig.	GEV No.	volt. (V)	P (W)
1	750001	230	160

fig.	GEV No.	volt. (V)	P (W)
1	750002	230	300

condensing trays

1

2

fig.	GEV No.	L (mm)	W (mm)	H (mm)	capacity (l)
1	750430	295	35	200	1.6
2	750431	300	140	100	2.8

heating cartridges

1

fig.	GEV No.	P (W)	volt. (V)	ø (mm)	L (mm)	TS	CL (mm)
1	417227	90	230	12	124	3/8"	4000
1	417570	110	230	12	120	3/8"	1000
1	417577	190	230	12	180	3/8"	300
1	417571	230	230	12	180	3/8"	1000
1	418892	300	230	12	240	3/8"	2000
1	417572	330	230	12	240	3/8"	1000

fans

axial fans

ebm-papst

pos.	GEV No.	L (mm)	W (mm)	H (mm)	voltage	P (W)	manuf. no.
1	601496[1]	60	60	25	12VDC	0.8	612NME
2	601826[1]	80	80	38	230VAC	12	8556 V
3	601038[1]	80	80	38	230VAC	12	8556N
4	601908[2]	80	80	38	230VAC	12	8550N
5	601120[1]	92	92	25	12VDC	0.8	3412
6	601074[1]	92	92	25	24VDC	2.3	3414N
7	601632[2]	92	92	25	24VDC	2.4	3414G
8	601082[1]	92	92	25	230VAC	9/11	3956
9	601633[1]	92	92	38	230VAC	12	3656
10	601634[1]	119	119	25	230VAC	14	9956
11	601121[1]	119	119	38	12VDC	4.5	4182NX
12	601656[1]	119	119	38	24VDC	12.5	4114NHH
13	601754[1]	119	119	38	230VAC	13	4856Z
14	601727[2]	119	119	38	230VAC	13	4580Z
15	601482[1]	119	119	38	230VAC	13	4580ZW
16	601030[1]	119	119	38	230VAC	18	4656Z
17	601715[1]	119	119	38	230VAC	18	4656ZW
18	601458[1]	119	119	38	230VAC	19	4656N
19	601089[2]	119	119	38	230VAC	19	4650N
20	601752[1]	127	127	38	12VDC	21	DV5212N
21	601635[1]	127	127	38	230VAC	18	5958
22	601481[2]	127	127	38	230VAC	18	5950W
23	601793[1]	135	135	38	230VAC	30	5656 S

[1]with ball bearings [2]with slide bearings

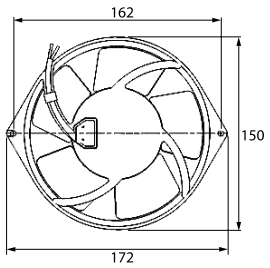

pos.	GEV No.	L (mm)	W (mm)	H (mm)	voltage	P (W)	manuf. no.
1	601631[1]	172	150	55	230VAC	47	7450ES
2	601088[1]	172	150	55	230VAC	39/45	7855ES
3	601806[1]	172	150	55	230VAC	45/39	W2S130-AB03-15

[1]with ball bearings

Find the complete and up-to-date range of products in our GEV Webshop

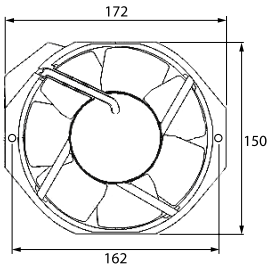

pos.	GEV No.	L (mm)	W (mm)	H (mm)	voltage	P (W)	manuf. no.
1	601723	172	150	38	230VAC	13/14	W2E142-CC15-16
2	601113[1]	172	150	38	230VAC	27/28	7056ES

[1]with ball bearings

pos.	GEV No.	ø (mm)	H (mm)	voltage	P (W)	manuf. no.
1	601755[1]	172	51	230VAC	24	6058ES

[1]with ball bearings

1

technical data:
voltage 230V

fig.	GEV No.	D (mm)	blades	P (W)	speed (rpm)	manuf. no.
1	601821	110	5	19	2650	4656TZR

import

pos.	GEV No.	L (mm)	W (mm)	H (mm)	voltage	P (W)	connection
1	601154[1]	60	60	25	12VDC	2.28	cable 300mm
2	601155[1]	60	60	25	24VDC	2.88	cable 320mm
3	601670[1]	80	80	25	12VDC	1.8	cable 300mm
4	601439[1]	80	80	25	24VDC	1.9	cable 300mm

[1]with ball bearings

pos.	GEV No.	L (mm)	W (mm)	H (mm)	voltage	P (W)	connection
5	601130[1]	80	80	25	230VAC	13/14	F2.8
6	601081[1]	80	80	38	230VAC	14/13.5	F2.8
7	601747[1]	92	92	25	12VDC	2.3	cable 300mm
8	601680[1]	92	92	25	24VDC	2.4	cable 300mm
9	601055[1]	92	92	25	230VAC	14.5/14	F2.8
10	601158[1]	119	119	25	12VDC	5.4	cable 300mm
11	601159[1]	119	119	25	24VDC	5	cable 350mm
12	601131[1]	119	119	25	230VAC	19/18	F2.8
13	601080[1]	119	119	38	230VAC	23/20	F2.8
14	601604[2]	119	119	38	230VAC	17/15	cable 300mm
15	601712[1]	120	120	38	12VDC	10	cable 320mm
16	601705[1]	120	120	38	24VDC	9.2	cable 300mm
17	601457[1]	127	127	38	12VDC	12.72	cable 300mm

[2]with slide bearings

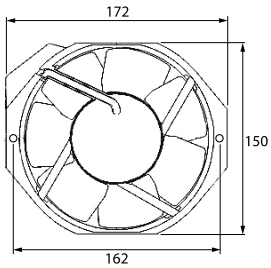

pos.	GEV No.	L (mm)	W (mm)	H (mm)	voltage	P (W)	connection
1	601706[1]	172	150	51	230VAC	39	F3.2

[1]with ball bearings

accessories

fan guards

pos.	GEV No.	ø (mm)	MD (mm)	for axial fan (mm)
1	691102	75	71	80
2	691103	90	83	92
3	691104	115	105	119

connecting cables

1

fig.	GEV No.	CL (mm)	connection
1	550898	2000	F 2.8

refrigeration fans

refrigeration motors universal

ebm-papst

IQ series

technical data:
voltage 230V
cable length 1500mm
speed 1300rpm
version 5 mounting options
bearing ball bearing

pos.	GEV No.	P (W)	type	pos.	GEV No.	P (W)	type
1	601893	10	IQ3612	2	601894	20	IQ3620

multi fit fan motors

technical data:
voltage 230V
cable length 1500mm
speed 1300/1550rpm
version 5 mounting options
bearing slide bearing

pos.	GEV No.	P (W)	type
1	601756	5	M4Q045-BD01-75
2	601757	10	M4Q045-CA03-75
3	601758	16	M4Q045-CF01-75
4	601759	18	M4Q045-DA01-75
5	601760	25	M4Q045-EA01-75
6	601761	34	M4Q045-EF01-75

ELCO

N series - multi fit

1

technical data:
voltage 230V
connection cable 500mm
speed 1300/1550rpm
version 5 mounting options
bearing slide bearing

fig.	GEV No.	P (W)	type
1	601430	5	VNT5-13/027
1	601427	10	VNT10-20/028
1	601528	16	VNT16-25/029
1	601529	25	VNT25-40/030
1	601530	34	VNT34-45/031

N series - plug In

1

technical data:
voltage 230V
connection Plug In
speed 1300/1550rpm
version 3 mounting options
bearing slide bearing

fig.	GEV No.	P (W)	type
1	601890[1]	10	VN10-20/079
1	601891[1]	16	VNT16-25/110

[1]with coded connector

1

fig.	GEV No.	description
1	601892	connector cable for Plug-In cable length 1500mm ELCO

N series - standard

1

technical data:
voltage 230V
connection
speed 1300/1550rpm
version 3 mounting options
bearing ball bearing

fig.	GEV No.	P (W)	type
1	601762	10	VN10-20/1456
1	601763	16	VN16-25/1457
1	601764	25	VN25-40/1458

IQ series

technical data:
voltage 230V
cable length 1000mm
speed 1400rpm
version 3 mounting options
bearing ball bearing

pos.	GEV No.	P (W)	type	pos.	GEV No.	P (W)	type
1	601886	14	IQ motor	2	601887	25	IQ motor

Find the complete and up-to-date range of products in our GEV Webshop

RE series

technical data:
voltage 230/240V
cable length 1000mm
speed 2600rpm
version 3 mounting options
bearing slide bearing

pos.	GEV No.	P (W)	type
1	601608	18	R18-25/010

BT series - capacitor motors

1

technical data:
voltage 230V
cable length 500mm
speed 1300rpm
version 3 mounting options
bearing slide bearing

fig.	GEV No.	P (W)	type
1	601420[1]	45	3FBT 50-40/15

[1]incl. capacitor

IMPORT

multi fit fan motors

technical data:
voltage 230V
cable length 500mm
speed 1300rpm
version 5 mounting options
bearing slide bearing

pos.	GEV No.	P (W)	pos.	GEV No.	P (W)	pos.	GEV No.	P (W)
1	601020	5	3	601023	16	5	601050	34
2	601022	10	4	601024	25			

IQ series

technical data:
voltage 220-240V
cable length 400mm
speed 1300rpm
type IQ motor
version 3 mounting options
bearing ball bearing

pos.	GEV No.	P (W)	pos.	GEV No.	P (W)	pos.	GEV No.	P (W)
1	601877	7	2	601878	24	3	601879	32

capacitor motors

1

technical data:
voltage 220-240V
cable length 500mm
speed 1300rpm
type YZF
version 3 mounting options
bearing slide bearing

fig.	GEV No.	P (W)	freq. (Hz)	fig.	GEV No.	P (W)	freq. (Hz)
1	601984	10	50	1	601986	30	50
1	601985	20	50				

accessories

fan wheels

technical data:
version sucking
material aluminium

pos.	GEV No.	ø (mm)	BA (°)	pos.	GEV No.	ø (mm)	BA (°)
1	601566	154	28	5	601567	250	28
2	601553	172	28	6	601284	254	28
3	601070	200	28	7	601410	300	28
4	601283	230	28				

technical data:
version blowing
material aluminium

pos.	GEV No.	ø (mm)	BA (°)	pos.	GEV No.	ø (mm)	BA (°)
1	601568	154	28	5	601572	250	28
2	601569	172	28	6	601573	254	28
3	601570	200	28	7	601574	300	28
4	601571	230	28				

mounting rings

technical data:
version sucking
height 49mm

pos.	GEV No.	for fan wheel ø (mm)	ø (mm)	MD1 (mm)
1	601585	154	200	190
2	601586	172	220	208
3	601587	200	246	236
4	601588	230	278	266
5	601589	254	303	290
6	601590	300	378	365

feet

pos.	GEV No.	H (mm)	MD (mm)
1	601597	39	78
2	601575	55	81
3	601576	72	81
4	601577	84	81
5	601578	109	78

fan guards

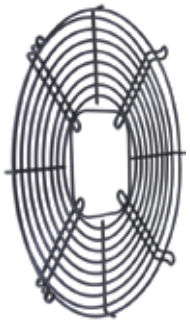

pos.	GEV No.	for fan wheel ø (mm)	H (mm)	MD1 (mm)
1	601579	154	11	190
2	601580	172	11	208
3	601581	200	25	236
4	601582	230	27	266
5	601583	254	17	290
6	601584	300	17	344

cold air circulating fans (complete)

ebm-papst

A2E series

1

technical data:
voltage 230V
version blowing

fig.	GEV No.	type	D (mm)	blades	P (W)	speed (rpm)
1	601535	A2E200-AH38-01	200	9	78	2600
1	601750	A2E250-AL06-09	250	7	120/160	2500

1

technical data:
voltage 230V
version sucking

fig.	GEV No.	type	D (mm)	blades	P (W)	speed (rpm)
1	601663[1]	A2E200-AI38-10	200	9	64	2600
1	601959	A2E250-AE65-02	256	5	115	2550
1	601960	A2E250-AM06-13	250	9	120	2500
1	601707	A2E300-AC47-02	300	5	140/190	2900

[1]incl. capacitor and guard

A3G series

1

technical data:
voltage 230V
version blowing

fig.	GEV No.	type	D (mm)	blades	P (W)	speed (rpm)
1	602050	A3G300-AH13-10	300	5	77	1640

Find the complete and up-to-date range of products in our GEV Webshop

A4D series

1

technical data:
voltage 400V
version sucking

fig.	GEV No.	type	D (mm)	blades	P (W)	speed (rpm)
1	601628	A4D500-AM03-01	500	5	720	1390

S6E series

1

technical data:
voltage 230V
version blowing

fig.	GEV No.	type	D (mm)	blades	P (W)	speed (rpm)
1	601624	S6E330-AP02-34	330	5	65	940

A4E series

blowing

1

technical data:
number of blades 5
voltage 230V
version blowing

fig.	GEV No.	type	D (mm)	P (W)	speed (rpm)
1	601618	A4E250-AA04-01	250	32	1420
1	601620	A4E300-AB01-38	300	58	1300
1	601619	A4E300-AP26-01	300	68	1400
1	601621	A4E315-AA05-01	315	120	1400
1	601622	A4E315-AC08-18	315	95	1370
1	601623	A4E315-AC08-19	315	95	1370
1	601625	A4E330-AP18-01	330	110	1400
1	601422	A4E350-AA06-01	350	140	1390
1	601684	A4E350-AA06-54	350	145	1380/1540
1	601626	A4E350-AN19-01	350	158/200	1270
1	601627	A4E400-AP02-01	392	160	940

R2E series

1

technical data:
voltage 230V

fig.	GEV No.	type	D (mm)	blades	P (W)	speed (rpm)
1	601617	R2E190-A026-66	190	6	58	2500
1	601536	R2E190-A026-73	190	6	58/75	2700

accessories

fan guards

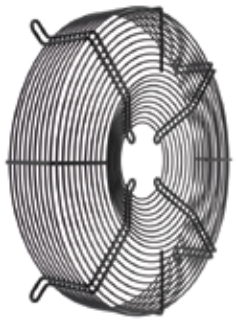

1

fig.	GEV No.	for fan wheel ø (mm)	ø (mm)	HD (mm)	H (mm)
1	601954	250	280	300	45
1	601949	300	330	368	65
1	601955	315	330	371	65
1	601950	350	385	422	85
1	601951	400	430	470	85
1	601956	400	440	490	85
1	601957	450	480	522	85
1	601953	500	530	565	112

ZIEHL-ABEGG

1

technical data:
version blowing

fig.	GEV No.	D (mm)	volt. (V)	P (W)	speed (rpm)
1	601972	400	230	240/330	1340/1480
1	601975	500	400	770/490	1300/1025

2

technical data:
version blowing

fig.	GEV No.	D (mm)	volt. (V)	P (W)	speed (rpm)
2	601973	450	230	390/550	1320/1450
2	601974	450	400	450/340	1360/1040
2	601976	500	400	650/440	1340/960
2	601977	630	400	620/440	900/720

HIDRIA

1

technical data:
voltage 230V
frequency 50/60Hz

fig.	GEV No.	type	D (mm)	P (W)
1	602043	R09E-2026P-2M-1611	200	45

2

technical data:
voltage 230V
frequency 50/60Hz

fig.	GEV No.	type	D (mm)	P (W)
2	602011	R09R-2525A-2M-3539	250	95/130
2	601811	R09R-3030HP-4M-2543	300	65/90
2	602009	R09R-3530HA-4M-4237	350	130/165

3

technical data:
voltage 230V
frequency 50/60Hz

fig.	GEV No.	type	D (mm)	P (W)
3	601980	R09R-2528P-4M-1546	250	48/55

IMPORT

technical data:
voltage 230V
version blowing

pos.	GEV No.	D (mm)	P (W)	speed (rpm)
1	601880	300	90/105	1380/1600
2	601881	315	95/135	1380/1500
3	601882	330	100/130	1350/1500
4	601883	350	130/160	1450/1650
5	601884	400	180/250	1380/1550
6	601885	450	150	920

COPREL

AX series

1

2

fig.	GEV No.	volt. (V)	P (W)	freq. (Hz)	D (mm)	connection
1	601078	230	18	50	130	left
2	601079	230	18	50	130	right

Find the complete and up-to-date range of products in our GEV Webshop

MAP series

technical data:
voltage 230V
power 9W
frequency 50/60Hz
fan wheel diameter 96mm

pos.	GEV No.	version	pos.	GEV No.	version
1	601056	blowing	2	601039	sucking

miscellaneous

1

fig.	GEV No.	volt. (V)	freq. (Hz)	P (W)	D (mm)	suitable for	Ref. No.
1	601858	230	50/60	52	190	Friulinox Polaris	FR996074 FR996074

cross flow fans

ebm-papst

1

technical data:
supply 230V/50Hz
application refrigeration
bearing rubber
connection male faston 6.3mm
temperature range 0 up to +60°C

fig.	GEV No.	type	roller ø (mm)	RL (mm)	LCT (mm)	P (W)	airflow (m^3/h)
1	601000	QLK45/0006-2513	45	60	13	15	36
1	601895	QLK45/0012-2513	45	120	13	17	80
1	601907	QLK45/0018-2518	45	180	18	26	125
1	601898	QLK45/0024-2524	45	240	24	32	190
1	601900	QLK45/0030-2524	45	300	24	32	200

2

technical data:
supply 230V/50Hz
application refrigeration
bearing rubber
connection male faston 6.3mm
temperature range 0 up to +60°C

fig.	GEV No.	type	roller ø (mm)	RL (mm)	LCT (mm)	P (W)	airflow (m^3/h)
2	601896	QLK45/0600-2513	45	60	13	15	36
2	601034	QLK45/1200-2513	45	120	13	17	80
2	601052	QLK45/1800-2518	45	180	18	26	125
2	601899	QLK45/2400-2524	45	240	24	32	190
2	601901	QLK45/3000-2524	45	300	24	32	200

3

technical data:
supply 230V/50Hz
application refrigeration
bearing rubber
connection male faston 6.3mm
temperature range 0 up to +60°C

fig.	GEV No.	type	roller ø (mm)	RL (mm)	LCT (mm)	P (W)	airflow (m^3/h)
3	601988	QLZ06/0006-2513	60	60	13	15	40
3	601989	QLZ06/0012-2513	60	120	13	20	70
3	601650	QLZ06/0018-2518	60	180	18	30	130
3	601902	QLZ06/0018-2524	60	180	24	33	150
3	601651	QLZ06/0024-3030	60	240	30	38	170
3	601904	QLZ06/0030-3038	60	300	38	45	230

4

technical data:
supply 230V/50Hz
application refrigeration
bearing rubber
connection male faston 6.3mm
temperature range 0 up to +60°C

fig.	GEV No.	type	roller ø (mm)	RL (mm)	LCT (mm)	P (W)	airflow (m^3/h)
4	601047	QLZ06/0600-2513	60	60	13	17	40
4	601990	QLZ06/1200-2513	60	120	13	20	70
4	601437	QLZ06/1800-2518	60	180	18	31	130
4	601991	QLZ06/1800-2524	60	180	24	33	150
4	601903	QLZ06/2400-3030	60	240	30	33	170
4	601905	QLZ06/3000-3038	60	300	38	45	230

COPREL

with standard coil

1

technical data:
roller diameter 60mm
supply 230V/50Hz
application refrigeration
bearing rubber

fig.	GEV No.	RL (mm)	LCT (mm)	MP	P (W)	connection	temp. (°C)
1	601033	90	15	right	18	F6.3	-10 up to +60
1	601028	120	15	right	19	F6.3	-10 up to +60
1	601025	180	15	right	19	F6.3	-10 up to +60
1	601105	180	30	right	37	F6.3	-10 up to +60
1	601106	240	30	right	40	F6.3	-10 up to +60
1	601107	270	30	right	40	F6.3	-10 up to +60
1	601108	360	35	right	50	F6.3	-10 up to +60

2

technical data:
roller diameter 60mm
supply 230V/50Hz
application refrigeration
bearing rubber

fig.	GEV No.	RL (mm)	LCT (mm)	MP	P (W)	connection	temp. (°C)
2	601032	180	15	left	19	F6.3	-10 up to +60
2	601671	240	30	left	37	F6.3	-10 up to +60
2	601101	300	30	left	43	F6.3	-10 up to +60

3

technical data:
roller diameter 60mm
supply 230V/50Hz
application refrigeration
bearing rubber

fig.	GEV No.	RL (mm)	LCT (mm)	MP	P (W)	connection	temp. (°C)
3	602044	180	20	right	27	F6.3	-30 bis +60

with moulded coils

1

technical data:
roller diameter 60mm
supply 230V/50Hz
application refrigeration
bearing rubber
temperature range -10 up to +60°C

fig.	GEV No.	RL (mm)	LCT (mm)	MP	P (W)	connection
1	601640	90	15	left	18	cable 2000mm
1	601641	120	15	left	19	cable 2000mm
1	601176	180	20	left	25	cable 1200mm
1	601642	240	20	left	25	cable 2000mm
1	601643	270	30	left	33	cable 2000mm
1	601644	300	30	left	43	cable 2000mm

2

technical data:
roller diameter 60mm
supply 230V/50Hz
application refrigeration
bearing rubber
temperature range -10 up to +60°C

fig.	GEV No.	RL (mm)	LCT (mm)	MP	P (W)	connection
2	601547	90	15	right	18	cable 1000mm
2	601637	120	15	right	19	cable 2000mm
2	601636	180	20	right	25	cable 2000mm
2	601638	240	20	right	25	cable 2000mm
2	601639	270	30	right	33	cable 2000mm
2	601434	300	30	right	43	cable 1800mm

3

technical data:
roller diameter 60mm
supply 230V/50Hz
application refrigeration
bearing rubber
temperature range -10 up to +60°C

fig.	GEV No.	RL (mm)	LCT (mm)	MP	P (W)	connection
3	601398	180	20	left	25	cable 2400mm
3	601399	270	35	left	49	cable 2700mm

4

technical data:
roller diameter 60mm
supply 230V/50Hz
application refrigeration
bearing rubber
temperature range -10 up to +60°C

fig.	GEV No.	RL (mm)	LCT (mm)	MP	P (W)	connection
4	601057	270	20	left	26	cable 1500mm
4	601058	300	20	left	34	cable 1500mm

double fans

1

technical data:
roller diameter 60mm
motor position centre
supply 230V/50Hz
application refrigeration
bearing rubber
temperature range -10 up to +60°C

fig.	GEV No.	RL (mm)	LCT (mm)	P (W)	connection
1	601026	2x180	35	42	F6.3

Find the complete and up-to-date range of products in our GEV Webshop

2

technical data:
roller diameter 60mm
motor position centre
supply 230V/50Hz
application refrigeration
bearing rubber
temperature range -10 up to +60°C

fig.	GEV No.	RL (mm)	LCT (mm)	P (W)	connection
2	601645	2x180	43	43	F6.3

kitchen accessories

gastronorm

GN containers

stainless steel 18/10 - standard

pos.	GEV No.	size	D (mm)
1	993102	GN 2/1	20
2	993103	GN 2/1	40
3	993104	GN 2/1	65
4	993105	GN 2/1	100
5	993030	GN 1/1	20
6	993020	GN 1/1	40
7	993019	GN 1/1	55
8	993033	GN 1/1	65
9	993018	GN 1/1	100
10	993035	GN 1/1	150
11	993036	GN 1/1	200
12	993037	GN 2/3	20
13	993038	GN 2/3	40
14	993039	GN 2/3	65
15	993040	GN 2/3	100
16	993041	GN 2/3	150
17	993106	GN 2/3	200
18	993042	GN 1/2	20
19	993043	GN 1/2	40
20	993044	GN 1/2	65
21	993045	GN 1/2	100
22	993046	GN 1/2	150

pos.	GEV No.	size	D (mm)
23	993047	GN 1/2	200
24	993111	GN 1/3	20
25	993112	GN 1/3	40
26	993048	GN 1/3	65
27	993049	GN 1/3	100
28	993050	GN 1/3	150
29	993051	GN 1/3	200
30	993107	GN 2/4	40
31	993108	GN 2/4	65
32	993109	GN 2/4	100
33	993110	GN 2/4	150
34	993113	GN 1/4	20
35	993052	GN 1/4	65
36	993053	GN 1/4	100
37	993054	GN 1/4	150
38	993055	GN 1/4	200
39	993056	GN 1/6	65
40	993057	GN 1/6	100
41	993058	GN 1/6	150
42	993059	GN 1/6	200
43	993060	GN 1/9	65
44	993061	GN 1/9	100

polycarbonate

pos.	GEV No.	size	D (mm)
1	993021	GN 1/1	65
2	993022	GN 1/1	100
3	993023	GN 1/1	150
4	993024	GN 1/1	200
5	993025	GN 1/2	65
6	993026	GN 1/2	100
7	993027	GN 1/2	150
8	993028	GN 1/2	200
9	993029	GN 1/3	65
10	993031	GN 1/3	100
11	993015	GN 1/3	150

pos.	GEV No.	size	D (mm)
12	993032	GN 1/3	200
13	993100	GN 2/4	65
14	993101	GN 2/4	100
15	993034	GN 1/4	65
16	993087	GN 1/4	100
17	993088	GN 1/4	150
18	993089	GN 1/6	65
19	993090	GN 1/6	100
20	993091	GN 1/6	150
21	993092	GN 1/9	65
22	993093	GN 1/9	100

lids

1

2

fig.	GEV No.	size	material
1	993094	GN 1/1	polycarbonate
1	993095	GN 1/2	polycarbonate
1	993096	GN 1/3	polycarbonate
1	993097	GN 1/4	polycarbonate
1	993098	GN 1/6	polycarbonate
2	993074	GN 1/1	stainless steel 18/10
2	993075	GN 2/3	stainless steel 18/10
2	993076	GN 1/2	stainless steel 18/10
2	993077	GN 1/3	stainless steel 18/10
2	993078	GN 1/4	stainless steel 18/10
2	993079	GN 1/6	stainless steel 18/10
2	993080	GN 1/9	stainless steel 18/10

bridges

1

technical data:
material stainless steel

fig.	GEV No.	L1 (mm)	L2 (mm)	W (mm)	H (mm)	Qty (pcs)
1	692378	325	295	23	14	1
1	692262	530	550	23	14	1

refrigeration cycle components

cooling water regulators

JOHNSON CONTROLS

1

technical data:
water connection 3/8"
connection 7/16" UNF (1/4" SAE)
water pressure max. 10bar
water temperature max. 90°C
capillary pipe length 750mm

fig.	GEV No.	type	pressure range (bar)
1	541190	V46AA-9606	5-23
1	541189	V46AA-9608	5-18
1	541150	V46AA-9609	5-23

1

technical data:
water connection 3/8"
connection 6mm soldering connection
water pressure max. 10bar
water temperature max. 90°C
capillary pipe length 750mm

fig.	GEV No.	type	pressure range (bar)
1	541483	V46AA-9950	5-18

1

technical data:
water connection 3/8"
connection 6mm soldering connection
water pressure max. 18bar
water temperature max. 90°C
capillary pipe length 750mm

fig.	GEV No.	type	pressure range (bar)
1	541186	V46SA-9951	5-23
1	541839	V46SA-9952	5-23

CASTEL

1

technical data:
water pressure max. 10bar
water temperature max. 80°C

fig.	GEV No.	water connection	type	pressure range (bar)	Kv (m^3/h)
1	370798	G 3/8"	3210/03	5-18	2
1	370794	G 1/2"	3210/04	5-18	3
1	370799	G 3/4"	3210/06	5-18	4.7

expansion valves

CASTEL

valves

1

technical data:
inlet 5/8" UNF (3/8" SAE)
outlet 3/4" UNF (1/2" SAE)

fig.	GEV No.	type	coolant	pressure compensation
1	750498	2220/4	R134a	-
1	750486	2230/4	R404a/R507	-

2

technical data:
inlet 5/8" UNF (3/8" SAE)
outlet 3/4" UNF (1/2" SAE)

fig.	GEV No.	type	coolant	pressure compensation
2	750499	2220/4E	R134a	1/4"
2	750500	2230/4E	R404a/R507	1/4"

nozzle inserts

pos.	GEV No.	size	type	pos.	GEV No.	size	type
1	750487	0X	220X	5	750491	03	2203
2	750488	00	2200	6	750492	04	2204
3	750489	01	2201	7	750493	05	2205
4	750490	02	2202	8	750494	06	2206

SECOP DANFOSS

valves

1

fig.	1	1
GEV No.	750013	750015
type	TEN2/068Z3348	TES2/068Z3403
coolant	R134a	R404a/R507
inlet	5/8" UNF (3/8" SAE)	5/8" UNF (3/8" SAE)
outlet	3/4" UNF (1/2" SAE)	3/4" UNF (1/2" SAE)
pressure compensation	1/4"	1/4"

Find the complete and up-to-date range of products in our GEV Webshop

2

fig.	2	2
GEV No.	750519	750520
type	TEN2/068Z3385	TES2/068Z3415
coolant	R134a	R404a/R507
inlet	3/8“	3/8“
outlet	1/4“ ODF	1/4“ ODF
pressure compensation	6mm ODM	6mm ODM

3

fig.	3	3
GEV No.	750012	750014
type	TN2/068Z3346	TS2/068Z3400
coolant	R134a	R404a/R507
inlet	5/8“ UNF (3/8“ SAE)	5/8“ UNF (3/8“ SAE)
outlet	3/4“ UNF (1/2“ SAE)	3/4“ UNF (1/2“ SAE)
pressure compensation	-	-

4

5

fig.	4	5
GEV No.	750521	750522
type	TS2/068Z3414	TUA/068U2200
coolant	R404a/R507	R134a
inlet	3/8“	6mm ODF
outlet	1/4“ ODF	12mm ODF
pressure compensation	-	-

6

fig.	6
GEV No.	750016
type	TUB/068U2028
coolant	R134a
inlet	6mm ODF
outlet	12mm ODF
pressure compensation	-

nozzle inserts

pos.	GEV No.	size	type	application
1	750020	0X	068-2002	T/TE 2
2	750021	00	068-2003	T/TE 2
3	750022	01	068-2010	T/TE 2
4	750023	02	068-2015	T/TE 2
5	750024	03	068-2006	T/TE 2
6	750483	04	068-2007	T2/TE2
7	750484	05	068-2008	T2/TE2
8	750485	06	068-2009	T2/TE2

valves

non-return valves

1

technical data:
pressure max 45bar
temperature range -40 up to +105°C

fig.	GEV No.	type	connection	throughput (m^3/h)
1	750561	3132/2	1/4” ODS	0.5
1	750560	3132/5	5/8” ODS (16mm)	3.3
1	750558	3132/M10	10mm ODS	1.5
1	750559	3132/M12	12mm ODS	1.8

ball check valves

1

technical data:
pressure max 45bar
temperature range -40 up to +150°C

fig.	GEV No.	type	DN (mm)	pipe ø
1	750534	6570/2	10	1/4”
1	750537	6570/5	15	5/8” - 16mm
1	750535	6570/M10	10	10mm
1	750536	6570/M12	10	12mm

2

technical data:
pressure max 45bar
temperature range -40 up to +150°C

fig.	GEV No.	type	DN (mm)	pipe ø
2	750540[1]	6570/5A	15	5/8" - 16mm
2	750538[1]	6570/M10A	10	10mm
2	750539[1]	6570/M12A	10	12mm

[1]with Schrader valve

shut-off valves

2-way

1

technical data:
pressure max 45bar

fig.	GEV No.	type	connection	throughput (m^3/h)	temp. (°C)
1	750551	6010/2	1/4" SAE	0.27	-40 up to +130
1	750552	6410/2	1/4" SAE	0.4	-40 up to +110
1	750553	6410/3	3/8" SAE	1	-40 up to +110
1	750554	6410/4	1/2" SAE	1.45	-40 up to +110

2

technical data:
pressure max 45bar

fig.	GEV No.	type	connection	throughput (m^3/h)	temp. (°C)
2	750555	6420/2	1/4" ODS	0.4	-40 up to +110
2	750556	6420/M10	10mm ODS	1	-40 up to +110
2	750557	6420/M12	12mm ODS	1.45	-40 up to +110

3-way

1

technical data:
connection 1 7/16" UNF (1/4" SAE)
connection 2 5/8" UNF (3/8" SAE)
connection 3 8mm soldering connection
pressure max 30bar

fig.	GEV No.	type	throughput (m^3/h)	temp. (°C)
1	750073	6070/23M8	1.29	-60 up to +120

line piercing valves

1

2

fig.	GEV No.	type	connection	pipe ø
1	750550	8330/A	1/4" SAE	6-10mm
2	750549	BPV 21	1/4" SAE	12,7-15,8mm
2	750548	BPV 31	1/4" SAE	6,3-7,9-9,5mm

reversing valves

1

2

fig.	1	2
GEV No.	370797	370791
type	4-way	4-way
type	V1-408050100	V2-408060200
inlet	1/2" (12.84mm)	1/2" (12.84mm)
outlet	5/16" (8.01mm)	3/8" (9.67mm)
power range (R407C)	1.41-4.57 kW	2.81-6.33 kW
power range (R410A)	1.76-5.98 kW	3.17-7.74 kW
power range (R134A)	1.41-3.87 kW	2.46-4.92 kW

Find the complete and up-to-date range of products in our GEV Webshop

3

4

fig.	3	4
GEV No.	370795	370796
type	4-way	4-way
type	V3-412080800	V6-412080100
inlet	3/4“ (19.18mm)	3/4“ (19.18mm)
outlet	1/2“ (12.84mm)	1/2“ (12.83mm)
power range (R407C)	3.87-9.85 kW	3.87-18.99 kW
power range (R410A)	4.57-12.31 kW	4.57-23.92 kW
power range (R134A)	3.17-7.74 kW	3.17-14.77 kW

5

6

fig.	5	6
GEV No.	370793	370792
type	4-way	4-way
type	V6-414080100	V10-414120100
inlet	7/8“ (22.36mm)	7/8“ (22.35mm)
outlet	1/2“ (12.83mm)	3/4“ (19.18mm)
power range (R407C)	3.87-18.99 kW	11.25-33.06 kW
power range (R410A)	4.57-23.92 kW	13.01-41.85 kW
power range (R134A)	3.17-14.77 kW	9.85-26.03 kW

spare parts and accessories

1

fig.	GEV No.	description
1	371306	solenoid coil Ranco model LDK-41 208/240VAC 50/60Hz 5/4W cable length 2000mm
1	371302[1]	solenoid coil Ranco model LDK-41 230 50/60Hz 5/4W cable length 1200mm green

[1]incl. cable 1200mm

indicators

CASTEL

1

technical data:
version with indicator
temperature range -30 jusqu’à +110°C

fig.	GEV No.	type	connection
1	750070	3750/22	7/16” UNF (1/4” SAE)
1	750008	3950/33	5/8” UNF (3/8” SAE)
1	750415	3950/55	7/8” UNF (5/8” SAE)

2

technical data:
version with indicator
temperature range -30 jusqu’à +110°C

fig.	GEV No.	type	connection
2	750072	3750/44	3/4” UNF (1/2” SAE)

3

technical data:
version with indicator
temperature range -30 jusqu’à +110°C

fig.	GEV No.	type	connection
3	750060	3910/22	7/16” UNF (1/4” SAE)

4

technical data:
version with indicator
temperature range -30 jusqu’à +110°C

fig.	GEV No.	type	connection
4	750061	3910/33	5/8” UNF (3/8” SAE)
4	750424	3910/44	1/2” SAE

5

technical data:
version with indicator
temperature range -30 jusqu’à +110°C

fig.	GEV No.	type	connection
5	750417	3940/2	ODS 1/4”
5	750419	3940/3	ODS 3/8”
5	750421	3940/4	ODS 1/2”
5	750422	3940/5	ODS 5/8”-16mm
5	750418	3940/M10	ODS 10mm
5	750420	3940/M12	ODS 12mm
5	750423	3940/M18	ODS 18mm

SECOP DANFOSS

1

technical data:
version with indicator
temperature range -50 up to +80°C

fig.	GEV No.	type	connection
1	750413	SGN 10	5/8" UNF (3/8" SAE)
1	750412	SGN 6	7/16" UNF (1/4" SAE)

2

technical data:
version with indicator
temperature range -50 up to +80°C

fig.	GEV No.	type	connection
2	750066	SGN 10	ODS 10mm
2	750414	SGN 6S	ODS 6mm

filter driers

CASTEL

STANDARD series

suitable for refrigerants R12, R22, R134a, R404A, R407C, R410A, R502, R507

1

fig.	GEV No.	type	connection	volume (cm^3)
1	750040	4303/2	7/16" UNF (1/4" SAE)	50
1	750427	4303/3	5/8" UNF (3/8" SAE)	50
1	750041	4305/2	7/16" UNF (1/4" SAE)	80
1	750042	4305/3	5/8" UNF (3/8" SAE)	80
1	750043	4308/2	7/16" UNF (1/4" SAE)	130
1	750044	4308/3	5/8" UNF (3/8" SAE)	130
1	750078	4308/4	3/4" UNF (1/2" SAE)	130
1	750079	4316/2	7/16" UNF (1/4" SAE)	250
1	750046	4316/3	5/8" UNF (3/8" SAE)	250
1	750081	4316/4	3/4" UNF (1/2" SAE)	250
1	750084	4316/5	7/8" UNF (5/8" SAE)	250

2

fig.	GEV No.	type	connection	volume (cm^3)
2	750082	4303/2F	7/16" UNF (1/4" SAE)	50
2	750426	4305/2F	7/16" UNF (1/4" SAE)	80
2	750083	4308/3F	5/8" UNF (3/8" SAE)	130

1

fig.	GEV No.	type	connection	volume (cm^3)
1	750038	4303/2S	ODS 1/4"-ODM 3/8"	50
1	750039	4305/2S	ODS 1/4"-ODM 3/8"	80
1	750074	4316/M105	ODS 10mm	250

GO GREEN series

suitable for refrigerants R290, R600, R600a

1

fig.	GEV No.	type	connection	volume (cm^3)
1	750562	4303V/2S	ODS 1/4"-ODM 3/8"	50
1	750563	4305V/3S	ODS 3/8"-ODM 1/2"	80
1	750564	4305V/M10S	ODS 10mm-ODM 12mm	80
1	750565	4308V/3S	ODS 3/8"-ODM 1/2"	130
1	750568	4308V/4S	ODS 1/2"-ODM 5/8"(16mm)	130
1	750566	4308V/M10S	ODS 10mm-ODM 12mm	130
1	750567	4308V/M12S	ODS 12mm-ODM 14mm	130
1	750569	4316V/3S	ODS 3/8"-ODM 1/2"	250
1	750570	4316V/M10S	ODS 10mm-ODM 12mm	250
1	750571	4316V/M12S	ODS 12mm-ODM 14mm	250

Find the complete and up-to-date range of products in our GEV Webshop

SECOP DANFOSS

pos.	GEV No.	type	connection	volume (cm^3)
1	750037	DCL 032	7/16" UNF (1/4" SAE)	41
2	750429	DCL 164	3/4" UNF (1/2" SAE)	234
3	750030	DML 032	7/16" UNF (1/4" SAE)	41
4	750031	DML 032S	7/16" UNF (1/4" SAE)	41
5	750032	DML 052	7/16" UNF (1/4" SAE)	67
6	750033	DML 053	5/8" UNF (3/8" SAE)	67
7	750034	DML 082	7/16" UNF (1/4" SAE)	104
8	750035	DML 083	5/8" UNF (3/8" SAE)	104
9	750428	DML 162	7/16" UNF (1/4" SAE)	225
10	750036	DML 163	5/8" UNF (3/8" SAE)	225

refrigeration pipes

connections

1

2

3

fig.	GEV No.	ø (mm)	fig.	GEV No.	ø (mm)	fig.	GEV No.	ø (mm)
1	694752	6	2	694757	6	3	694762	6
1	694753	8	2	694758	8	3	694763	8
1	694754	10	2	694759	10	3	694764	10
1	694755	12	2	694760	12/14	3	694765	12
1	694756	16	2	694761	16	3	694766	16

screw connections

connections

1

2

3

fig.	GEV No.	type	connection	Int. Code
1	750457	7050/2	1/4" SAE	US4-4
1	750458	7050/3	3/8" SAE	US4-6
1	750459	7050/4	1/2" SAE	US4-8
2	750475	7110/2	1/4" SAE	U2-4
2	750474	7110/3	3/8" SAE	U2-6
2	750473	7110/4	1/2" SAE	U2-8
3	750478	7130/2	1/4" SAE - 1/4" NPT	U1-4B
3	750477	7140/21	1/4" SAE - 1/8" NPT	U1-4A
3	750476	7140/32	3/8" SAE - 1/4" NPT	U1-6B

4

5

6

fig.	GEV No.	type	connection	Int. Code
4	750464[1]	7154/2	1/4" SAE - 20-14L IT	-
4	750465[1]	7156/2	1/4" SAE - W21.8-14R IT	-
5	750480	7310/2	1/4" SAE	T2-4
6	750481	8380/X06	1/4" SAE	-

[1]for freon bottle

Schrader valves

Schrader valves (complete)

1

2

fig.	GEV No.	description
1	750100	Schrader valve complete connection 1/4" SAE
2	750101	Schrader valve complete connection 1/4" SAE L 130mm

valve bodies

1

2

3

fig.	GEV No.	type	TS	connection
1	750472	8350/22	1/4" SAE	tube ø1/4" OD - ø3/8" ID
2	750471	8350/X09	5/16" SAE	tube ø1/4" OD
3	750470	8351/2	1/4" SAE	tube ø6mm OD - ø8/10mm ID

4

fig.	GEV No.	type	TS	connection
4	750481	8380/X06	1/4"	1/4" SAE

valve inserts

1

fig.	GEV No.	description
1	750098	Schrader valve CASTEL 8394/B

accessories

1 2 3

fig.	GEV No.	description
1	750479	screw cap CASTEL 8392/A size 1/4" SAE for Schrader valve connection 1/4" Qty 1
2	750468	screw cap CASTEL 8392/B size 1/4" SAE for Schrader valve connection 1/4" Qty 1
3	750467	gasket CASTEL truncated conical connection 3/8" SAE copper Qty 20 pieces
3	750466	gasket CASTEL truncated conical connection 1/4" SAE copper Qty 20 pieces

4

fig.	GEV No.	description
4	750469	mounting wrench 8390/A Qty 1

union nuts

1 2 3

fig.	GEV No.	type	size	pipe ø	Int. Code
1	750050	7010/22	1/4" SAE	1/4" - 6mm	NS4-4
1	750460	7010/33	3/8" SAE	3/8"	NS4-6
1	750463	7010/44	1/2" SAE	1/2"	NS4-8
1	750065	7010/55	5/8" SAE	5/8" - 16mm	NS4-10
2	750057	7020/32	3/8" SAE	1/4" - 6mm	NRS4-64
2	750462	7020/43	1/2" SAE	3/8"	NRS4-86
2	750461	7020/54	5/8" SAE	1/2"	NRS4-108
3	750051	7030/3M8	3/8" SAE	8mm	-
3	750052	7030/3M10	3/8" SAE	10mm	-
3	750053	7030/4M10	1/2" SAE	10mm	-
3	750054	7030/4M12	1/2" SAE	12mm	-
3	750063	7030/5M12	5/8" SAE	12mm	-
3	750064	7030/5M14	5/8" SAE	14mm	-
3	750055	7030/6M14	3/4" SAE	14mm	-
3	750056	7030/6M18	3/4" SAE	18mm	-

evaporators

for fridges

universal

with axial fan - side mounting

1

technical data:
thickness 70mm
heat output 300W
version with 2 fans
connection 3/8"mm
material stainless steel

fig.	GEV No.	L (mm)	H (mm)	fan power	fan type
1	750434	360	295	110m³/h - 1.5m/s	2x 80x80mm
1	750435	380	425	150m³/h - 2.25m/s	2x 120x120mm

with axial fan - centre mounting

1

technical data:
thickness 70mm
heat output 300W
version with 2 fans
connection 3/8"mm
material stainless steel

fig.	GEV No.	L (mm)	H (mm)	fan power	fan type
1	750438	350	295	110m³/h - 1.5m/s	2x 80x80mm
1	750437	380	425	130m³/h - 1.8m/s	2x 120x120mm
1	750436	380	425	135m³/h - 2.1m/s	2x 120x120mm
1	750439	380	425	150m³/h - 2.25m/s	2x 120x120mm

Find the complete and up-to-date range of products in our GEV Webshop

with cross flow fan - side mounting

1

technical data:
thickness 70mm
heat output 300W
version with 1 fan
connection 3/8"mm
material stainless steel

fig.	GEV No.	L (mm)	H (mm)	fan power	fan type
1	750441	380	425	130m³/h - 1.9m/s	1x ø45x180mm
1	750440	380	425	135m³/h - 2m/s	1x ø45x180mm

with cross flow fan - centre mounting

1

technical data:
thickness 70mm
heat output 300W
version with 2 fans
connection 3/8"mm
material stainless steel

fig.	GEV No.	L (mm)	H (mm)	fan power	fan type
1	750443	380	425	118m³/h - 1.9m/s	2x ø45x60mm
1	750442	380	425	122m³/h - 2m/s	2x ø45x60mm

for walk-in fridges

1

technical data:
thickness 125/80mm
heat output 300W
version with 1 fan
connection 3/8"
suitable for walk-in fridge

fig.	GEV No.	L (mm)	H (mm)	fan power	fan type
1	750446[1]	350	435	195m³/h - 2.5m/s	1x ø200mm
1	750495[2]	350	435	195m³/h - 2.5m/s	1x ø200mm
1	750447[1]	405	460	203m³/h - 2.2m/s	1x ø250mm
1	750496[2]	405	460	203m³/h - 2.2m/s	1x ø250mm

[1]aluminium [2]stainless steel

1

technical data:
thickness 125/80mm
heat output 650W
version with 2 fans
connection 3/8"
suitable for walk-in fridge

fig.	GEV No.	L (mm)	H (mm)	fan power	fan type
1	750448[1]	750	460	442m³/h - 2.2m/s	2x ø250mm
1	750497[2]	750	460	442m³/h - 2.2m/s	2x ø250mm

[1]aluminium [2]stainless steel

shelves and shelf rails

shelves

pos.	GEV No.	W (mm)	L (mm)	material
1	970120	325	530	chrome-plated steel
2	970125	325	530	plastic-coated steel
3	970122	325	530	stainless steel
4	970132	400	600	plastic-coated steel
5	970077	400	600	stainless steel
6	970084	530	530	plastic-coated steel
7	970080	530	530	stainless steel

pos.	GEV No.	W (mm)	L (mm)	material
1	970133	530	600	plastic-coated steel
2	970081	530	600	stainless steel
3	970121	530	650	chrome-plated steel
4	970126	530	650	plastic-coated steel
5	970123	530	650	stainless steel

pos.	GEV No.	W (mm)	L (mm)	material
1	970473	530	550	plastic-coated steel
2	970527	530	650	chrome-plated steel
3	970556	530	650	plastic-coated steel
4	970643	555	510	plastic-coated steel
5	970557	555	670	plastic-coated steel

shelf rails

rail supports

fig.	GEV No.	L (mm)	W (mm)	aperture (mm)	HD (mm)	material
1	690330	1000	22	3x8	12.5	stainless steel

shelf supports

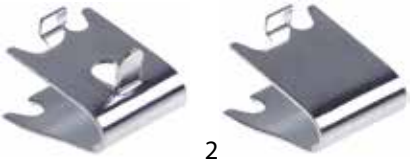

fig.	GEV No.	L1 (mm)	W (mm)	H (mm)	material	Qty (pcs)
1	694701	31	22	17	stainless steel	12
2	694700	31	22	18	stainless steel	12

gaskets

refrigeration gaskets

gaskets for walk-in fridges

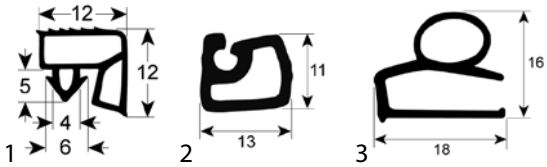

fig.	GEV No.	profile	Qty	suitable for
1	902081	9957	6m	—
1	901983	9957	25m	Priolinox
2	902092	9976	6m	—
2	901785	9976	25m	Priolinox
3	901107	9210	supplied by meter	—

fig.	GEV No.	profile	Qty	suitable for
4	902085	9903	6m	—
4	901987	9903	25m	—
5	902084	9902	6m	—
5	901986	9902	25m	—
6	902082	9900	6m	—
6	901984	9900	25m	—

Find the complete and up-to-date range of products in our GEV Webshop

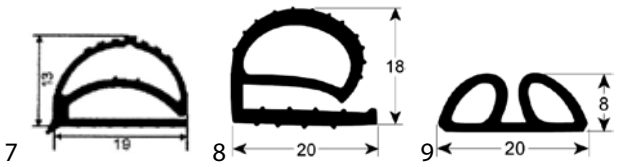

fig.	GEV No.	profile	Qty	suitable for
7	900786	9158	25m	—
8	902086	9160	6m	—
8	901988	9160	25m	—
9	902083	9901	6m	—
9	901985	9901	25m	—

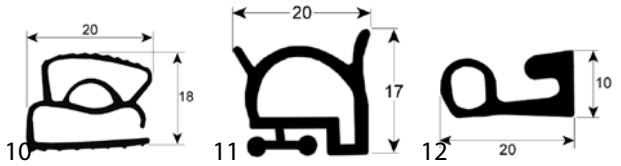

fig.	GEV No.	profile	Qty	suitable for
10	901106	9211	supplied by meter	—
11	902087	9974	6m	—
11	901991	9974	25m	—
12	900917	9985	24m	—

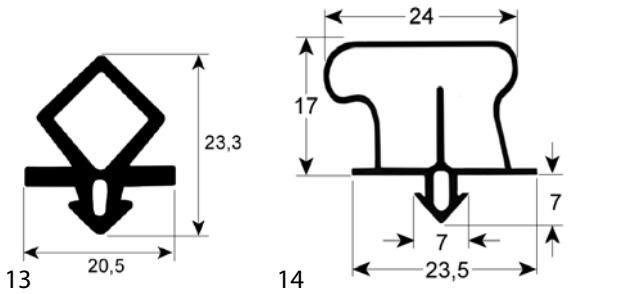

fig.	GEV No.	profile	Qty	suitable for
13	902093	9935	6m	—
13	901786	9935	25m	—
14	901919	9920	4m	—

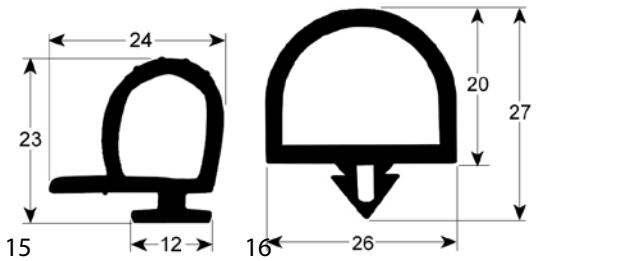

fig.	GEV No.	profile	Qty	suitable for
15	902091	9980	6m	—
15	901784	9980	25m	—
16	902094	9991	6m	—
16	901787	9991	25m	—

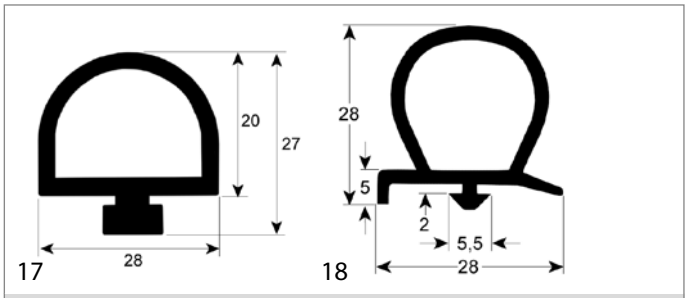

fig.	GEV No.	profile	Qty	suitable for
17	901115	9992	supplied by meter	Frigorbox
18	901996	9994	25m	—

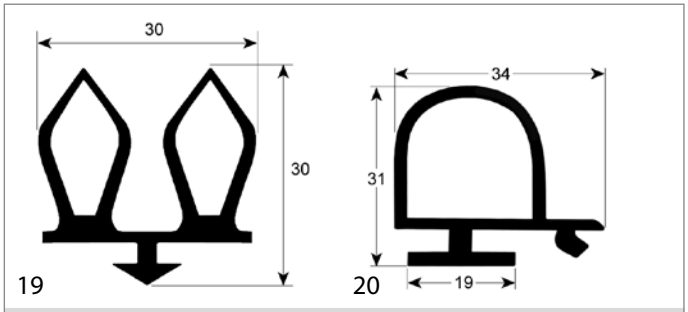

fig.	GEV No.	profile	Qty	suitable for
19	901121	9937	6m	Frigorbox
19	901992	9937	25m	—
20	902096	9981	6m	—
20	901789	9981	25m	—

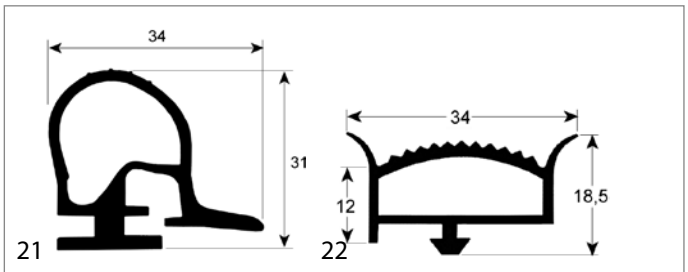

fig.	GEV No.	profile	Qty	suitable for
21	901124	9982	supplied by meter	MTH
22	902089	9779	6m	—
22	901994	9779	25m	—

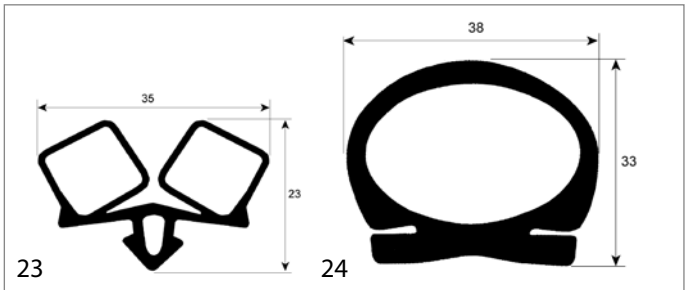

fig.	GEV No.	profile	Qty	suitable for
23	902095	9936	6m	—
23	901788	9936	25m	—
24	901118	9983	supplied by meter	Frigorbox

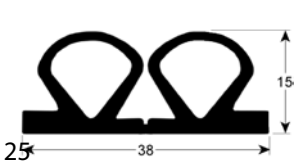

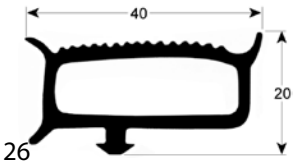

fig.	GEV No.	profile	Qty	suitable for
25	901108	9905	3m	—
25	901989	9905	25m	—
26	902088	9780	6m	—
26	901993	9780	25m	—

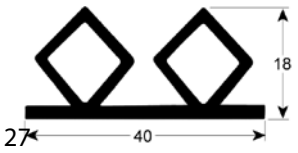

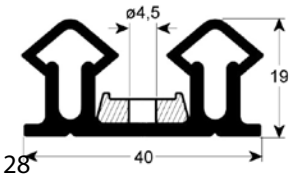

fig.	GEV No.	profile	Qty	suitable for
27	902090	9904	6m	—
27	901995	9904	25m	—
28	902066[1]	9987	6m	—
28	902064	9987	25m	—

[1]incl. mounting rail

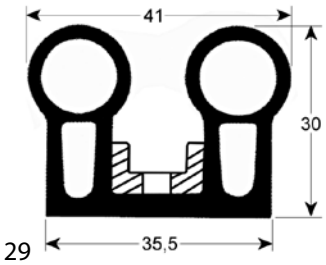

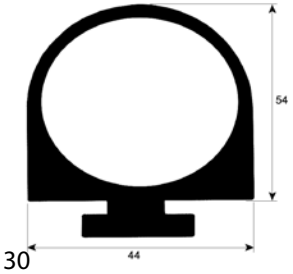

fig.	GEV No.	profile	Qty	suitable for
29	901582	9986	2.5m	—
29	901126	9986	10m	Surfrigo
30	901116	9993	supplied by meter	Frigorbox

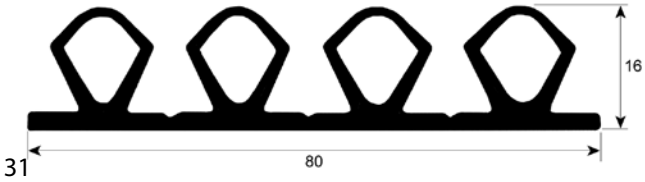

fig.	GEV No.	profile	Qty	suitable for
31	901109	9906	4m	—
31	901990	9906	25m	—

accessories

1

fig.	GEV No.	description
1	801490	gasket cleaner PROFESSIONAL - spray bottle 500ml cleans and disinfects gaskets and interiors of fridges.

1

fig.	GEV No.	description
1	902019	gasket cutting shears 45-120° 0,35kg

1 2

fig.	GEV No.	description
1	890136	LOCTITE® 401™ - tube 3g Designed for the assembly of difficult-to-bond materials which require uniform stress distribution and strong tension and/or shear strength. The product provides rapid bonding of a wide range of materials, including metals, plastics and elastomers. LOCTITE® 401™ is also suited for bonding porous materials such as wood, paper, leather and fabric.
2	890138	LOCTITE® 454™ - tube 20g Instant adhesive designed for the assembly of difficult-to-bond materials which require uniform stress distribution and high tensile and/or shear strength. The product provides for the rapid bonding of a wide range of materials, including metals, plastics and elastomers. The gel consistency enables overhead and vertical application. LOCTITE® 454™ is also suited to bonding porous materials such as wood, paper, leather and fabric.

Find the complete and up-to-date range of products in our GEV Webshop

equipment-specific units

for cold storage cells

pressure compensation valves

1

fig.	GEV No.	description
1	750334	pressure compensation valve mounting ø 25mm MicroElebar T.N. unheated for walk-in fridge

2

3

fig.	GEV No.	description
2	750325	pressure compensation valve mounting ø 215mm MaxiElebar T.M. unheated for walk-in fridge
3	750326	pressure compensation valve mounting ø 215mm MaxiElebar B.T. heated for walk-in fridge

4

5

fig.	GEV No.	description
4	750329	pressure compensation valve mounting ø 67mm MiniElebar Extensible T.N. unheated extendable
5	750330	pressure compensation valve mounting ø 67mm MiniElebar Extensible B.T. heated extendable

6

7

fig.	GEV No.	description
6	750332	pressure compensation valve mounting ø 61mm MiniElebar T.N. unheated for walk-in fridge
7	750333	pressure compensation valve mounting ø 61mm MiniElebar B.T. heated for walk-in fridge

8

9

fig.	GEV No.	description
8	750327	pressure compensation valve mounting ø 81,5mm Elebar T.N. unheated for walk-in fridge
9	750328	pressure compensation valve mounting ø 80,5mm Elebar B.T. heated for walk-in fridge

1

2

3

fig.	GEV No.	description
1	750337	heating element suitable for MaxiElebar B.T. L 108mm W 130mm 220V 32W
2	750336	ventilation grille suitable for Elebar ø 116mm mounting distance 71mm H 36,5mm
3	750335	ventilation grille suitable for MiniElebar ø 86mm mounting distance 69,5mm H 14,5mm

handles

bracket handles

1

2

fig.	GEV No.	L (mm)	H (mm)	MD (mm)	suitable for	Ref. No.
1	690450	275	43	227	Desmon Mercatus	— 42201011
2	690451	426	40	376	Angelo-Po	36M4040

hinges

overlying hinges

RAHRBACH

1

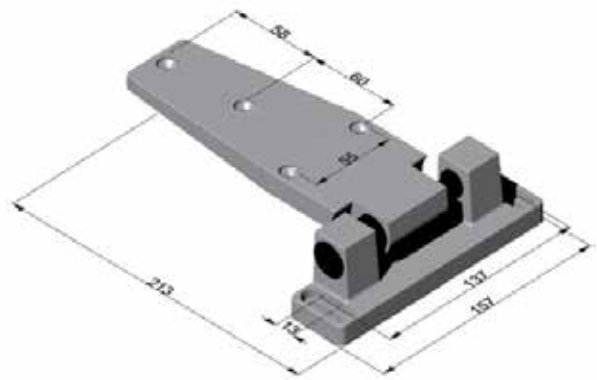

fig.	GEV No.	off-set (mm)	type
1	692442	32	4296

1

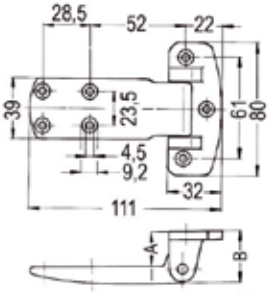

fig.	GEV No.	type	A (mm)	B (mm)
1	690286	4480	20	30
1	690287	4480	24	34

fig.	GEV No.	type	A (mm)	B (mm)
1	690288	4480	28	38

1

fig.	GEV No.	description
1	690319	base plate for block thickness 2mm type 4480

FERMOD

1

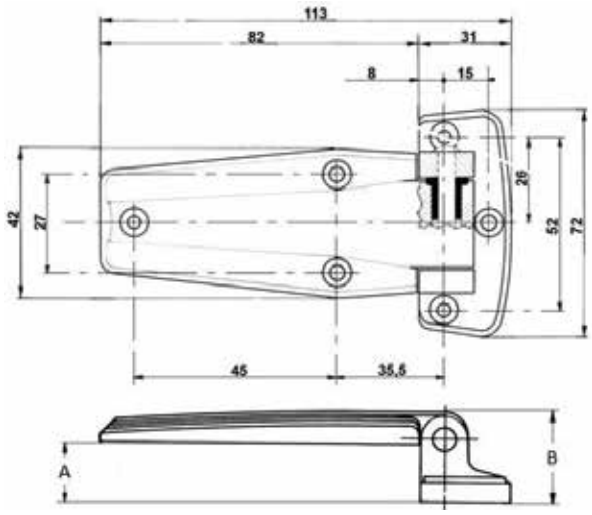

fig.	GEV No.	type	A (mm)	B (mm)
1	700594	710	18	26

fig.	GEV No.	type	A (mm)	B (mm)
1	700567	710	22	30

Find the complete and up-to-date range of products in our GEV Webshop

1

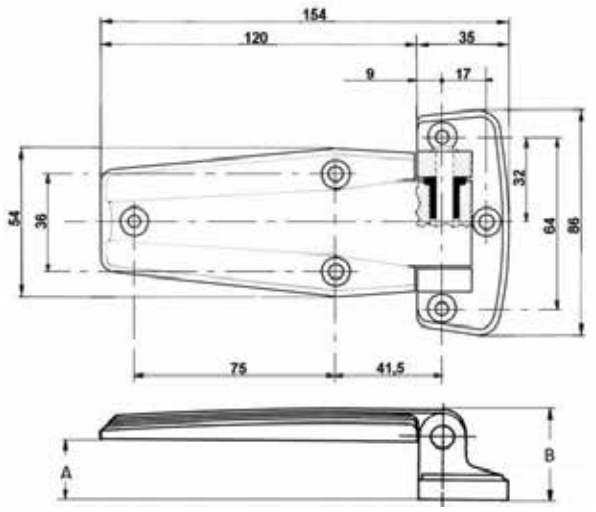

fig.	GEV No.	type	A (mm)	B (mm)	fig.	GEV No.	type	A (mm)	B (mm)
1	700568	720	22	33.5	1	700595	720	27	38.5

spring assisted hinges

CAFF/FERMOD

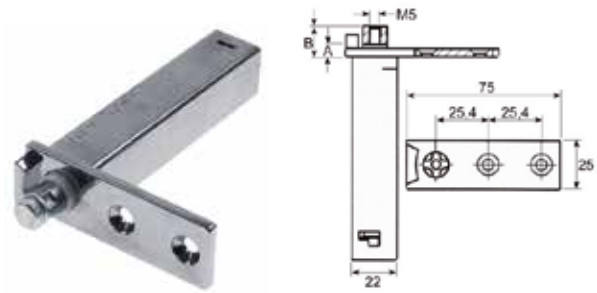

1

fig.	GEV No.	series	MP	A (mm)	B (mm)	intake
1	690494	175	left/right	4	11	torx

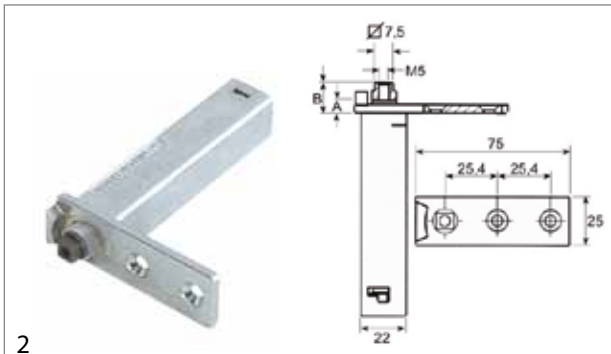

2

fig.	GEV No.	series	MP	A (mm)	B (mm)	intake
2	690574	176	left/right	11	15	7.5x7.5

INTERKLIMAT

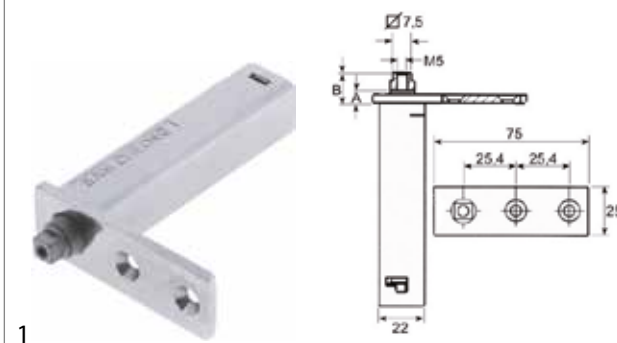

1

fig.	GEV No.	series	MP	A (mm)	B (mm)	intake
1	690622	28L	left/right	13	18	7.5x7.5
1	690714	28XC	left/right	8	13	7.5x7.5
1	701053	28XXC	left/right	5	10	7.5x7.5

edgemount hinges

CAFF/FERMOD

1

2

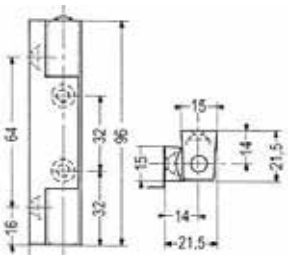

technical data:
length 96mm
hinging left/right
version without lift

fig.	GEV No.	description	series
1	700564	edgemount hinge	G 401
2	700563	edgemount hinge	G 401 PV

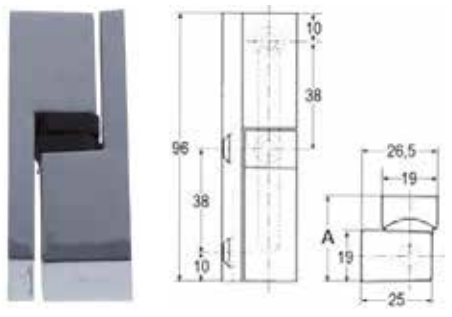

1

technical data:
length 96mm
hinging left/right
version without lift

fig.	GEV No.	description	A (mm)	series
1	690389	edgemount hinge	25	G 306
1	690390	edgemount hinge	30.5	G 306/5

1

fig.	GEV No.	description
1	690393	base plate for Typ 306/307 thickness 10mm

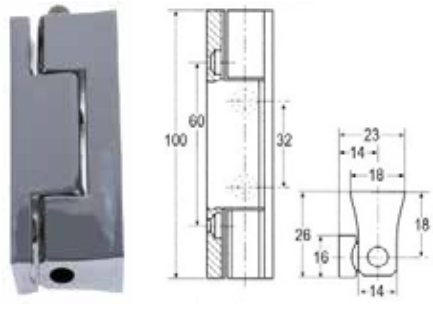

1

technical data:
length 100mm
hinging left/right
version without lift

fig.	GEV No.	description	series
1	690430	edgemount hinge	G 300

1

fig.	GEV No.	description
1	690395	base plate for type 300/303 thickness 5mm L 100mm

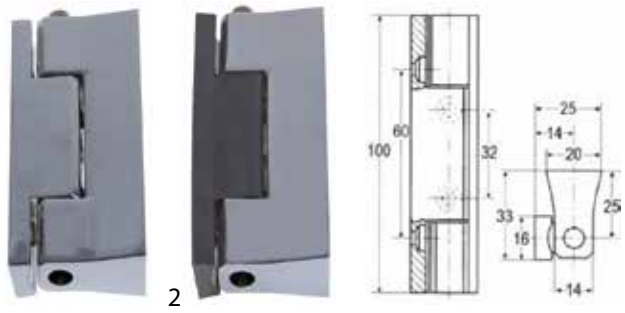

1 2

technical data:
length 100mm
hinging left/right
version without lift

fig.	GEV No.	description	series
1	690431	edgemount hinge	G 303
2	690434	edgemount hinge	G-303 PV

1

fig.	GEV No.	description
1	690395	base plate for type 300/303 thickness 5mm L 100mm

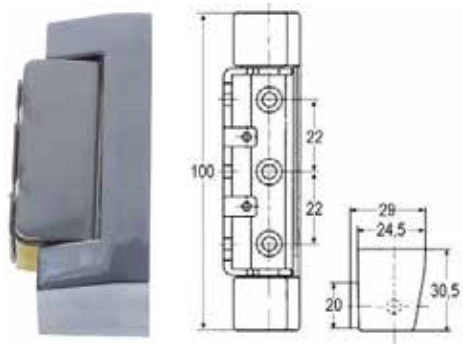

1

technical data:
length 100mm
hinging left/right
version without lift

fig.	GEV No.	description	series
1	690322	edgemount hinge	G 625

1

fig.	GEV No.	description
1	690345	base plate for 625 series thickness 5mm

Find the complete and up-to-date range of products in our GEV Webshop

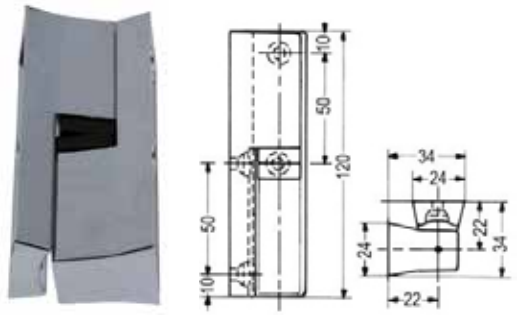

1

technical data:
length 120mm
hinging left/right
version without lift

fig.	GEV No.	description	series
1	700565	edgemount hinge	308

1

fig.	GEV No.	description
1	690411	base plate for type 308 thickness 8mm

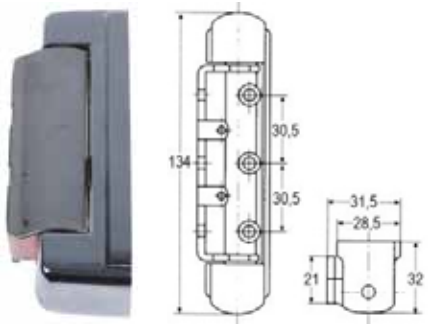

1

technical data:
length 134mm
hinging left/right

fig.	GEV No.	description	version	series
1	690343	edgemount hinge	with spring force	G 426
1	690342	edgemount hinge	without spring force	G 425

1

fig.	GEV No.	description
1	690346	base plate for 425/426 series thickness 5mm

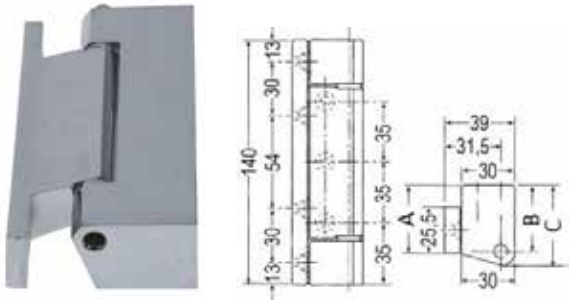

1

technical data:
length 140mm
hinging left/right
version without lift

fig.	GEV No.	description	A (mm)	B (mm)	C (mm)	series
1	700593	hinge	27	26	35.5	G 360
1	700562	edgemount hinge	37	36	45.5	G 361

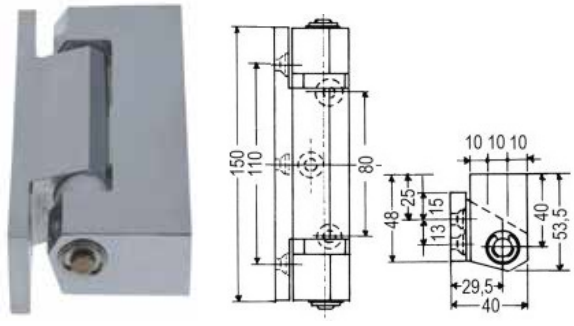

1

technical data:
length 150mm
version with gradient

fig.	GEV No.	description	hinging	series
1	700561	edgemount hinge	left	362
1	700560	edgemount hinge	right	362

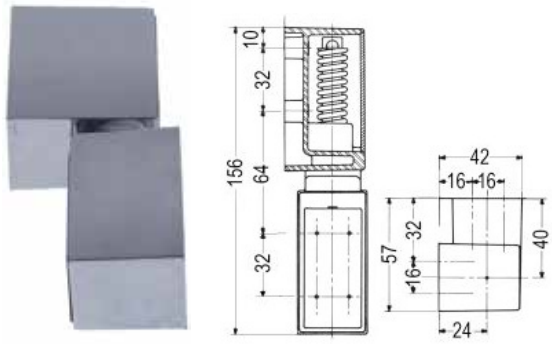

1

technical data:
length 156mm
version with gradient and spring-loaded

fig.	GEV No.	description	hinging	series
1	692447	edgemount hinge	left	466
1	690642	edgemount hinge	right	466

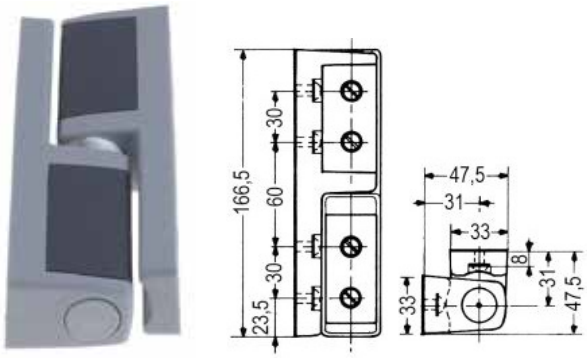

1

technical data:
length 166,5mm
hinging left/right
version with gradient

fig.	GEV No.	description	series
1	700566	edgemount hinge	481

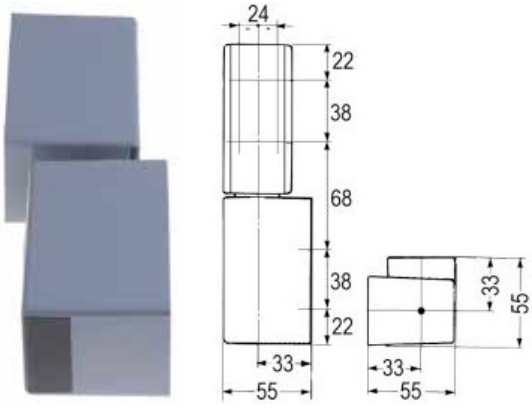

1

technical data:
length 188mm
hinging left/right

fig.	GEV No.	description	version	series
1	690458	edgemount hinge	with gradient	915
1	690805	edgemount hinge	with gradient and spring-loaded	920
1	691641	edgemount hinge	without lift	910

1

fig.	GEV No.	description
1	691642	base plate thickness 5mm plastic L 98mm W 49mm

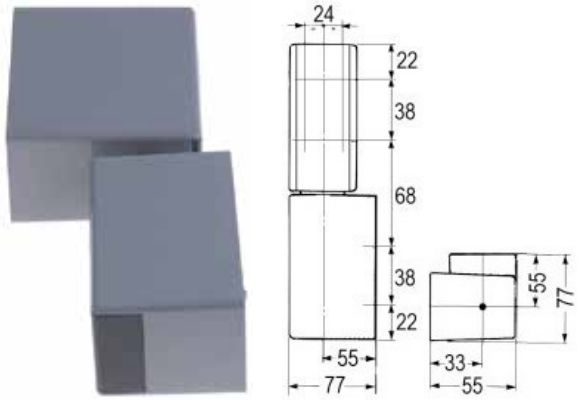

1

technical data:
length 188mm
hinging left/right

fig.	GEV No.	description	version	series
1	691644	edgemount hinge	with gradient	935
1	691643	edgemount hinge	without lift	930

1

fig.	GEV No.	description
1	691642	base plate thickness 5mm plastic L 98mm W 49mm

RAHRBACH

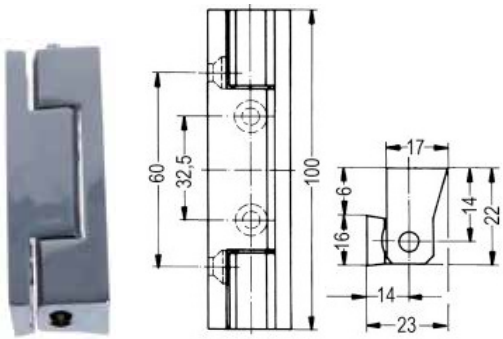

1

technical data:
length 100mm
hinging left/right
version non removable

fig.	GEV No.	description	series
1	690270	edgemount hinge	4484

1

fig.	GEV No.	description
1	690314	base plate for 4513 series thickness 4,5mm

Find the complete and up-to-date range of products in our GEV Webshop

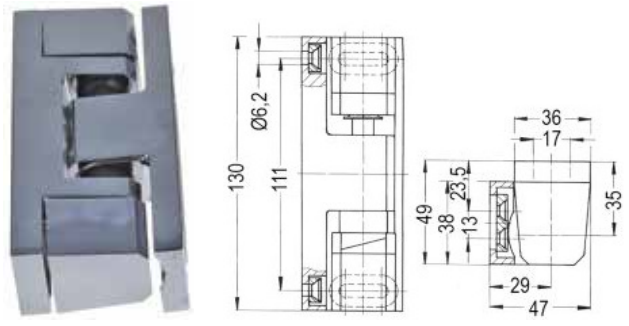

1

technical data:
length 130mm

fig.	GEV No.	description	hinging	version	series
1	690274	edgemount hinge	right	with gradient	4511
1	690273	edgemount hinge	right/left	without lift	4510

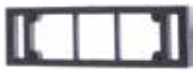

1

fig.	GEV No.	description
1	690313	base plate for 4510/4511 series thickness 5mm

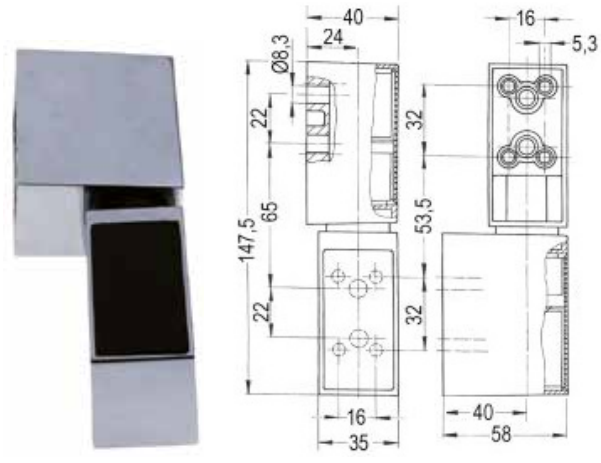

1

technical data:
length 147,5mm
hinging with gradient
version left/right

fig.	GEV No.	description	series
1	700843	hinge	4003

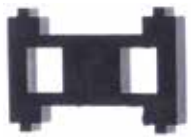

1

fig.	GEV No.	description
1	690311	base plate for 4003 series thickness 5mm

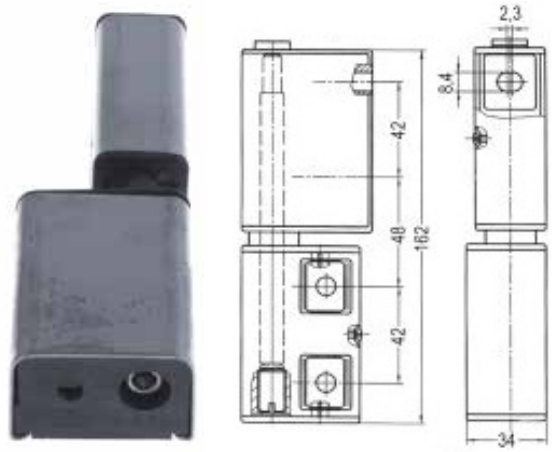

1

technical data:
length 162mm
version with gradient

fig.	GEV No.	description	hinging	series
1	690268	edgemount hinge	left	4006
1	690269	edgemount hinge	right	4006

1

fig.	GEV No.	description
1	690312	base plate for 4004/4006 series thickness 5mm

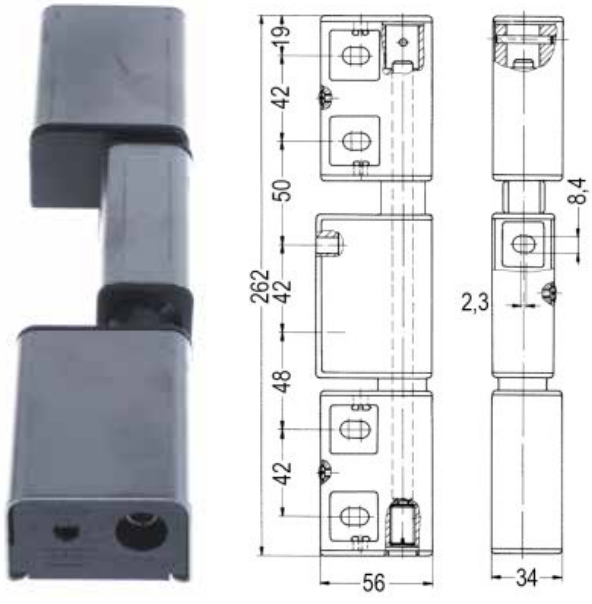

1

technical data:
length 262mm
version with gradient

fig.	GEV No.	description	hinging	series
1	690267	edgemount hinge	left	4004
1	690266	edgemount hinge	right	4004

1

fig.	GEV No.	description
1	690312	base plate for 4004/4006 series thickness 5mm

locks

face mounted latches

RAHRBACH

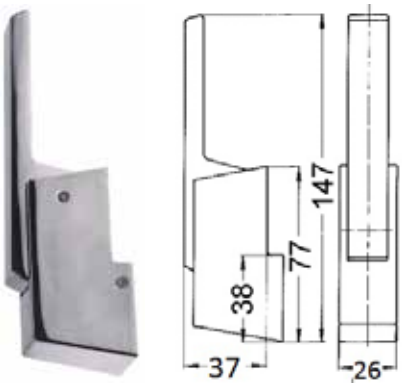

1

fig.	GEV No.	hinging	version	series
1	700657	left/right	non lockable	6172

1

fig.	GEV No.	description
1	700772	door catch H 18-32mm

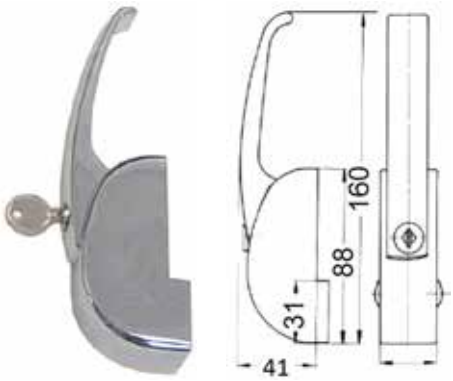

1

fig.	GEV No.	hinging	version	series
1	690235	left/right	lockable	6180

1

fig.	GEV No.	description
1	690236	door catch H 19-32mm L 28mm cooling devices

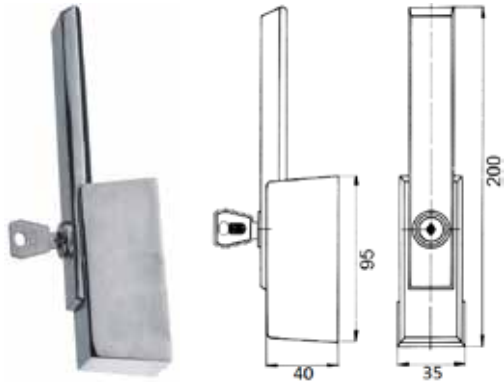

1

fig.	GEV No.	hinging	version	series
1	690234	left/right	lockable	6183

1

fig.	GEV No.	description
1	690233	door catch adjustable type 6172/6183 series
1	700773	door catch H 20-28mm attached

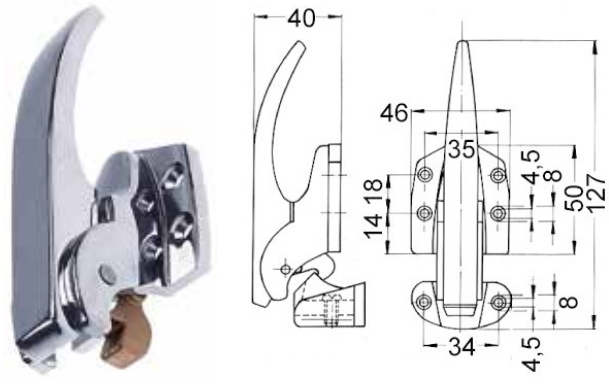

1

fig.	GEV No.	hinging	version	series
1	700658	left/right	non lockable	6770

1

fig.	GEV No.	description
1	700774	door catch W 46mm mounting distance 34mm adjustable

Find the complete and up-to-date range of products in our GEV Webshop

STUV

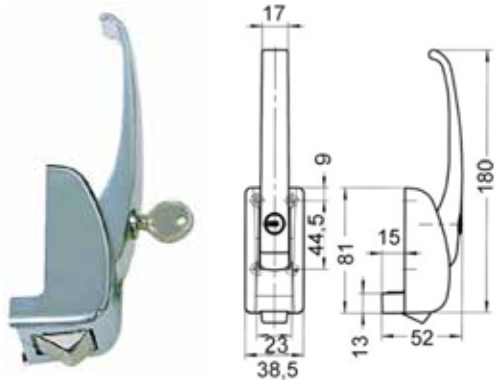

fig.	GEV No.	hinging	version	series
1	690227	left/right	lockable	3.30.0130

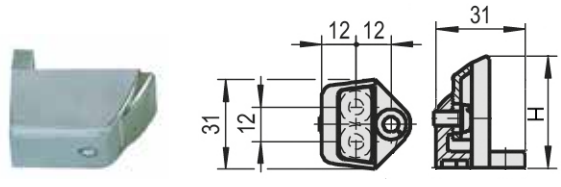

fig.	GEV No.	description	H (mm)	door catch hight (mm)
1	690240	door catch	36	20-25
1	690241	door catch	40	24-29
1	690242	door catch	44	28-33
1	690243	door catch	48	32-37

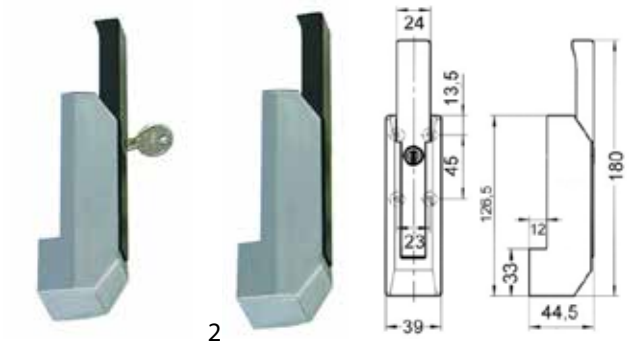

fig.	GEV No.	hinging	version	series
1	690228	left/right	lockable	3.30.0450.0
2	690229	left/right	non lockable	3.30.0451

technical data:
length 39mm
width 32mm
mounting distance 16mm
material zinc die cast

fig.	GEV No.	description	H (mm)	fig.	GEV No.	description	H (mm)
1	690244	door catch	20	1	690246	door catch	28

FERMOD

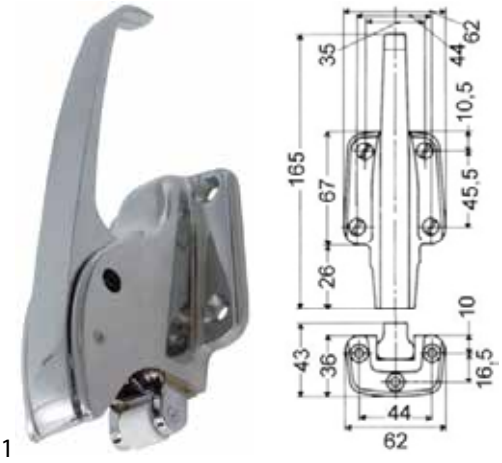

fig.	GEV No.	hinging	version	series
1	700588	left/right	non lockable	651

fig.	GEV No.	description
1	700587	door catch H 50mm settable L 62mm W 35mm mounting distance 44/28mm type 651

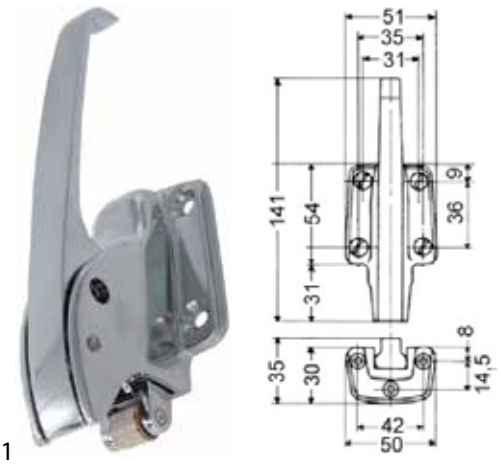

fig.	GEV No.	hinging	version	series
1	700590	left/right	non lockable	652

fig.	GEV No.	description
1	700589	door catch H 50mm adjustable L 62mm W 30mm mounting distance 35/23mm type 652

S&S

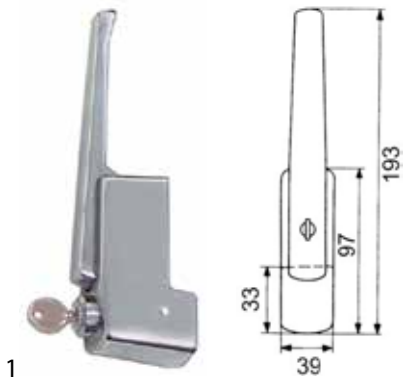

1

fig.	GEV No.	hinging	version	series
1	690215	left/right	lockable	1653

1

fig.	GEV No.	description	H (mm)	type
1	690300	door catch	20	1653
1	690301	door catch	24	1653
1	690302	door catch	28	1653
1	690303	door catch	32	1653

edgemount latches

latches without handle

RAHRBACH

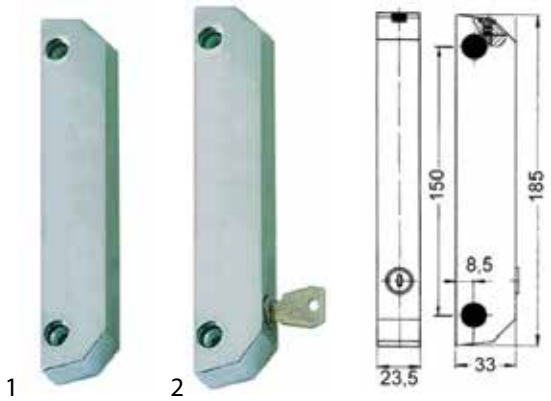

1 2

fig.	GEV No.	L (mm)	MD (mm)	version	type
1	690017	185	150	non lockable	6189
2	690018	185	150	lockable	6189

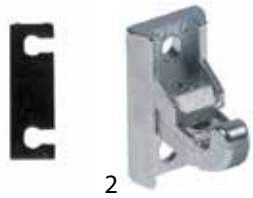

1 2

fig.	GEV No.	description
1	690110	base plate mounting distance 26mm plastic
1	690111	base plate mounting distance 26mm plastic
1	690947	base plate mounting distance 26mm plastic
2	700082	door catch cold/hot drinks

push button latches

RAHRBACH

6186 series

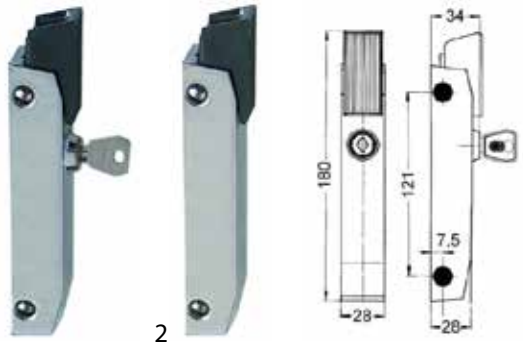

1 2

fig.	GEV No.	L (mm)	MD (mm)	version	type
1	690023	180	121	lockable	6186
2	700045	180	121	non lockable	6186

1 2 3 4

fig.	GEV No.	description
1	690109	base plate H 1mm L 47,5mm W 21mm plastic hole distance 31mm type PRESTO no. 6186
2	690108	base plate H 5mm L 47,5mm W 21mm for swinging strike hole distance 31mm type PRESTO
3	700050	door catch H 5mm L 47mm W 21mm hole distance 31mm with spigot cooling devices type PRESTO no. 6186
4	700051	door catch H 5mm L 48mm W 21mm adjustable hole distance 31mm with spigot type PRESTO

Find the complete and up-to-date range of products in our GEV Webshop

handle latches

CAFF/FERMOD

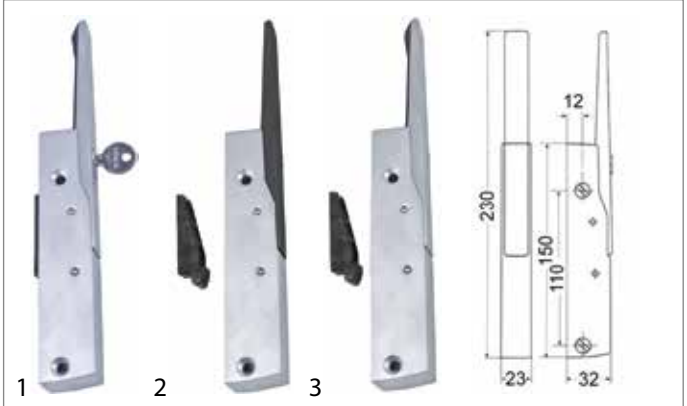

fig.	GEV No.	L (mm)	MD (mm)	version	type
1	690456	150	110	lockable	571
2	690454	150	110	non lockable	560
3	690455	150	110	non lockable	570

fig.	GEV No.	description
1	690445	base plate H 2mm
1	690446	base plate H 5mm
2	690429	door catch CT 25,5mm
2	690428	door catch H 51mm W 13,9mm mounting distance 30mm plastic CT 16,5mm

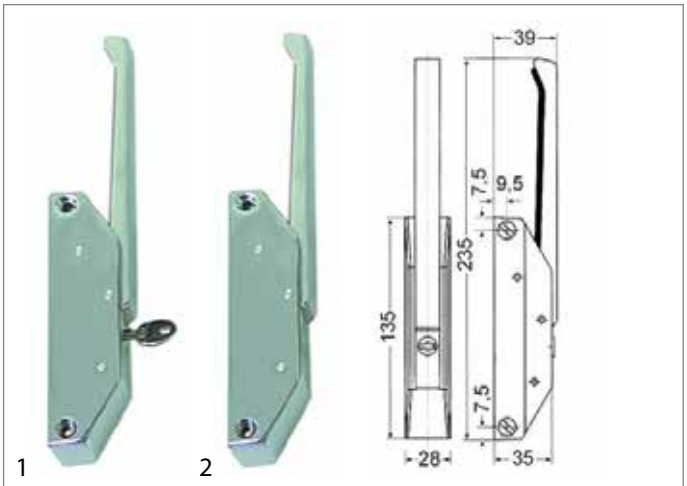

fig.	GEV No.	L (mm)	MD (mm)	version	type
1	690401	135	120	lockable	G 685 C
2	690400	135	120	non lockable	G 680

fig.	GEV No.	A (mm)	B (mm)	C (mm)	D (mm)	material
1	690418	36	19	29	12	zinc-coated steel
2	690419	52	20	30	26-37	zamak
2	700435	58	20	35	42	zamak

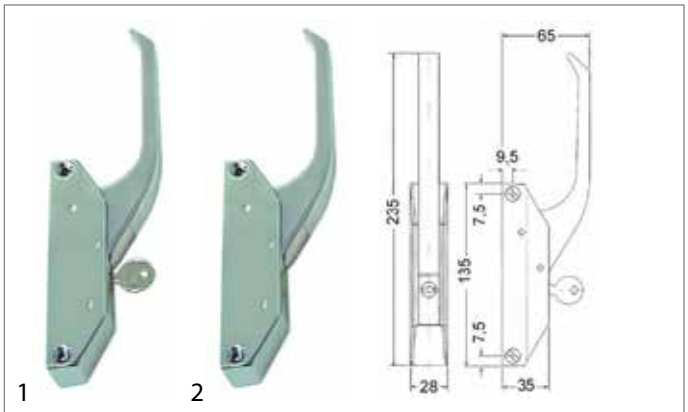

fig.	GEV No.	L (mm)	MD (mm)	version	type
1	690403	135	120	lockable	G 686 C
2	690402	135	120	non lockable	G 681

fig.	GEV No.	A (mm)	B (mm)	C (mm)	D (mm)	material
1	690418	36	19	29	12	zinc-coated steel
2	690419	52	20	30	26-37	zamak
2	700435	58	20	35	42	zamak

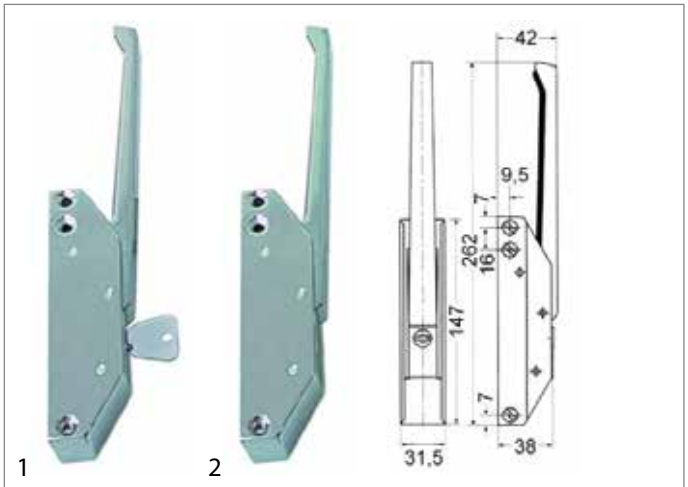

fig.	GEV No.	L (mm)	MD (mm)	version	type
1	690405	147	117/132	lockable	G 695
2	690404	147	117/132	non lockable	G 690

fig.	GEV No.	A (mm)	B (mm)	C (mm)	D (mm)	material
1	690418	36	19	29	12	zinc-coated steel
2	690419	52	20	30	26-37	zamak
2	700435	58	20	35	42	zamak

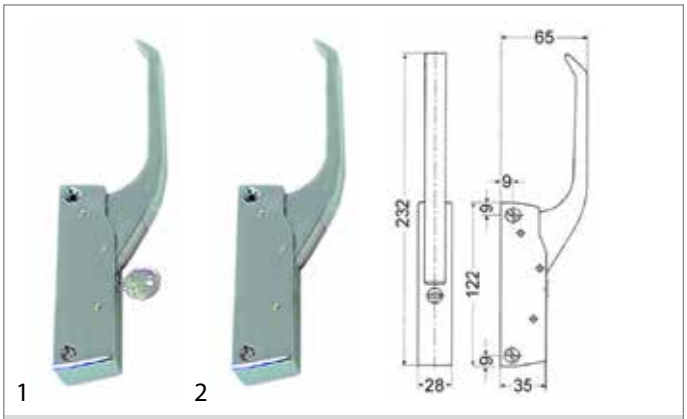

fig.	GEV No.	L (mm)	MD (mm)	version	type
1	690409	122	104	lockable	G 786 C
2	690408	122	104	non lockable	G 781 C

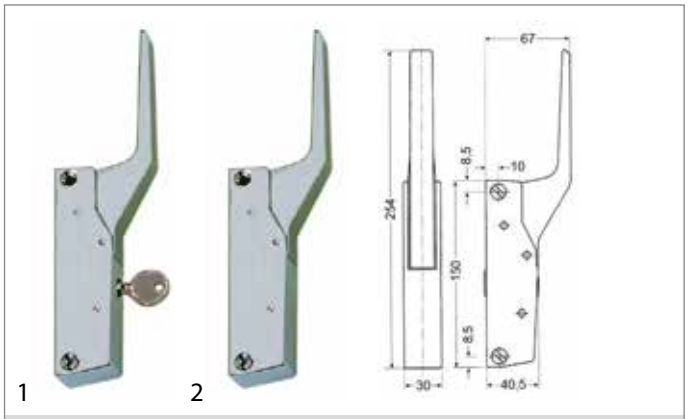

fig.	GEV No.	L (mm)	MD (mm)	version	type
1	690415	150	133	lockable	G 796 C
2	690414	150	133	non lockable	G 791

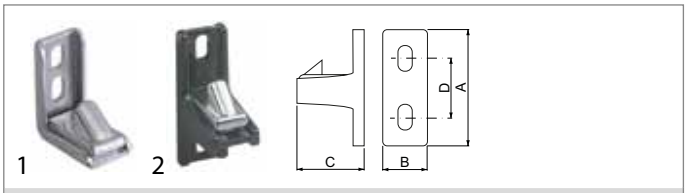

fig.	GEV No.	A (mm)	B (mm)	C (mm)	D (mm)	material
1	690418	36	19	29	12	zinc-coated steel
2	690419	52	20	30	26-37	zamak
2	700435	58	20	35	42	zamak

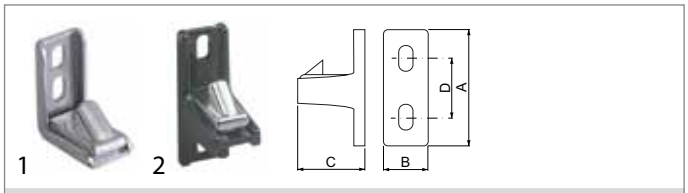

fig.	GEV No.	A (mm)	B (mm)	C (mm)	D (mm)	material
1	690418	36	19	29	12	zinc-coated steel
2	690419	52	20	30	26-37	zamak
2	700435	58	20	35	42	zamak

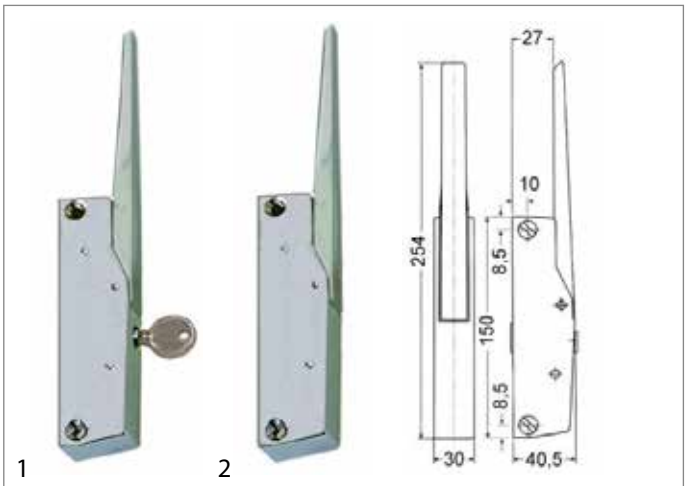

fig.	GEV No.	L (mm)	MD (mm)	version	type
1	690413	150	133	lockable	G 795
2	690412	150	133	non lockable	G 790

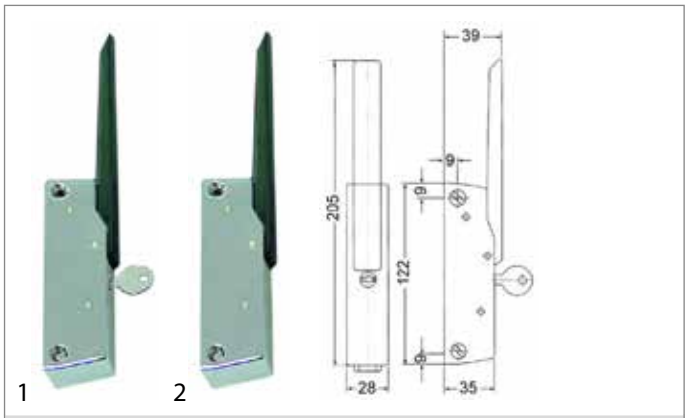

fig.	GEV No.	L (mm)	MD (mm)	version	type
1	690417	122	104	lockable	G 885 PVC
2	690416	122	104	non lockable	G 880 PVC

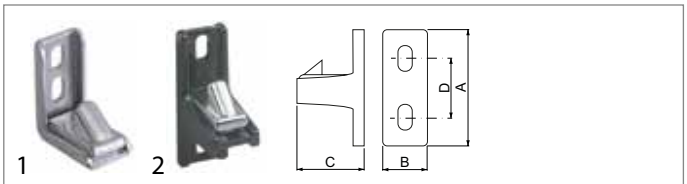

fig.	GEV No.	A (mm)	B (mm)	C (mm)	D (mm)	material
1	690418	36	19	29	12	zinc-coated steel
2	690419	52	20	30	26-37	zamak
2	700435	58	20	35	42	zamak

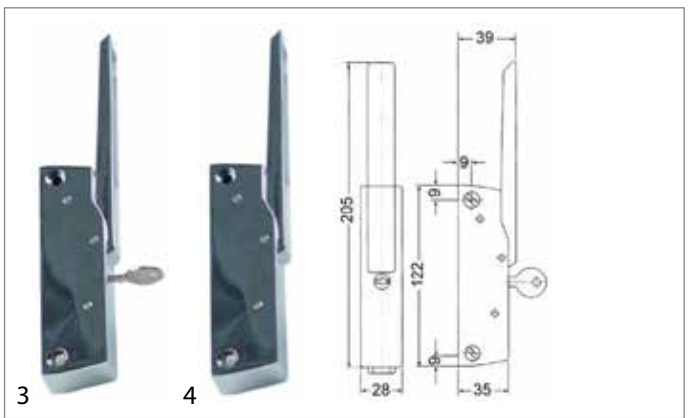

fig.	GEV No.	L (mm)	MD (mm)	version	type
3	700556	122	104	lockable	G 885
4	700557	122	104	non lockable	G 880

Find the complete and up-to-date range of products in our GEV Webshop

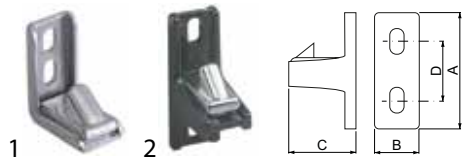

fig.	GEV No.	A (mm)	B (mm)	C (mm)	D (mm)	material
1	690418	36	19	29	12	zinc-coated steel
2	690419	52	20	30	26-37	zamak
2	700435	58	20	35	42	zamak

GERMANI

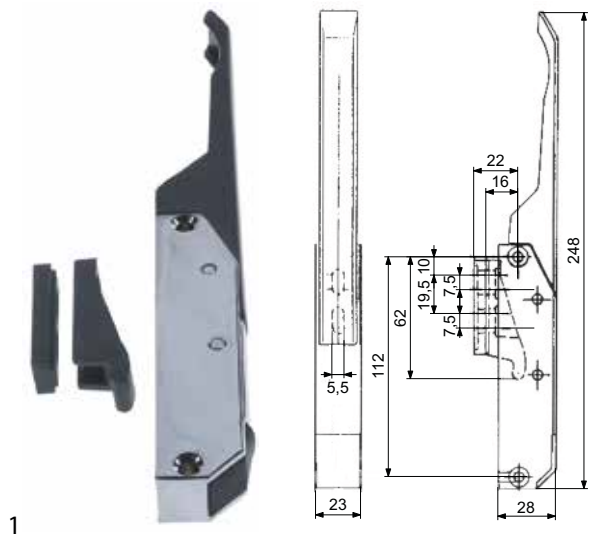

fig.	GEV No.	L (mm)	MD (mm)	version	type
1	694080	248	112	non lockable	5200

RAHRBACH

6188 series

fig.	GEV No.	L (mm)	MD (mm)	version	type
1	700081	185	150	non lockable	6188
2	700776[1]	185	150	non lockable	6188
3	700778[2]	185	150	non lockable	6188
4	700777[1]	185	150	lockable	6188

[1]with plastic cover and chrome-plated lever [2]with plastic cover and black painted lever

fig.	GEV No.	L (mm)	MD (mm)	version	type
5	700779[1]	185	150	lockable	6188

[1]with plastic cover and black painted lever

fig.	GEV No.	description
1	690110	base plate H 1mm L 38mm W 11mm mounting distance 26mm plastic
1	690111	base plate H 2mm L 38mm W 11mm mounting distance 26mm plastic
1	690947	base plate H 5mm L 38mm W 11mm mounting distance 26mm plastic
2	700082	door catch L 38mm W 18mm mounting distance 26mm cold/hot drinks

6201 series

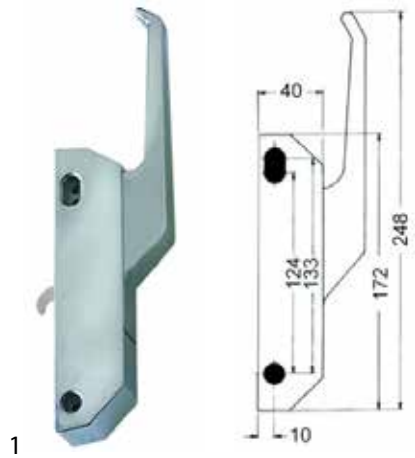

fig.	GEV No.	L (mm)	MD (mm)	version	type
1	690024	172	124/133	non lockable	6201

fig.	GEV No.	description
1	690123	door catch with roller

S&S

1647 series

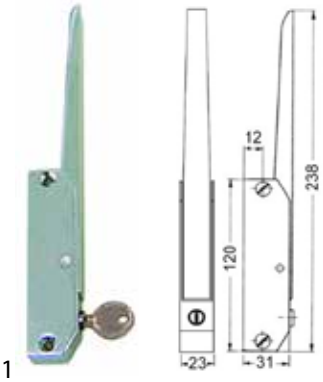

1

fig.	GEV No.	L (mm)	MD (mm)	version	type
1	690217	120	105	lockable	1647

1

fig.	GEV No.	description
1	690325	door catch with roller

2024/2025 series

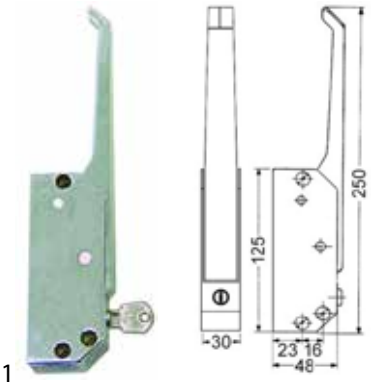

1

fig.	GEV No.	L (mm)	MD (mm)	version	type
1	690218	125	105/110	lockable	2024

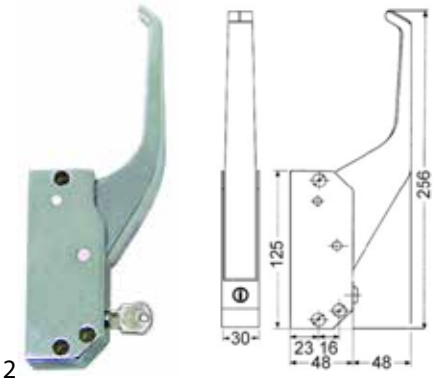

2

fig.	GEV No.	L (mm)	MD (mm)	version	type
2	690219	125	105/110	lockable	2025

1

fig.	GEV No.	description
1	690309	door catch with roller type 649

2074 series

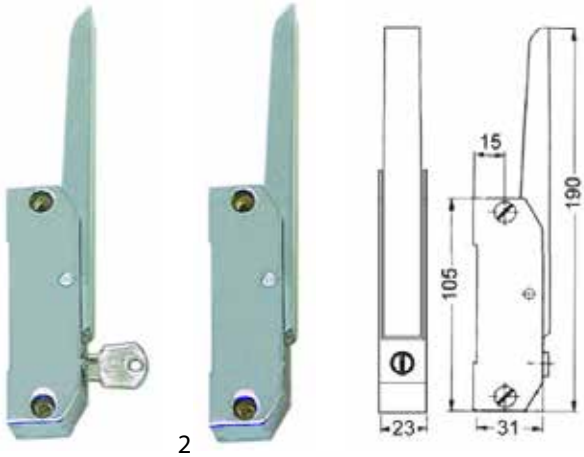

1 2

fig.	GEV No.	L (mm)	MD (mm)	version	type
1	690011	105	90	lockable	2074
2	690012	105	90	non lockable	2074

1 2

fig.	GEV No.	description
1	690013	door catch H 5mm with spigot
1	690014	door catch H 10mm hole distance 32mm with spigot hole ø 5,5mm spigot-ø 10mm
1	690015	door catch H 13mm with spigot
2	690307	door catch L 105mm W 23mm H 14mm mounting distance 90mm high

Find the complete and up-to-date range of products in our GEV Webshop

STUV

3.30.015x.x series

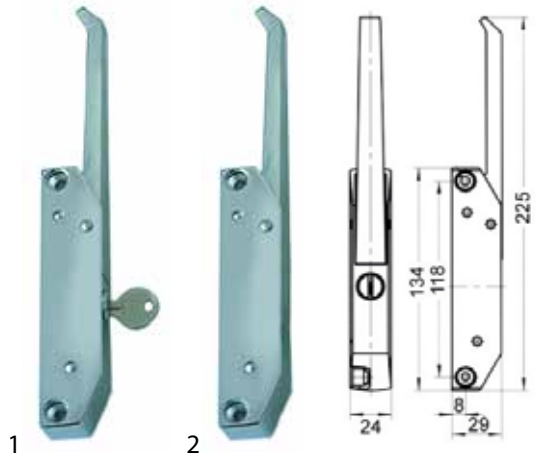

fig.	GEV No.	L (mm)	MD (mm)	version	type
1	700088	134	118	lockable	3.30.0155
2	690809	134	118	non lockable	3.30.0157.0

fig.	GEV No.	description
1	690121	door catch H 14mm L 61mm W 15,5mm zinc die cast refrigeration units

3.30.016x.x series

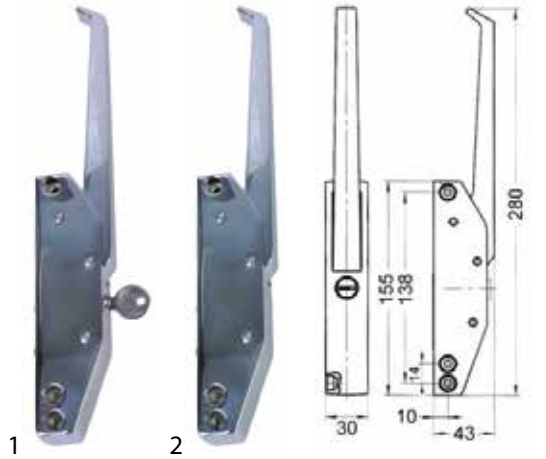

fig.	GEV No.	L (mm)	MD (mm)	version	type
1	690122	155	124/138	lockable	3.30.0160
2	700373	155	124/138	non lockable	3.30.0163

fig.	GEV No.	description
1	700064	door catch H 40mm L 28mm W 22mm

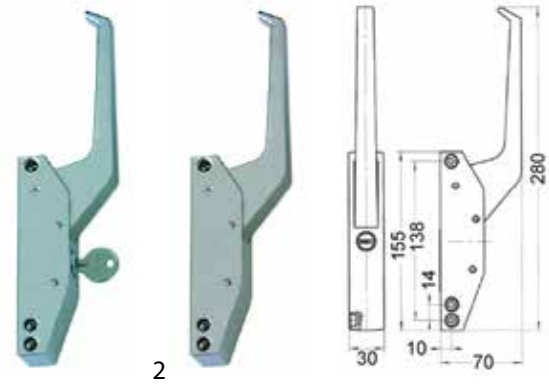

fig.	GEV No.	L (mm)	MD (mm)	version	type
1	700392	155	124/138	lockable	3.30.0162
2	700063	155	124/138	non lockable	3.30.0164

fig.	GEV No.	description
1	700064	door catch H 40mm L 28mm W 22mm

3.30.05xx.x series

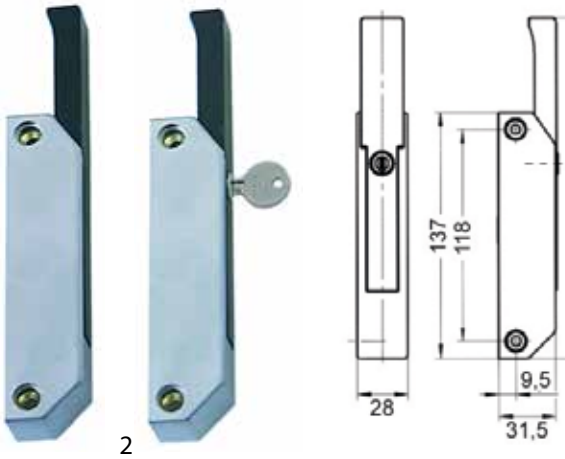

fig.	GEV No.	L (mm)	MD (mm)	version	type
1	690124	137	118	non lockable	3.30.0501
2	700077	137	118	lockable	3.30.0500

fig.	GEV No.	description
1	700078	door catch H 20mm L 47mm W 14mm mounting distance 27mm zinc die cast

magnetic locks

CHG

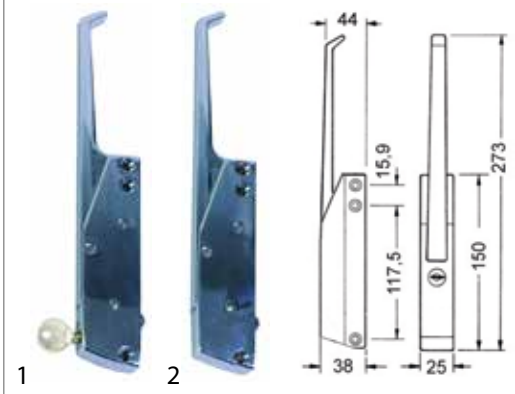

fig.	GEV No.	L (mm)	MD (mm)	version	type
1	690207	150	117/132	lockable	R24
2	690206	150	117/132	non lockable	R24

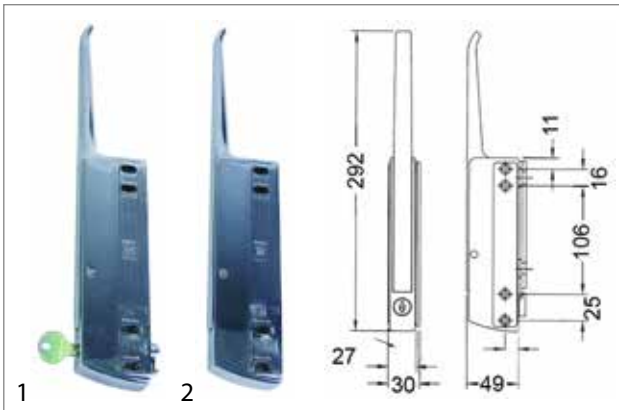

fig.	GEV No.	L (mm)	MD (mm)	version	type
1	690209	168	105/147	lockable	R25
2	690208	168	105/147	non lockable	R25

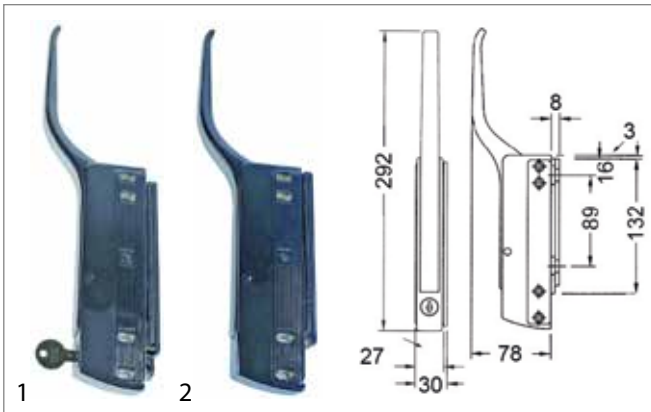

fig.	GEV No.	MD (mm)	version	type
1	700727	105/147	lockable	R25
2	700726	105/147	non lockable	R25

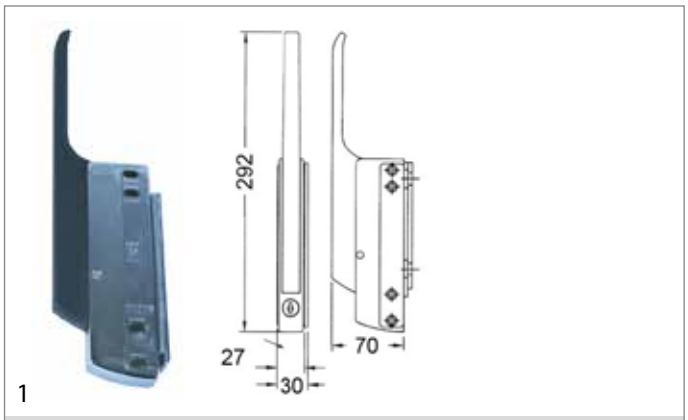

fig.	GEV No.	MD (mm)	version	type
1	700728	105/147	non lockable	R25

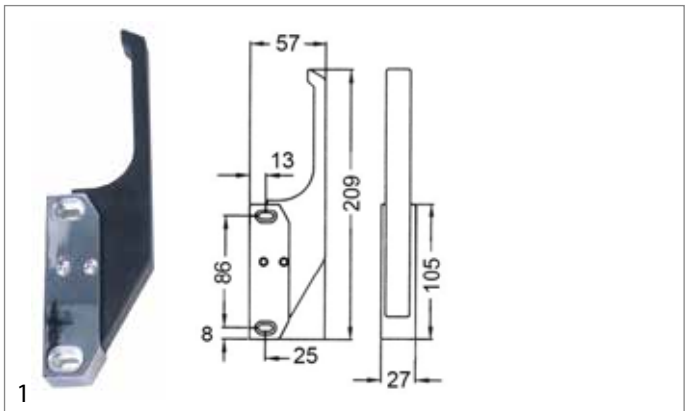

fig.	GEV No.	L (mm)	MD (mm)	application	type
1	690213	105	86	refrigeration units	R27

RAHRBACH

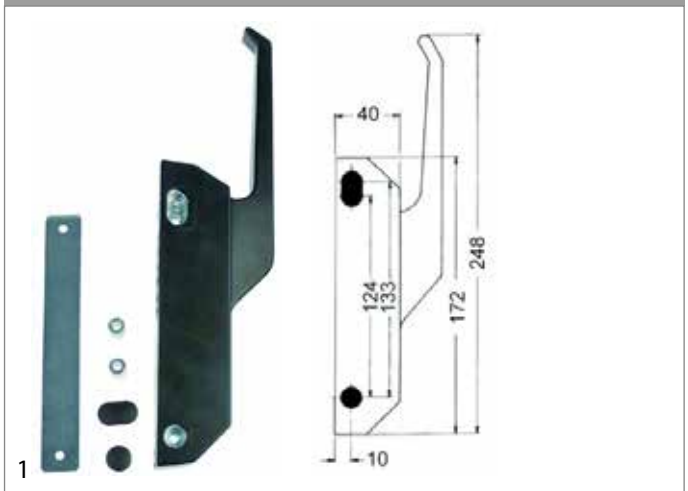

fig.	GEV No.	L (mm)	MD (mm)	type
1	690438	172	123/133	6202

Find the complete and up-to-date range of products in our GEV Webshop

drawer latches

RAHRBACH

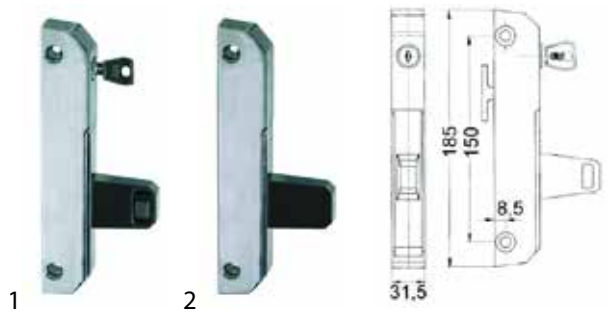

fig.	GEV No.	L (mm)	MD (mm)	version	type
1	690020	185	150	lockable	6190
2	690019	185	150	non lockable	6190

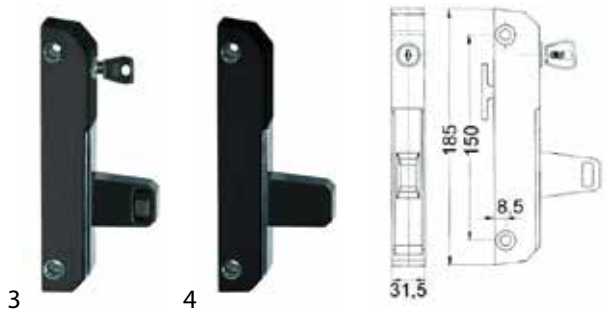

fig.	GEV No.	L (mm)	MD (mm)	version	type
3	700780	185	150	lockable	6190
3	700782	185	150	lockable	6190
4	700781	185	150	non lockable	6190
4	700783	185	150	non lockable	6190

fig.	GEV No.	description
1	690200	console metal
2	700082	door catch L 38mm W 18mm mounting distance 26mm cold/hot drinks

fig.	GEV No.	description
3	690021	handle rod L 1000mm

fig.	GEV No.	description
4	690110	base plate H 1mm L 38mm W 11mm mounting distance 26mm plastic
4	690111	base plate H 2mm L 38mm W 11mm mounting distance 26mm plastic
4	690947	base plate H 5mm L 38mm W 11mm mounting distance 26mm plastic

fig.	GEV No.	L (mm)	MD (mm)	version	type
1	690396	185	150	lockable	6190
2	690397	185	150	non lockable	6190

fig.	GEV No.	description
1	700082	door catch L 38mm W 18mm mounting distance 26mm cold/hot drinks

fig.	GEV No.	description
2	690398	handle rod L 1000mm circular pipe ø 20mm

fig.	GEV No.	description
3	690110	base plate H 1mm L 38mm W 11mm mounting distance 26mm plastic
3	690111	base plate H 2mm L 38mm W 11mm mounting distance 26mm plastic
3	690947	base plate H 5mm L 38mm W 11mm mounting distance 26mm plastic
4	690105	console H 42mm plastic circular pipe ø 16mm

STUV

3.30.05xx.x series

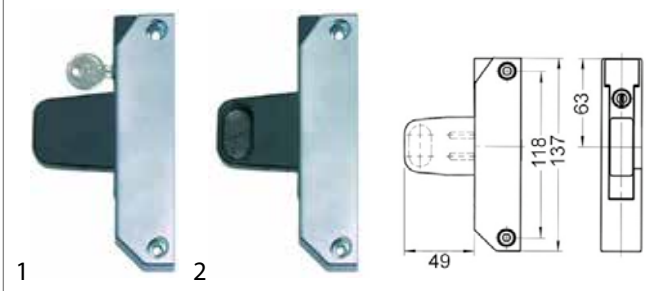

fig.	GEV No.	L (mm)	MD (mm)	version	type
1	690222	137	118	lockable	3.30.0518
2	690223	137	118	non lockable	3.30.0519

1

fig.	GEV No.	description	L (mm)	material
1	690005	handle rod	480	aluminium
1	690006	handle rod	560	aluminium
1	690007	handle rod	580	aluminium
1	690008	handle rod	630	aluminium
1	690009	handle rod	1000	aluminium

1

fig.	GEV No.	description	L (mm)	W (mm)	H (mm)	MD (mm)
1	700078	door catch	47	14	20	27

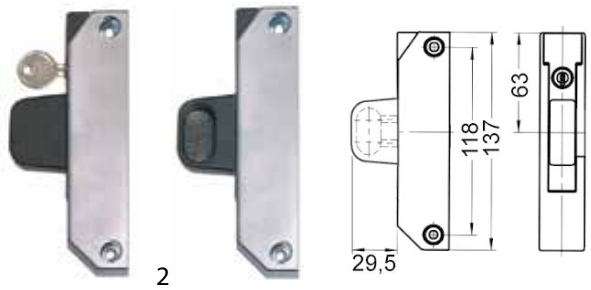

1 2

fig.	GEV No.	L (mm)	MD (mm)	version	type
1	690220	137	118	lockable	3.30.0513
2	690221	137	118	non lockable	3.30.0514

1

fig.	GEV No.	description	L (mm)	material
1	690005	handle rod	480	aluminium
1	690006	handle rod	560	aluminium
1	690007	handle rod	580	aluminium
1	690008	handle rod	630	aluminium
1	690009	handle rod	1000	aluminium

1

fig.	GEV No.	description	L (mm)	W (mm)	H (mm)	MD (mm)
1	700078	door catch	47	14	20	27

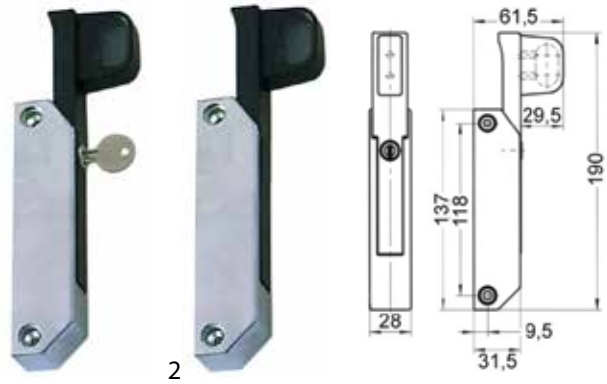

1 2

fig.	GEV No.	L (mm)	MD (mm)	version	type
1	700036	137	118	lockable	3.30.0510
2	700037	137	118	non lockable	3.30.0511

1

fig.	GEV No.	description	L (mm)	material
1	690005	handle rod	480	aluminium
1	690006	handle rod	560	aluminium
1	690007	handle rod	580	aluminium
1	690008	handle rod	630	aluminium
1	690009	handle rod	1000	aluminium

1

fig.	GEV No.	description	L (mm)	W (mm)	H (mm)	MD (mm)
1	700078	door catch	47	14	20	27

1 2

fig.	GEV No.	L (mm)	MD (mm)	version	type
1	700038	137	118	lockable	3.30.0515
2	700039	137	118	non lockable	3.30.0516

Find the complete and up-to-date range of products in our GEV Webshop

1

fig.	GEV No.	description	L (mm)	material
1	690005	handle rod	480	aluminium
1	690006	handle rod	560	aluminium
1	690007	handle rod	580	aluminium
1	690008	handle rod	630	aluminium
1	690009	handle rod	1000	aluminium

1

fig.	GEV No.	description	L (mm)	W (mm)	H (mm)	MD (mm)
1	700078	door catch	47	14	20	27

S&S

1

2

3

fig.	GEV No.	L (mm)	MD (mm)	version	type
1	690225	105	90	lockable	2087
2	690224	105	90	non lockable	2087
3	690226	105	90	non lockable	2087

1

fig.	GEV No.	description	L (mm)	material
1	690005	handle rod	480	aluminium
1	690006	handle rod	560	aluminium
1	690007	handle rod	580	aluminium
1	690008	handle rod	630	aluminium
1	690009	handle rod	1000	aluminium

1

fig.	GEV No.	description	L (mm)	W (mm)	H (mm)	MD (mm)
1	690307	door catch	105	23	14	90

producer-specific

HAGOLA

1

2

fig.	GEV No.	L (mm)	MD (mm)	version	type
1	700788	185	150	lockable	HAGOLA
2	700789	185	150	non lockable	HAGOLA

1

2

fig.	GEV No.	description
1	690110	base plate H 1mm L 38mm W 11mm mounting distance 26mm plastic
1	690111	base plate H 2mm L 38mm W 11mm mounting distance 26mm plastic
1	690947	base plate H 5mm L 38mm W 11mm mounting distance 26mm plastic
2	700082	door catch L 38mm W 18mm mounting distance 26mm cold/hot drinks

3

fig.	GEV No.	description
3	700790	handle rod L 515mm aluminium half-round
3	700856	handle rod L 825mm aluminium half-round

walk-in fridge catches

STUV

3.31.047x.x series

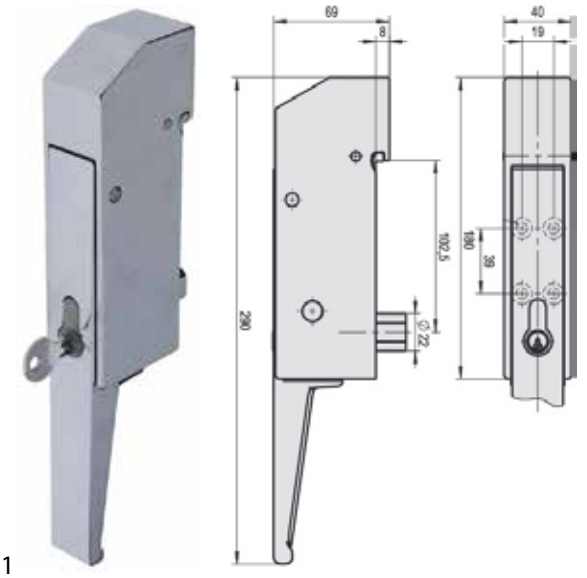

1

fig.	GEV No.	door thickness (mm)	no.
1	690125	70-160	3.31.0540.0

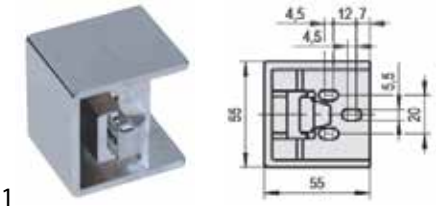

1

fig.	GEV No.	description	thickness (mm)	no.
1	690138	door catch	28-32	3.31.0543.0

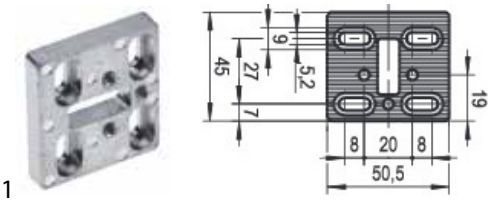

1

fig.	GEV No.	description	thickness (mm)	no.
1	690139	mounting plate	8.5	3.31.0450.0

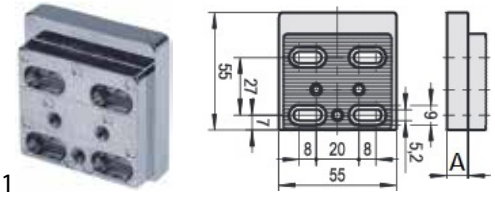

1

fig.	GEV No.	description	A (mm)	no.
1	690140	base plate	10	3.31.0544.0
1	690141	base plate	20	3.31.0545.0
1	690143	base plate	40	3.31.0547.0
1	690144	base plate	50	3.31.0548.0

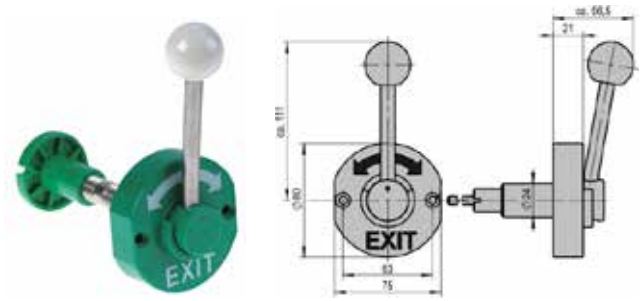

1

fig.	GEV No.	description	door thickness (mm)	no.
1	690126	internal opener	70-80	3.31.0470.0
1	690127	internal opener	81-100	3.31.0471.0
1	690128	internal opener	101-120	3.31.0472.0
1	690129	internal opener	121-140	3.31.0473.0
1	690145	internal opener	141-160	3.31.0474.0

3.31.270x.x series

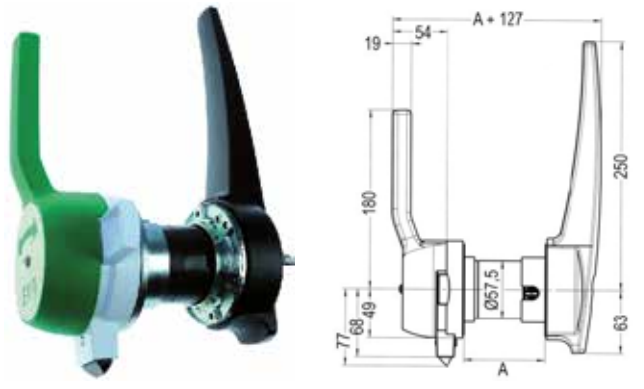

1

fig.	GEV No.	description	A (mm)	hinging	no.
1	691750	walk-in fridge catch	80	left	3.31.2700.2
1	691749	walk-in fridge catch	80	right	3.31.2700.1
1	691752	walk-in fridge catch	90	left	3.31.2702.2
1	691751	walk-in fridge catch	90	right	3.31.2702.1
1	691754	walk-in fridge catch	100	left	3.31.2704.2
1	691753	walk-in fridge catch	100	right	3.31.2704.1
1	691756	walk-in fridge catch	120	left	3.31.2706.2
1	691755	walk-in fridge catch	120	right	3.31.2706.1
1	691758	walk-in fridge catch	125	left	3.31.2707.2
1	691757	walk-in fridge catch	125	right	3.31.2707.1
1	691760	walk-in fridge catch	140	left	3.31.2708.2
1	691759	walk-in fridge catch	140	right	3.31.2708.1

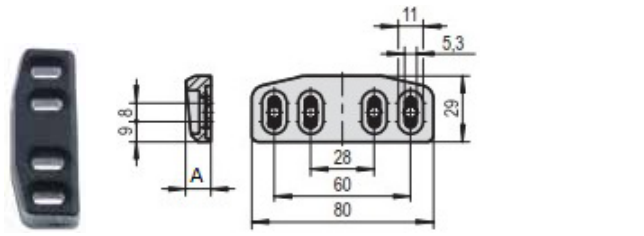

1

fig.	GEV No.	description	A (mm)	no.
1	691765	door catch	11	3.31.0768.0
1	691766	door catch	18	3.31.0766.0

Find the complete and up-to-date range of products in our GEV Webshop

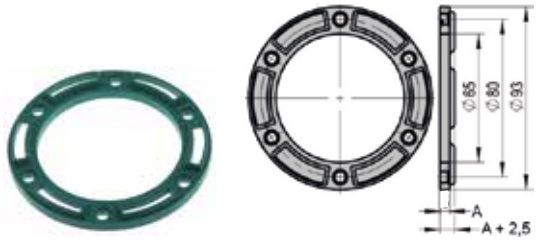

1

fig.	GEV No.	description	A (mm)	MD (mm)	no.
1	691762	base plate	5	80	3.31.2795.0
1	691763	base plate	10	80	3.31.2796.0

3.31.20xx.x series

1

technical data:
hinging left/right

fig.	GEV No.	description	A (mm)	no.
1	691667	walk-in fridge catch	56-60	3.31.2001.1
1	691668	walk-in fridge catch	76-80	3.31.2000.1
1	691669	walk-in fridge catch	86-90	3.31.2006.1
1	691670	walk-in fridge catch	96-100	3.31.2010.1
1	691671	walk-in fridge catch	106-110	3.31.2004.1
1	691672	walk-in fridge catch	116-120	3.31.2011.1
1	691739	walk-in fridge catch	136-140	3.31.2012.1
1	691740	walk-in fridge catch	156-160	3.31.2016.1

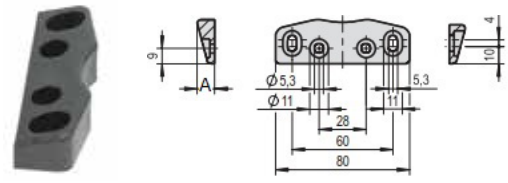

1

fig.	GEV No.	description	A (mm)	W (mm)	no.
1	690164	door catch	11	18	3.31.0760.0
1	690165	door catch	18	18	3.31.0765.0

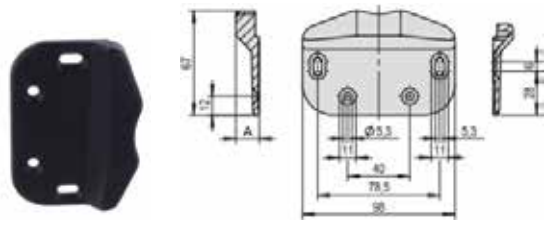

2

fig.	GEV No.	description	A (mm)	W (mm)	no.
2	691741	door catch	15	98	3.31.0762.0

3.31.23xx.x series

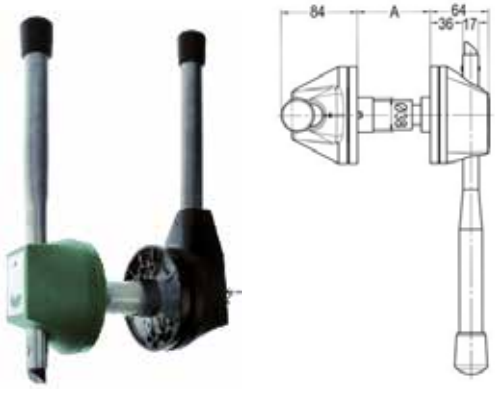

1

fig.	GEV No.	description	A (mm)	no.
1	691743	walk-in fridge catch	56-60	3.31.2301.1
1	691744	walk-in fridge catch	76-80	3.31.2300.1
1	691745	walk-in fridge catch	96-100	3.31.2310.1
1	691746	walk-in fridge catch	116-120	3.31.2311.1
1	691747	walk-in fridge catch	136-140	3.31.2312.1

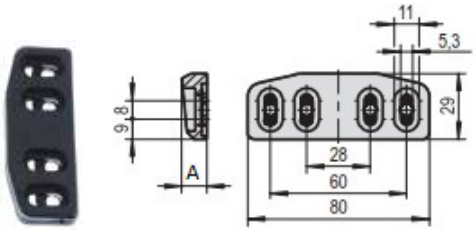

1

fig.	GEV No.	description	A (mm)	no.
1	691748	door catch	11	3.31.0769.0

3.31.065x.x series

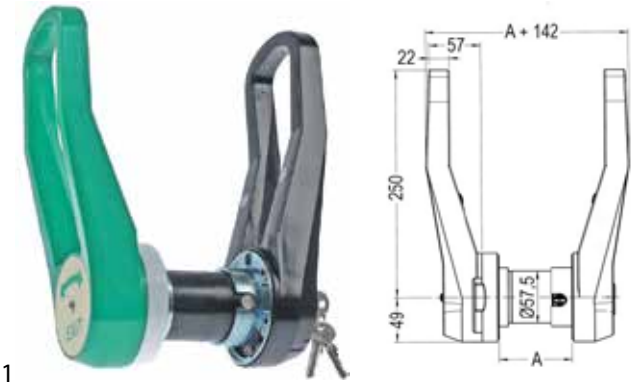

1

fig.	GEV No.	description	A (mm)	hinging	no.
1	690001	walk-in fridge catch	80	left	3.31.0650.2
1	690002	walk-in fridge catch	80	right	3.31.0650.1
1	691947	walk-in fridge catch	90	left	3.31.0653.2
1	691948	walk-in fridge catch	90	right	3.31.0653.1
1	690327	walk-in fridge catch	100	left	3.31.0654.2
1	690326	walk-in fridge catch	100	right	3.31.0654.1
1	690162	walk-in fridge catch	120	left	3.31.0655.2
1	690160	walk-in fridge catch	120	right	3.31.0655.1
1	691949	walk-in fridge catch	125	left	3.31.0658.2
1	691950	walk-in fridge catch	125	right	3.31.0658.1
1	690163	walk-in fridge catch	140	left	3.31.0659.2
1	690161	walk-in fridge catch	140	right	3.31.0659.1

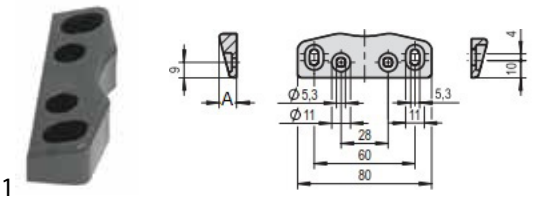

1

fig.	GEV No.	description	A (mm)	W (mm)	MD (mm)	no.
1	690164	door catch	11	18	28/60	3.31.0760.0
1	690165	door catch	18	18	28/60	3.31.0765.0

1

fig.	GEV No.	description
1	694485	sign for walk-in cold room catch Exit ø 78mm

RAHRBACH

6000 series

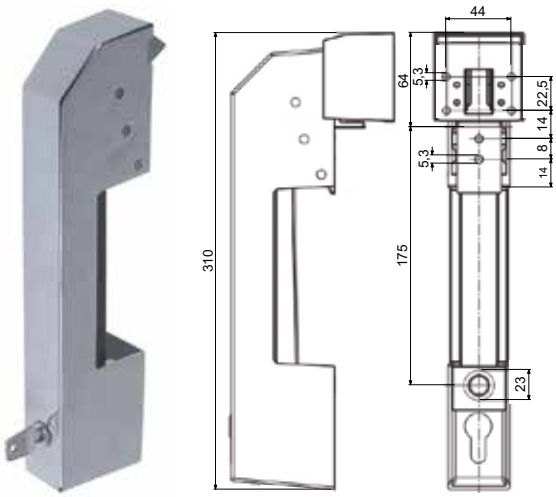

1

fig.	GEV No.	description	application	no.
1	690050	walk-in fridge catch	external lock	6000-020893

1

fig.	GEV No.	description	for off-set (mm)	no.
1	690051	door catch	26-35	6000-020902
1	690060	door catch	30-43	6000-020714

1 2

fig.	GEV No.	description	for off-set (mm)	no.
1	690054	counter support	0	6000-020678
2	690056	counter support	13	6000-020699
2	690057	counter support	16	6000-020700
2	690058	counter support	19	6000-020701

1 2 3 4

fig.	GEV No.	description	L (mm)	W (mm)	thickness (mm)	no.
1	690053	base plate	48	40	6	6000-020905
2	690061	base plate	53	56	0	6000-020715
2	690062	base plate	59	61	22	6000-020716
2	690063	base plate	59	61	42	6000-020717
2	690065	base plate	59	61	62	6000-020718
3	690064	base plate	59	61	7.5	6000-020719
4	690052	base plate	84	40	6	6000-020906

Find the complete and up-to-date range of products in our GEV Webshop

fig.	GEV No.	description
1	700722	key cylinder shaft ø 12mm W 15,75mm L 27mm H 25mm ED ø 15,8mm no. 6000-021001 thickness 2,5mm
2	690238	spring for trap L 40mm ø 14mm wire gauge ø 2mm

fig.	GEV No.	description	for door thickness (mm)	no.
1	694025	door opener	40-56	6000-020530
1	690066	door opener	60-76	6000-020531
1	690067	door opener	76-92	6000-020532
1	690068	door opener	92-108	6000-020533
1	690069	door opener	108-124	6000-020534
1	690070	door opener	124-140	6000-020535
1	690071	door opener	140-156	6000-020536
1	690072	door opener	156-172	6000-020537

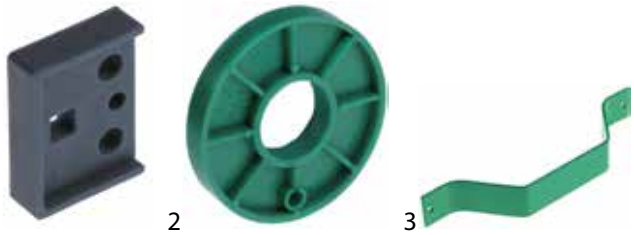

fig.	GEV No.	description
1	694064	base plate for safety bar mounting distance 20mm W 40mm L 30mm H 10mm thickness 6mm type 6000/6004
2	690073	base plate refrigeration W ø 59mm H 5mm ED ø 59mm type 6000/6004 thickness 5mm green no. 6000-020615
3	694063	safety bar mounting distance 241mm W 35mm L 257mm H 54mm type 6000/6004 no. 6000-020003

6004 series

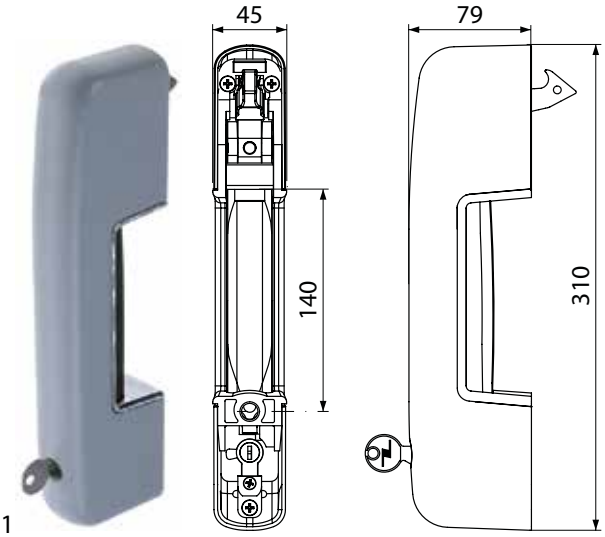

fig.	GEV No.	description	colour	no.
1	694026	walk-in fridge catch	grey/black	6004-021010
1	694027	walk-in fridge catch	grey/chrome	6004-021011

fig.	GEV No.	description	for off-set (mm)	no.
1	694794	door catch	0	6004-020050
1	694043	door catch	32.5-48.5	6004-020110
1	694044	door catch	43.5-56.5	6004-020111
1	694045	door catch	52.5-68.5	6004-020112
1	694046	door catch	60.5-76.5	6004-020113
1	694047	door catch	72.5-88.5	6004-020114
1	694813	door catch	72.5-88.5	6004-020124
1	694048	door catch	80.5-96.5	6004-020115
1	694049	door catch	97.5-108.5	6004-020116
1	694050	door catch	105.5-116.5	6004-020117

fig.	GEV No.	description	for off-set (mm)	no.
1	690054	counter support	0	6000-020678
2	690056	counter support	13	6000-020699
2	690057	counter support	16	6000-020700
2	690058	counter support	19	6000-020701

fig.	GEV No.	description	L (mm)	W (mm)	thickness (mm)	no.
1	690053	base plate	48	40	6	6000-020905
2	690064	base plate	59	61	7.5	6000-020719
3	690052	base plate	84	40	6	6000-020906

fig.	GEV No.	description
1	700722	key cylinder shaft ø 12mm W 15,75mm L 27mm H 25mm ED ø 15,8mm no. 6000-021001 thickness 2,5mm
2	690238	spring for trap L 40mm ø 14mm wire gauge ø 2mm

fig.	GEV No.	description	for door thickness (mm)	no.
1	694025	door opener	40-56	6000-020530
1	690066	door opener	60-76	6000-020531
1	690067	door opener	76-92	6000-020532
1	690068	door opener	92-108	6000-020533
1	690069	door opener	108-124	6000-020534
1	690070	door opener	124-140	6000-020535
1	690071	door opener	140-156	6000-020536
1	690072	door opener	156-172	6000-020537

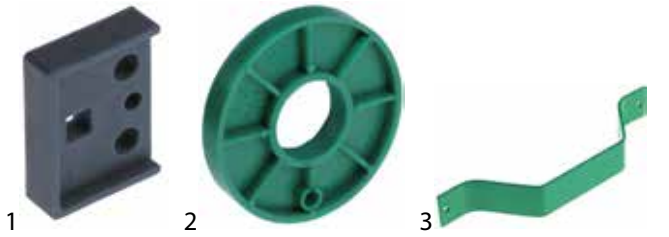

fig.	GEV No.	description
1	694064	base plate for safety bar mounting distance 20mm W 40mm L 30mm H 10mm thickness 6mm type 6000/6004
2	690073	base plate refrigeration W ø 59mm H 5mm ED ø 59mm type 6000/6004 thickness 5mm green no. 6000-020615
3	694063	safety bar mounting distance 241mm W 35mm L 257mm H 54mm type 6000/6004 no. 6000-020003

7101 series

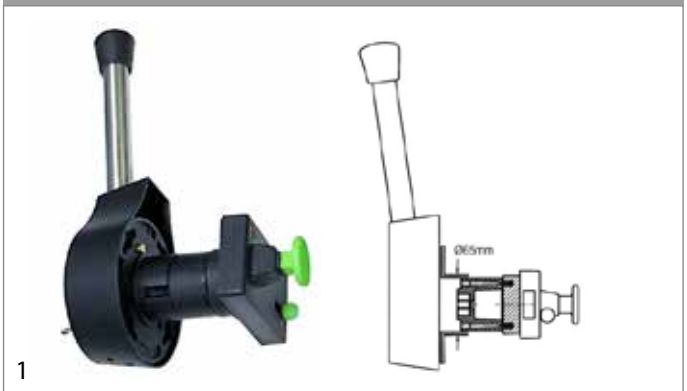

fig.	GEV No.	description	door thickness (mm)	hinging	type
1	690176	walk-in fridge catch	80	left	7101
1	690174	walk-in fridge catch	80	right	7101
1	690177	walk-in fridge catch	125	left	7101
1	690175	walk-in fridge catch	125	right	7101

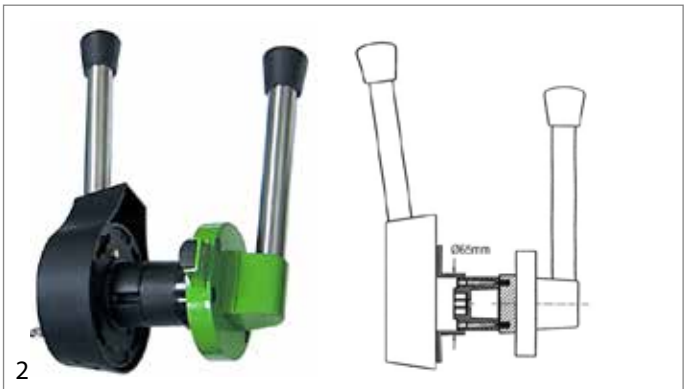

fig.	GEV No.	description	door thickness (mm)	hinging	type
2	690172	walk-in fridge catch	80	left	7101
2	690170	walk-in fridge catch	80	right	7101
2	690173	walk-in fridge catch	115	left	7101
2	690171	walk-in fridge catch	115	right	7101

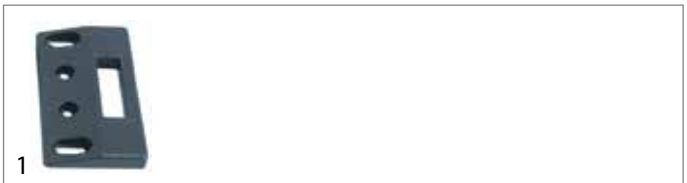

fig.	GEV No.	description	MD (mm)	W (mm)	L (mm)	H (mm)	type
1	690191	door catch	28/80	55	100	10	7101

Find the complete and up-to-date range of products in our GEV Webshop

7501 VITRO series

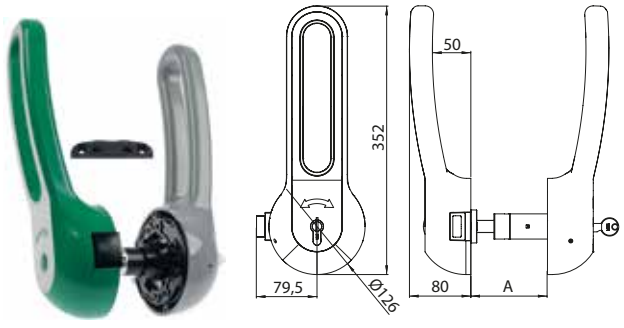

1

technical data:
hinging right/left

fig.	GEV No.	A (mm)	version	type
1	692626	80	with latch	7501
1	692629	80	with press lever	7501
1	692627	100	with latch	7501
1	692630	100	with press lever	7501
1	692628	120	with latch	7501
1	692631	120	with press lever	7501

1

technical data:
mounting distance 65mm
width 25mm
length 90mm
height 3mm

fig.	GEV No.	description	type
1	692632	base plate	7500

7503 NITRO series

1

technical data:
hinging right/left

fig.	GEV No.	A (mm)	version	type
1	692620	80	with latch	7503
1	692623	80	with press lever	7503
1	692621	100	with latch	7503
1	692624	100	with press lever	7503
1	692622	120	with latch	7503
1	692625	120	with press lever	7503

1

technical data:
mounting distance 65mm
width 25mm
length 90mm
height 3mm

fig.	GEV No.	description
1	692632	base plate

7800 ARCTO series

1

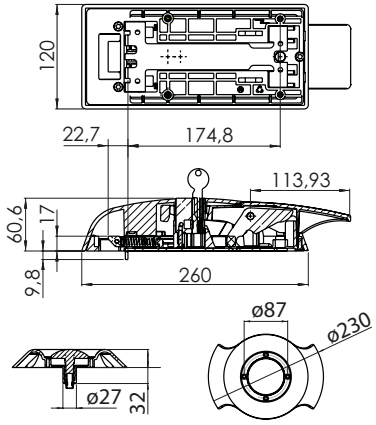

technical data:
version external lock
hinging right/left

fig.	GEV No.	description	scope of delivery
1	692633	walk-in fridge catch	without door thickness set

1

fig.	GEV No.	description	door thickness (mm)	type
1	692634	plunger	80	7800
1	692635	plunger	100	7800
1	692636	plunger	120	7800

1

fig.	GEV No.	description	L (mm)	H (mm)	W (mm)	type
1	692637	base plate	127.5	10	46	7800

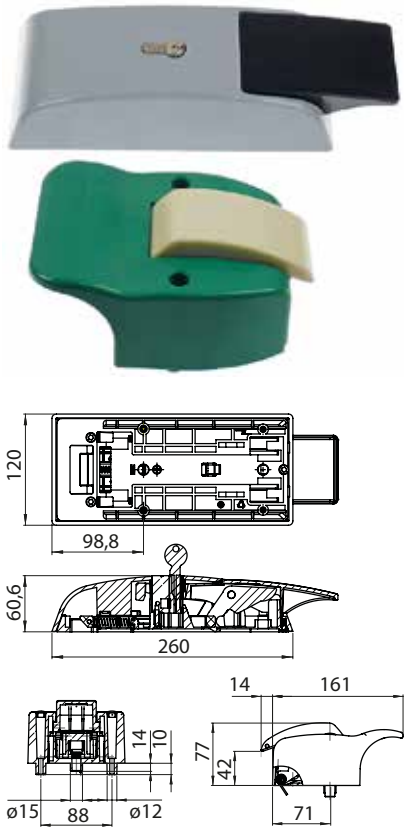

technical data:
version internal lock
hinging right/left

fig.	GEV No.	description	scope of delivery
1	692638	walk-in fridge catch	without door thickness set

fig.	GEV No.	description	door thickness (mm)	type
1	692639	door thickness set	80	7800
1	692640	door thickness set	100	7800
1	692641	door thickness set	120	7800

CAFF/FERMOD

G-2xx

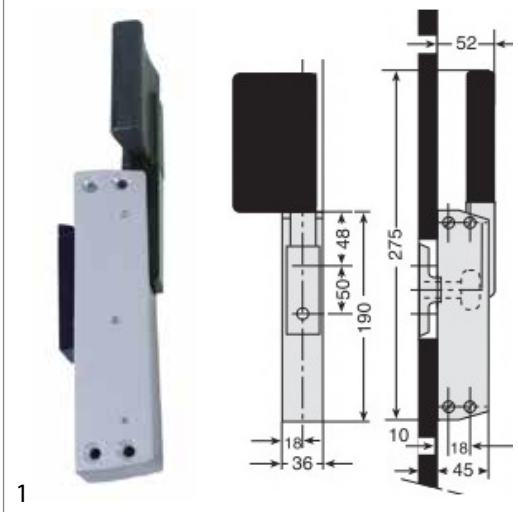

fig.	GEV No.	description	type
1	700617	walk-in fridge catch	G-202

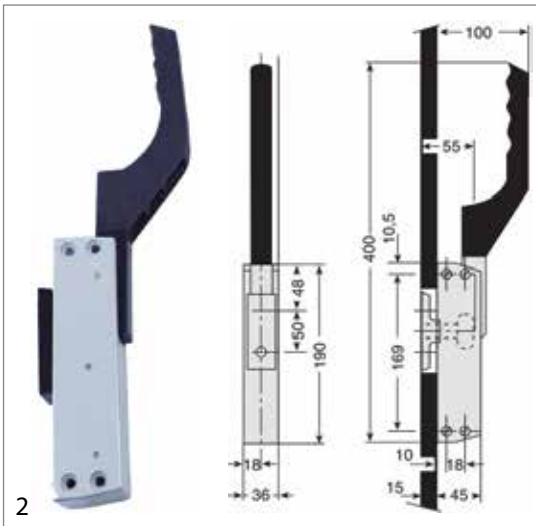

fig.	GEV No.	description	type
2	700570	walk-in fridge catch	DX-SX 1225

fig.	GEV No.	description
1	692536	door catch for walk-in cold room catch type 1225E-NR

Find the complete and up-to-date range of products in our GEV Webshop

1925/1926 series

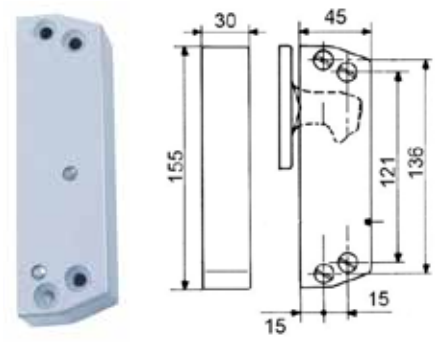

1

fig.	GEV No.	description
1	700571	latch without handle without door catch 1925/1926

1

fig.	GEV No.	description
1	700572	door catch for 700571

430/431 series

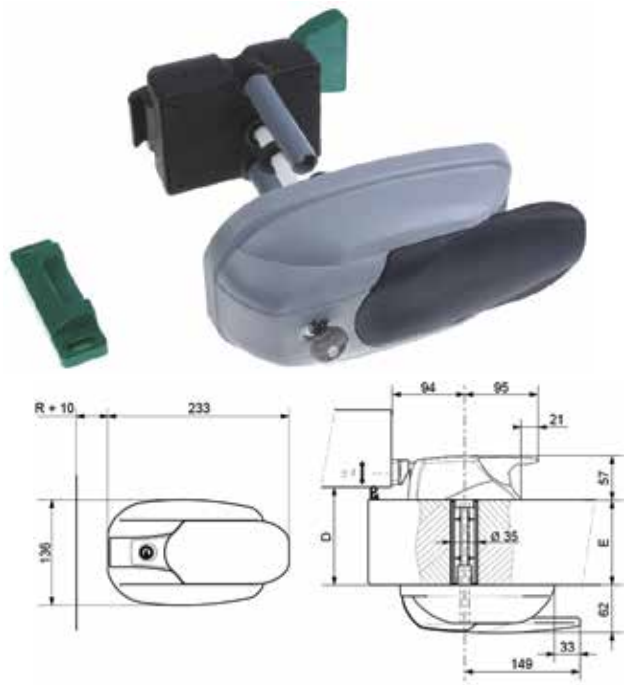

1

fig.	GEV No.	E (mm)	version	type
1	700616	40-165	lockable	431

2

fig.	GEV No.	E (mm)	version	type
2	700615	40-165	non lockable	430

1

fig.	GEV No.	description	W (mm)	L (mm)	H (mm)
1	701471	door opener	112	146.5	65

1

fig.	GEV No.	description	W (mm)	L (mm)	H (mm)
1	701470	door catch	32	120	23

1

fig.	GEV No.	description	door thickness (mm)
1	701469	door thickness set	60
1	701468	door thickness set	115
1	701467	door thickness set	165

520/521 series

1

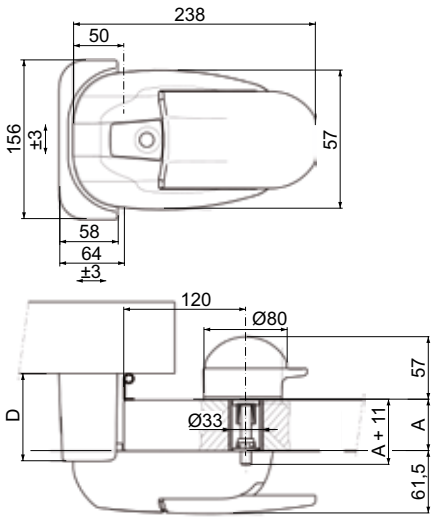

fig.	GEV No.	A (mm)	version	type
1	701438	27-213	lockable	521

1

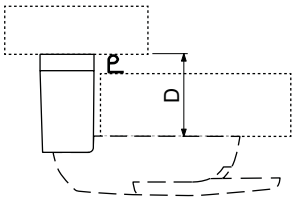

fig.	GEV No.	description	D (mm)	type
1	701472	door catch	27/43	520/521
1	701473	door catch	44/60	520/521
1	701474	door catch	61/77	520/521
1	701475	door catch	78/94	520/521
1	701476	door catch	95/111	520/521

1 2 3

fig.	GEV No.	description
1	701477	base plate W 58mm L 156mm H 17mm type 520/521
2	700618	door opener type 520/521/620/621/920/921 for door thickness 30-120mm
3	701418	lid green for door opener

620/621 series

1

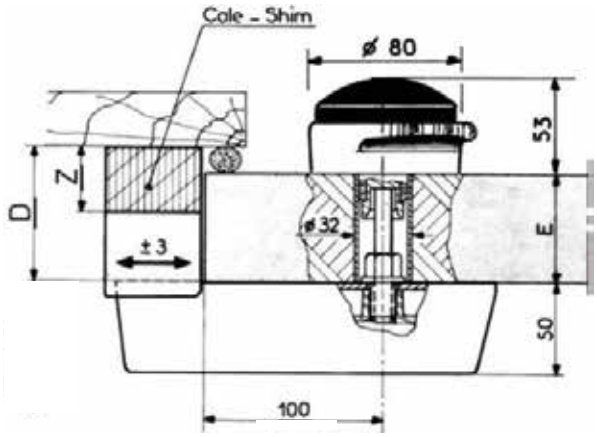

fig.	GEV No.	description	E (mm)	version	type
1	700784	walk-in fridge catch	30-120	lockable	621

Find the complete and up-to-date range of products in our GEV Webshop

2

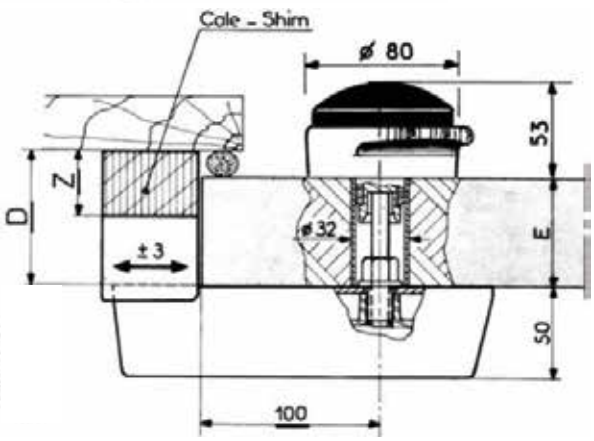

fig.	GEV No.	description	E (mm)	version	type
2	700576	walk-in fridge catch	30-120	non lockable	620
2	700785	walk-in fridge catch	30-200	non lockable	620

1

fig.	GEV No.	description	D (mm)
1	700619	door catch	27-42

1

fig.	GEV No.	description	Z (mm)	type
1	700795	base plate	15	620/621
1	700796	base plate	30	620/621
1	700797	base plate	50	620/621
1	700798	base plate	80	620/621

1 2

fig.	GEV No.	description
1	700618	door opener type 520/521/620/621/920/921 for door thickness 30-120mm
2	701418	lid green for door opener

920/921 series

1

fig.	GEV No.	description	E (mm)	type
1	700573	walk-in fridge catch	100	920HP

2

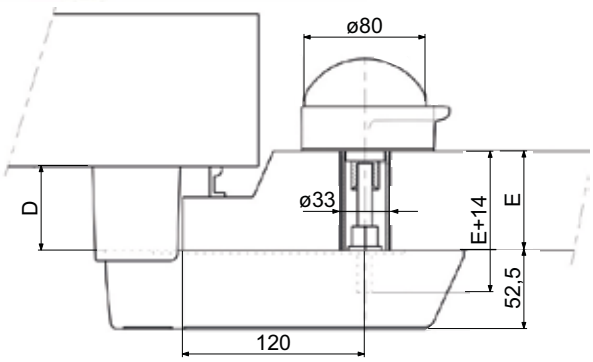

fig.	GEV No.	description	E (mm)	type
2	700574	walk-in fridge catch	100	921HP

1

fig.	GEV No.	description	D (mm)
1	700577	door catch	27-42
1	700578	door catch	42-57
1	700579	door catch	52-72
1	701043	door catch	69-89
1	700791	door catch	86-106
1	700792	door catch	103-123
1	700793	door catch	120-140
1	700794	door catch	137-157

1 2 3

fig.	GEV No.	description
1	700618	door opener type 520/521/620/621/920/921 for door thickness 30-120mm
2	692532	key cylinder with key rotation angle 90°
3	701418	lid green for door opener

1216 series

1

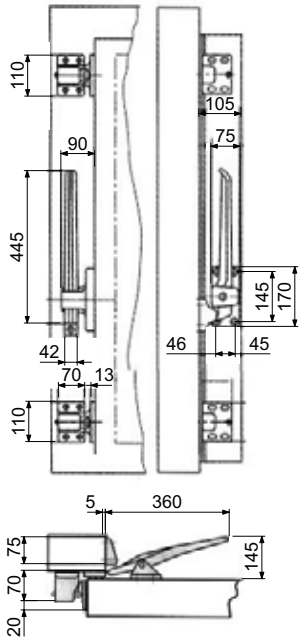

fig.	GEV No.	description	hinging	type
1	700599	walk-in fridge catch	left	1216
1	700598	walk-in fridge catch	right	1216

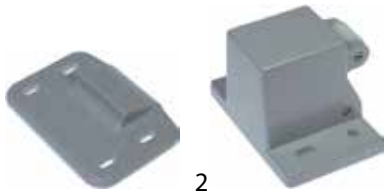

1 2

fig.	GEV No.	description
1	700596	door catch H 22mm L 115mm W 84mm mounting distance 85mm suitable for catch
2	700597	snap lock H 70mm L 110mm W 70mm mounting distance 80mm

Find the complete and up-to-date range of products in our GEV Webshop

1220/1221 series

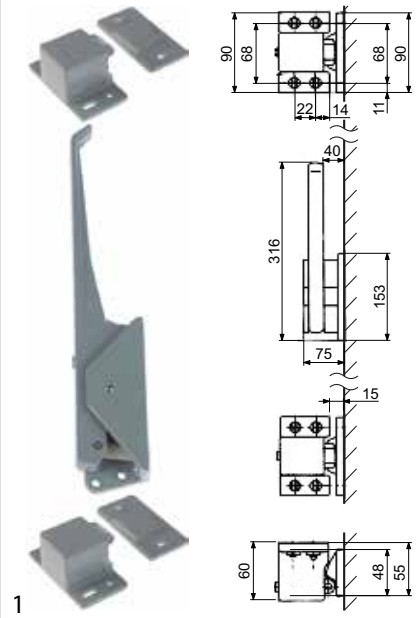

1

fig.	GEV No.	description	hinging	type
1	700611	walk-in fridge catch	left	1220
1	700612	walk-in fridge catch	right	1220

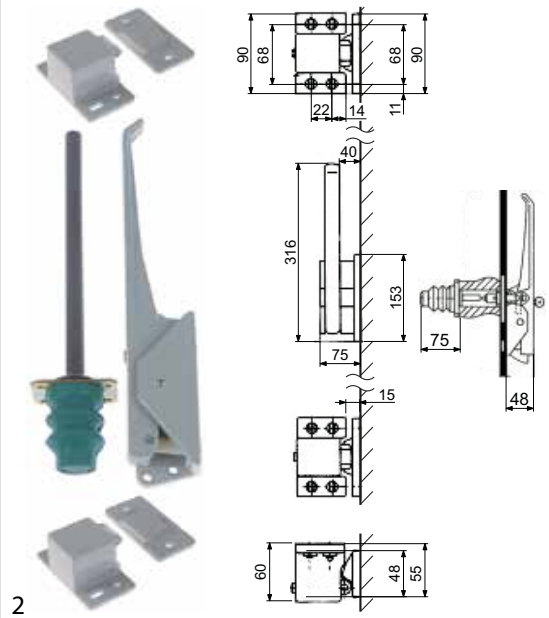

2

fig.	GEV No.	description	hinging	type
2	700613	walk-in fridge catch	left	1221
2	700614	walk-in fridge catch	right	1221

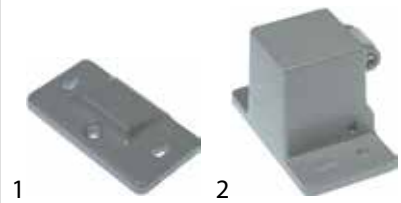

1 2

fig.	GEV No.	description
1	700610	door catch mounting distance 68mm W 50mm L 92mm H 19mm suitable for catch
2	700609	snap lock mounting distance 68mm W 52mm L 90mm H 60mm

INTERKLIMAT

1800 series

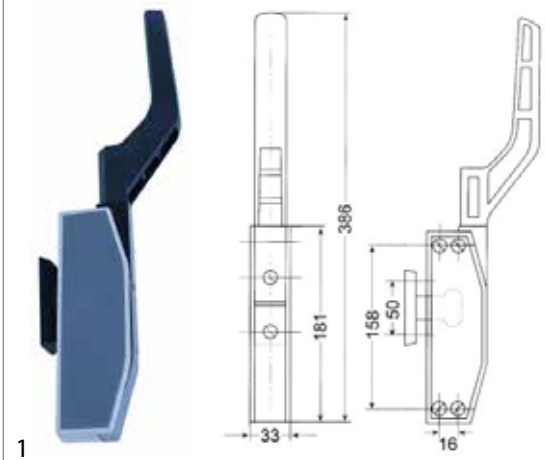

1

fig.	GEV No.	description	version	type
1	690457	handle latch	external lock	1825

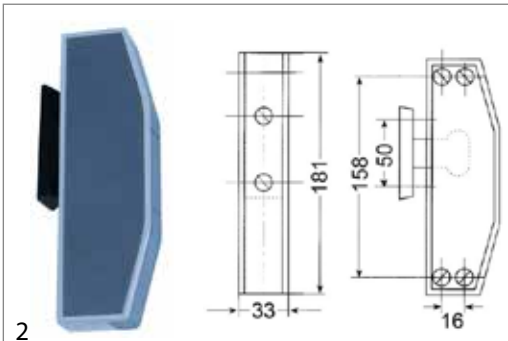

2

fig.	GEV No.	description	version	type
2	690678	handle latch	external lock	1875

1

fig.	GEV No.	version	type
1	700825	internal lock	2700

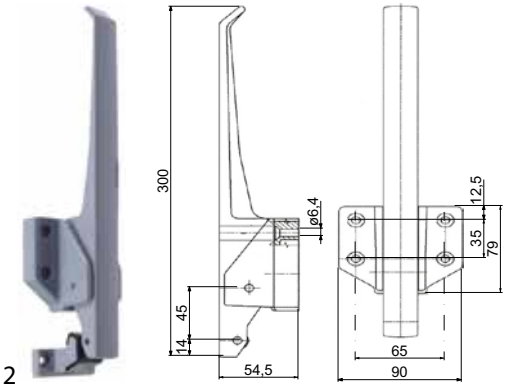

2

fig.	GEV No.	version	type
2	694229	internal lock	217 + 2132

2000 series

1

fig.	GEV No.	description	version	type
1	694079	catch	lockable	2225

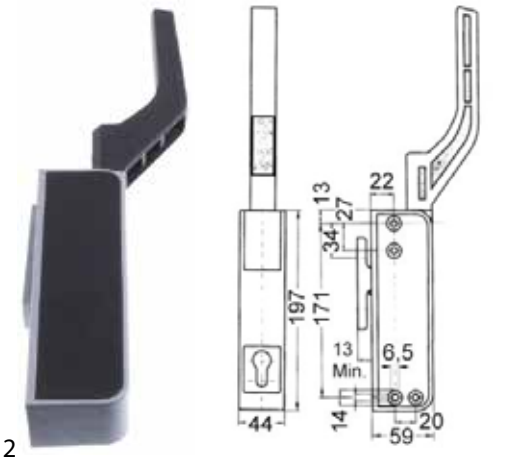

2

fig.	GEV No.	description	version	type
2	700786	catch	external lock	2025

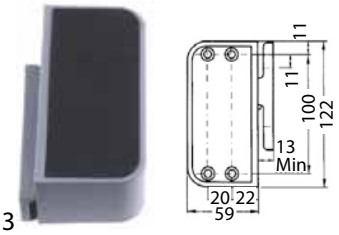

3

fig.	GEV No.	description	version	type
3	700787	latch block	external lock	2075

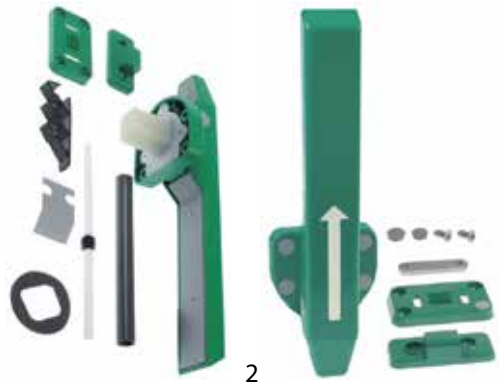

1 2

fig.	GEV No.	MD (mm)	version	type
1	694602	35x65	internal lock	2200
2	700825	35x65	internal lock	2700

1

fig.	GEV No.	description
1	694091	door catch mounting distance 49,5mm L 89,5mm

3000 series

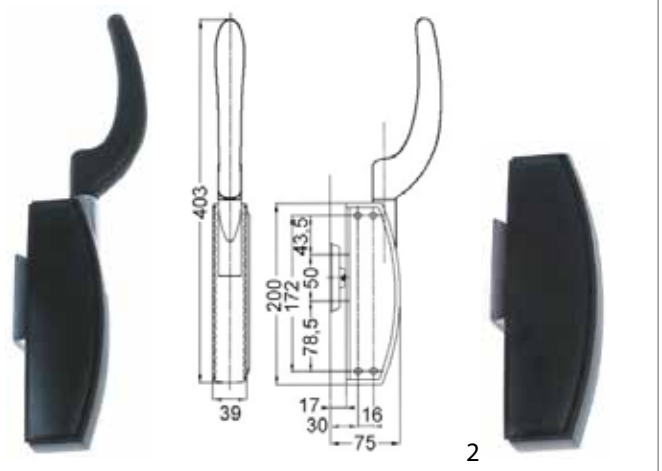

1 2

fig.	GEV No.	version	type
1	700393	external lock	3025

fig.	GEV No.	version	type
2	700626	external lock	3075

Find the complete and up-to-date range of products in our GEV Webshop

1

fig.	GEV No.	MD (mm)	version	type
1	700825	35x65	internal lock	2700

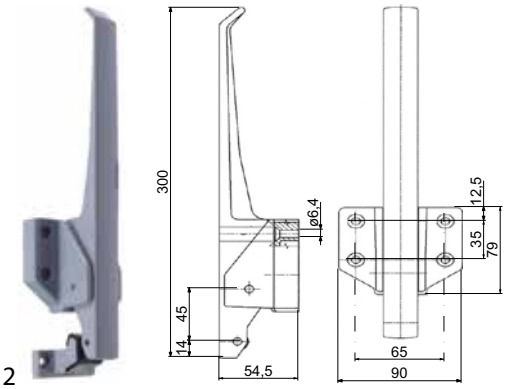

2

fig.	GEV No.	MD (mm)	version	type
2	694229	65x35	internal lock	217 + 2132

617/27-217/27 series

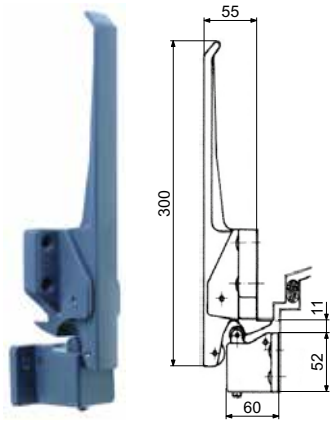

1

fig.	GEV No.	MD (mm)	version	type
1	694089	65x35	external lock	617/27/VE

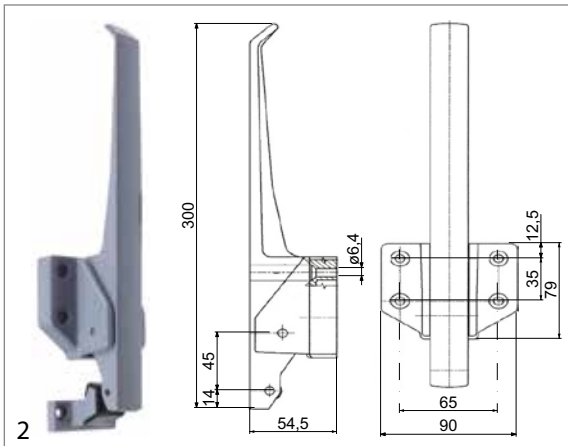

2

fig.	GEV No.	MD (mm)	version	type
2	694229	65x35	internal lock	217 + 2132

1

fig.	GEV No.	description
1	694090	walk-in fridge catch door thickness 27mm mounting distance 18-25x68mm W 90/75mm L 52/92mm

5000 series

1

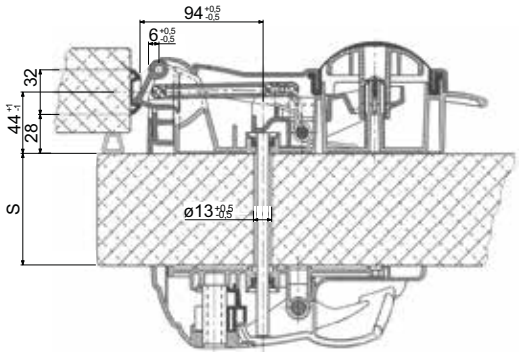

fig.	GEV No.	S (mm)	version	type
1	694081[1]	50-140	lockable	5325AB

[1]without door opener set

1

fig.	GEV No.	description	door thickness (mm)
1	694082	door opener set	50-60
1	694083	door opener set	60-80
1	694084	door opener set	80-100
1	694085	door opener set	100-120
1	694086	door opener set	120-140

MTH

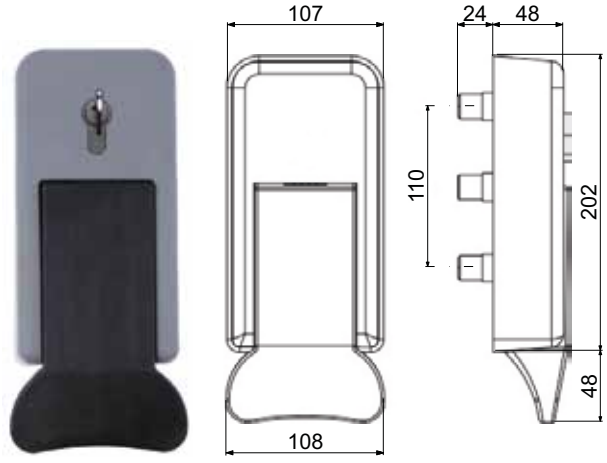

1

fig.	GEV No.	type	MP	door thickness (mm)	version
1	694077[1]	13CEC	external	up to 180	lockable

[1]matching door opener set 694076 must be ordered seperatly

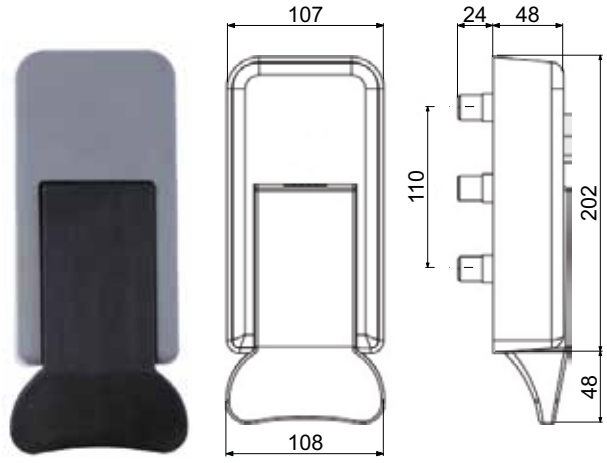

2

fig.	GEV No.	type	MP	door thickness (mm)	version
2	694074[1]	13CES	external	up to 180	non lockable

[1]matching door opener set 694076 must be ordered seperatly

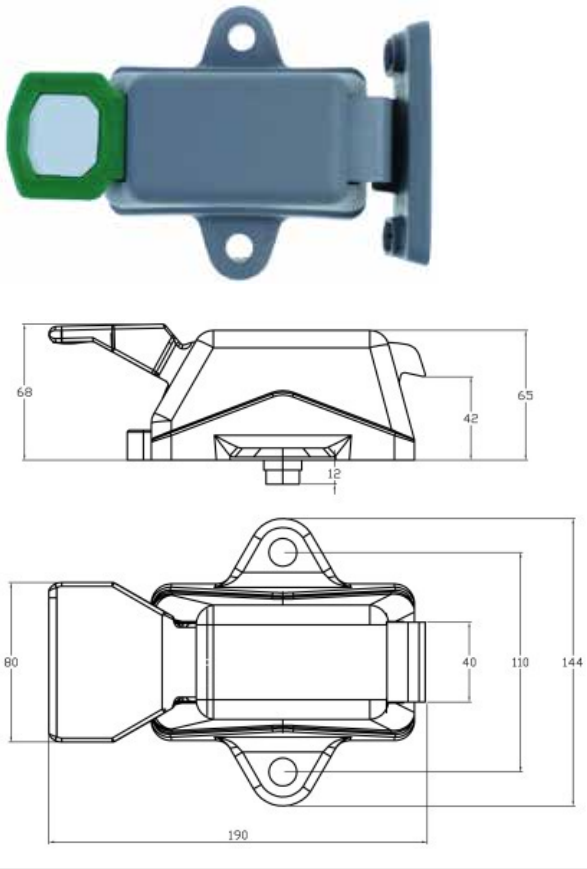

1

fig.	GEV No.	type	MP	door thickness (mm)
1	690658[1]	13CIN	internal	up to 180

[1]matching door opener set 694076 must be ordered seperatly

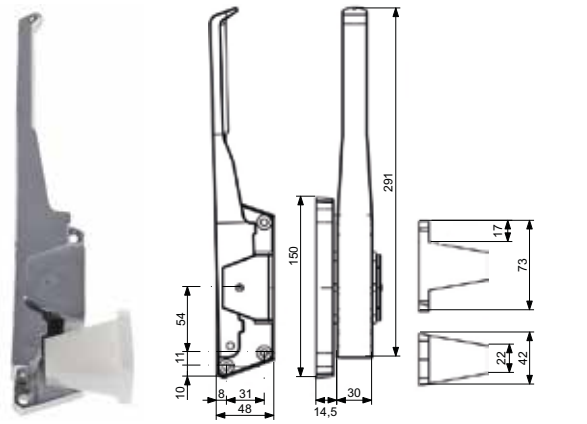

1

fig.	GEV No.	type	MP	door thickness (mm)	version
1	694778	13OZF	left	68-92	external

Find the complete and up-to-date range of products in our GEV Webshop

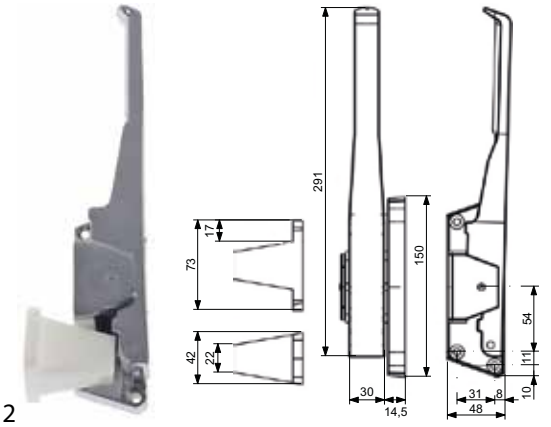

2

fig.	GEV No.	type	MP	door thickness (mm)	version
2	694777	13OZF	right	68-92	external

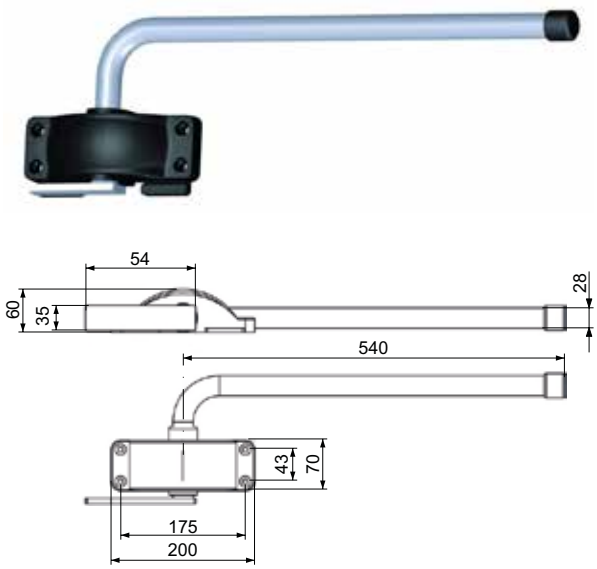

1

fig.	GEV No.	type	MP	door thickness (mm)	version
1	694779	13SEF	left/right	92-121	external

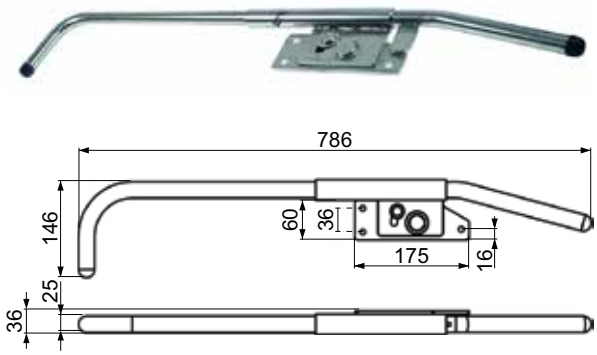

1

fig.	GEV No.	type	MP	door thickness (mm)	version
1	694245	13SIF	right		internal

accessories

1

fig.	GEV No.	description
1	694076	door opener set door thickness up to 180mm with threaded rods tie bar

S&S

1

fig.	GEV No.	type	door thickness (mm)	off-set (mm)	version
1	690231	2110	up to 70	28	lockable

2

fig.	GEV No.	type	door thickness (mm)	off-set (mm)	version
2	690230	2113	up to 100	28	lockable

CONI TECHNIC

1

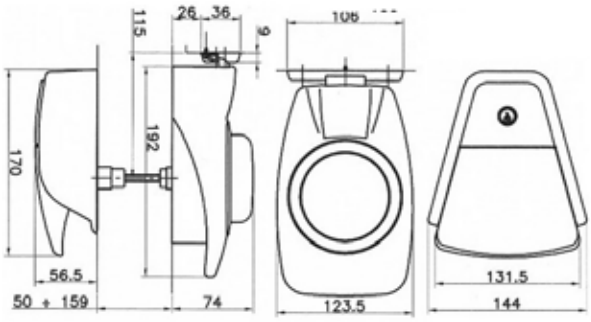

fig.	GEV No.	type	door thickness (mm)
1	690993	ActivA	50-140

tools

hand tools

pipe tools

MASTERCOOL

flaring tool sets

1

fig.	GEV No.	description
1	800416	flaring tool and expander set 2 flaring bars for 1/8",3/16",1/4",5/16",3/8",7/16",1/2",5/8",3/4" swaging adapter for 3/16",1/4",5/16",3/8",1/2",5/8",3/4"

hoses

supply hoses

PVC supply hoses

1

technical data:
operating pressure 10bar
temperature max. 90°C
approval KTW

fig.	GEV No.	NS	connections	L (mm)
1	520644	DN10	3/4"	1000+250/250

flaring tools

1

fig.	GEV No.	for pipe ø
1	800411	1/4",3/8",1/2",5/8",3/4"
1	800412	6,8,10,12,14,16,18mm

2

fig.	GEV No.	for pipe ø
2	800413	3/16,5/16,3/8,1/2,5/8,3/4"
2	800414	4,6,8,10,12,15,16mm

Find the complete and up-to-date range of products in our GEV Webshop

3

fig.	GEV No.	for pipe ø
3	800415	3/16,5/16,3/8,1/2,5/8,3/4"

expanders

1

fig.	GEV No.	description
1	800339	hydraulic expander set 10mm,12mm,15mm,16mm,18mm,22mm,28mm

2

fig.	GEV No.	description
2	800338	hydraulic expander set 3/8",1/2",5/8",3/4",7/8" and 1 1/8"

pipe benders

1

fig.	GEV No.	description
1	800421	pipe bender for pipe ø 6-8-10mm

pipe cutters

1

2

fig.	GEV No.	application	pipe ø
1	800400	copper, aluminum, brass, steel	6 up to 28mm
2	800401	copper, aluminum, brass, steel	6 up to 38mm

3

4

fig.	GEV No.	application	pipe ø
3	800402	copper, aluminum, brass, steel	3 up to 16mm
3	800403	copper, aluminum, brass, steel	4 up to 28mm
4	800404	copper, aluminum, brass, steel	4 up to 28mm
4	800405	copper, aluminum, brass, steel	6 up to 40mm

5

fig.	GEV No.	application	pipe ø
5	800410	for capillary tube	up to 0.156"

1

fig.	GEV No.	description
1	800409	spare cutting wheel
1	800406	spare cutting wheel suitable for 800400
1	800407	spare cutting wheel suitable for 800401
1	800408	spare cutting wheel suitable for 800402

ROTHENBERGER

pipe benders

1

fig.	GEV No.	description
1	800260	pipe bender for pipe ø 6-8-10mm accurate up to 180°

2

fig.	GEV No.	description
2	800268	tube bending spring for copper pipes for pipe ø 10mm L 250mm
2	800269	tube bending spring for copper pipes for pipe ø 12mm L 300mm
2	800270	tube bending spring for copper pipes for pipe ø 15mm L 300mm

pipe cutters

1

fig.	GEV No.	application	pipe ø
1	800261	for copper and aluminium	3-28mm 1/8"-1 1/8"

1

fig.	GEV No.	description
1	800262	spare cutting wheel ø 16mm suitable for 800261

IMPORT

flaring tool sets

1

fig.	GEV No.	description
1	801193	cutting and flaring tool set for 4mm,6mm,8mm,10mm,12mm,15mm and 16mm
1	801183	cutting and flaring tool set for 3/16",1/4",5/16",3/8"7/16",1/2" and 5/8"

2

fig.	GEV No.	description
2	801886	cutting and eccentric flaring-tool set for 5mm,6mm,8mm,10mm,12mm,16mm and 19mm
2	801887	cutting and eccentric flaring-tool set for 3/16",1/4",5/16",3/8",1/2" and 3/4"

Find the complete and up-to-date range of products in our GEV Webshop

3

fig.	GEV No.	description
3	801888	cutting and eccentric flaring-tool set for 6mm,8mm,10mm,12mm,16mm,19mm, 1/4",5/16",3/8",1/2" and 3/4"
3	801889	cutting and eccentric flaring-tool set for 5mm,6mm,8mm,10mm,12mm,16mm,19mm, 3/16",1/4",5/16",3/8",1/2" and 3/4"

4

fig.	GEV No.	description
4	801194	espander and flaring tool set for 4mm,6mm,8mm,10mm,12mm,15mm,16mm,18mm and 22mm
4	801184	espander and flaring tool set for 1/8",3/16",1/4",5/16",3/8"7/16",1/2",5/8" and 3/4"

5

fig.	GEV No.	description
5	801883	pipe flaring tool and expander set for 10mm,12mm,16mm,19mm,22mm,25mm and 28mm
5	801882	flaring tool and expander set for 3/8",1/2",5/8",3/4",7/8",1" and 1 1/8"

6

fig.	GEV No.	description
6	801885	hydraulic flaring-tool and expander set for 10mm,12mm,16mm,19mm,22mm,25mm and 28mm
6	801884	hydraulic flaring-tool and expander set for 3/8",1/2",5/8",3/4",7/8",1" and 1 1/8"

flaring tools

1

fig.	GEV No.	description
1	801881	flaring tool for pipe ø 3/16,1/4,5/16,3/8,1/2,5/8"

2

fig.	GEV No.	description
2	801204	tubing support flaring and swaging for pipe ø 6/8/10/12/14/16mm

3

fig.	GEV No.	description
3	801214	tubing support flaring and swaging for pipe ø 4/6/8/10/12/14/16/18/22mm

expansion mandrels

1

fig.	GEV No.	for pipe ø
1	801891	1/2",5/8",7/8"
1	801892	1/4",5/16",3/8",1/2",5/8",3/4"

pipe benders

1

fig.	GEV No.	description
1	801859	pipe bender for pipe ø 6mm
1	801860	pipe bender for pipe ø 8mm
1	801866	pipe bender for pipe ø 10mm
1	801823	pipe bender for pipe ø 1/4"
1	801824	pipe bender for pipe ø 3/8"
1	801858	pipe bender for pipe ø 1/2"

pipe cutters

1

2

fig.	GEV No.	application	pipe ø
1	801065	for copper pipes	3-16mm 1/8"-5/8"
2	801067	for copper pipes	3-28mm 1/8"-1 1/8"

3

fig.	GEV No.	application	pipe ø
3	801900	for capillary tube	up to 0.156"

1

fig.	GEV No.	description
1	801066	spare cutting wheel ø 20mm suitable for 801065
1	801068	spare cutting wheel suitable for 801067

fin combs

1

fig.	GEV No.	description
1	801897	fin comb

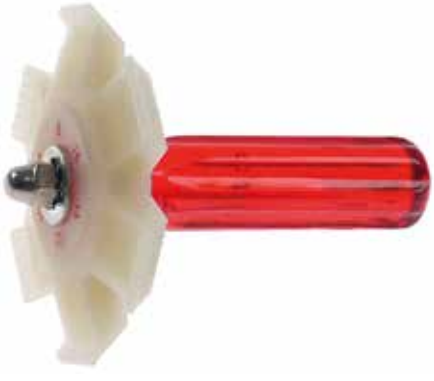

2

fig.	GEV No.	description
2	801894	fin comb sizes 8"/9"/10"/12"/14"/15"

Find the complete and up-to-date range of products in our GEV Webshop

mirrors

1

fig.	GEV No.	description
1	801895	mirror telescope ø 32mm L 500mm
1	801896	mirror telescope ø 50mm L 410mm

machining

deburrers

1

fig.	GEV No.	description
1	801411	deburrer for pipe with S-blades ø3.2mm HSS blades E 100 / E 200 / E350 with 3 blades

2

fig.	GEV No.	description
2	801893	deburrer internal/external for pipe ø 3/16" up to 1½" for pipe ø 5 up to 38mm

1

fig.	GEV No.	version	for pipe ø	for pipe ø (mm)
1	800263	internal/external	-	4 up to 36

power tools

torches

1

fig.	GEV No.	version	ø (mm)	handle ø (mm)	L (mm)
1	801770[1]	LED	22	16	170-545

[1]with flexible and magnetic head

refrigeration and air conditioning

manifolds

IMPORT

digital

1

technical data:
gas type R22/R134a/R404a/R407c/R502/R410a
connector 1/4" SAE

fig.	GEV No.	unit of pressure
1	800277	psi/bar/MPa/kPa/inHg

2

technical data:
gas type R22/R134a/R404a/R407c/R502/R410a
connector 1/4" SAE

fig.	GEV No.	unit of pressure
2	800282	psi/bar/MPa/kPa

3 4

technical data:
gas type R22/R134a/R404a/R407c/R502/R410a
connector 1/4" SAE

fig.	GEV No.	unit of pressure
3	800285	psi/bar/MPa/kPa
4	800287	psi/bar/MPa/kPa

analogue

1 2

fig.	GEV No.	ø (mm)	gas type	connector
1	800291	80	R12/R22/R134a/R404a	1/4" SAE
2	800292	80	R12/R22/R134a/R404a	1/4" SAE

3 4

fig.	GEV No.	ø (mm)	gas type	connector
3	800294	80	R22/R134a/R404	1/4" SAE
4	800296	80	R22/R134a/R404	3X1/4 SAE

5 6

fig.	GEV No.	ø (mm)	gas type	connector
5	800293	80	R410a	5/16" SAE
6	800295	80	R410a	3X5/16 SAE

MASTERCOOL

digital

1

technical data:
gas type for 66 refrigerants
connector 1/4" SAE

fig.	GEV No.	unit of pressure
1	800248	psi, inHg, Bar, MPa, Kg/cm²

analogue

1

fig.	GEV No.	ø (mm)	gas type	connector
1	800299	80	R22/R134a/R404a/R407c/R507a	1/4" SAE
1	800310	80	R1270, R290, R600a	1/4" SAE

2

fig.	GEV No.	ø (mm)	gas type	connector
2	800309	80	R22/R134a/R404a/R407c/R507a	1/4" SAE

Find the complete and up-to-date range of products in our GEV Webshop

fig.	GEV No.	ø (mm)	gas type	connector
3	800314	80	R22/R410a/R407c	5/16”
4	800313	80	R22/R410a/R407c	5/16”

fig.	GEV No.	ø (mm)	gas type	connector
5	800312	80	R22/R134a/R404a/R407c/R507a	1/4” SAE
6	800311	80	R22/R134a/R404a/R407c/R507a	1/4” SAE

fig.	GEV No.	ø (mm)	gas type	connector
7	800316	80	R1270, R290, R600a	1/4” SAE
8	800315	80	R1270, R290, R600a	1/4” SAE

manometers

IMPORT

analogue

fig.	GEV No.	connector	ø (mm)	gas type
1	800289	1/8” NPT	80	R22/R134a/R410a/R407c
2	800290	1/8” NPT	80	R22/R134a/R410a/R407c

fig.	GEV No.	connector	ø (mm)	gas type
3	800286	1/8” NPT	80	R410a
4	800288	1/8” NPT	80	R410a

digital

fig.	GEV No.	connection	gas type
1	800298	1/8” NPT	R22/R134a/R404a/R407c/R502/R410a
2	800297	1/8” NPT	R22/R134a/R404a/R407c/R502/R410a

MASTERCOOL

fig.	GEV No.	connection	ø (mm)	gas type
1	800319	5/16”	80	R22/R410a/R407c
2	800320	5/16”	80	R22/R410a/R407c

3 4

fig.	GEV No.	connection	ø (mm)	gas type
3	800321	1/4" SAE	80	R1270, R290, R600a
4	800322	1/4" SAE	80	R1270, R290, R600a

5 6

fig.	GEV No.	connection	ø (mm)	gas type
5	800317	1/4" SAE	80	R22/R134a/R404a/R407c/R507a
6	800318	1/4" SAE	80	R22/R134a/R404a/R407c/R507a

accessories

1 2

fig.	GEV No.	description
1	800324	protection cap for manometer ø 80mm red/blue
2	800323	protection cap for manometer ø 80mm red

3

fig.	GEV No.	description
3	800142	protection cap for manometer ø 80mm set 2-piece

hoses

IMPORT

1

technical data:
version set 3-piece
length 1500mm
connection 1 1/4" SAE
connection 2 1/4" SAE
operating pressure 52 bar

fig.	GEV No.	gas type
1	800275	R22/R134a/R404a/R407c/R502/R410a

1

technical data:
version set 3-piece
length 1500mm
connection 1 5/16" SAE
connection 2 5/16" SAE
operating pressure 58 bar

fig.	GEV No.	gas type
1	800276	R410a

MASTERCOOL

1

technical data:
length 1500mm
connector 1/4" SAE
operating pressure 52 bar

fig.	GEV No.	gas type
1	800325	R12/R22/R502/R507A/R134a/R404a/R407c

2

technical data:
length 1500mm
connector 1/4" SAE
operating pressure 52 bar

fig.	GEV No.	gas type
2	800326	R12/R22/R502/R507A/R134a/R404a/R407c

Find the complete and up-to-date range of products in our GEV Webshop

3

technical data:
length 1500mm
connector 1/4" SAE
operating pressure 52 bar

fig.	GEV No.	gas type
3	800327	R12/R22/R502/R507A/R134a/R404a/R407c

1

technical data:
length 1500mm
operating pressure 56 bar

fig.	GEV No.	gas type	connector
1	800340	R22/R134a/R404a/R407c/R502/R410a	1/4" SAE
1	800329	R22/R410a/R407c	5/16" SAE

1

fig.	GEV No.	gas type	connection 1:	connection 2:
1	800330	R22/R410a/R407c	1/4" SAE	5/16" SAE

2

fig.	GEV No.	gas type	connection 1:	connection 2:
2	800331	R22/R410a/R407c	1/4" SAE	5/16" SAE

shut-off valves

1

2

3

technical data:
gas type R12/R22/R502/R134a/R404a/R407c/R410a

fig.	GEV No.	connector	fig.	GEV No.	connector
1	800281	5/16" SAE	2	800279	1/4" SAE
1	800278	1/4" SAE	3	800284	5/16" SAE
2	800283	5/16" SAE	3	800280	1/4" SAE

nitrogen pressure regulators

1

technical data:
connection 1/4" SAE
high pressure gauge 300bar
low pressure gauge 70bar
approval CE

fig.	GEV No.	countries	fig.	GEV No.	countries	fig.	GEV No.	countries
1	800335	D/F	1	800336	GB	1	800337	I

refrigerant recovery devices

1

fig.	1
GEV No.	800334
compressor type	oil-free - 1/2HP
vapor (kg/h)	12
liquid (kg/h)	71
push-pull (kg/h)	326
connector	1/4“ SAE
voltage	220V - 50/60Hz
temp. (°C)	0-50
weight (kg)	16
coolant	CFC, HFC, HCFC
check	TÜV/GS

2

fig.	2
GEV No.	800342
compressor type	oil-free - 1/2HP
vapor (kg/h)	20
liquid (kg/h)	68
push-pull (kg/h)	326
connector	1/4“ SAE
voltage	220V - 50/60Hz
temp. (°C)	0-50
weight (kg)	16
coolant	CFC, HFC, HCFC
check	-

1

fig.	1
GEV No.	800267
compressor type	oil-free - 3/8HP
vapor (kg/h)	17
liquid (kg/h)	114
connector	1/4“ SAE with snap-on connection
version	with ball valve
voltage	220V - 50/60Hz
temp. (°C)	0-49
weight (kg)	17
coolant	all refrigerants

vacuum pumps

1

fig.	1	1
GEV No.	801902	801903
pump rate (l/min)	60	120
pump rate (cf/m)	2.2 / 2.6	4.2 / 5
P (W)	250	370
volt. (V)	220/110	220/110
freq. (Hz)	50/60	50/60

Find the complete and up-to-date range of products in our GEV Webshop

1

fig.	1	1
GEV No.	801905	801906
version	2-stage	2-stage
pump rate (l/min)	35	119
pump rate (cf/m)	1.5	7
P (W)	125	375
volt. (V)	220	220
freq. (Hz)	230V 50/60Hz	230V 50/60Hz

1

fig.	GEV No.	L (mm)	connection	operating pressure
1	800328	1500	3/8" SAE - 3/8" SAE	52 bar

valve core removers

1

fig.	GEV No.	connection
1	800332	1/4" SAE

2

fig.	GEV No.	connection
2	800333	1/4" SAE, 1/2"-20UNF

pliers

1

fig.	GEV No.	description
1	800420	pinch-off pliers refrigeration

2

fig.	GEV No.	description
2	800419	tube piercing pliers refrigeration

refrigeration ratchet wrenches

1

fig.	GEV No.	description
1	801899	refrigeration ratchet wrench hexagonal 9/16",1/2"; square 1/4",3/16"

2

fig.	GEV No.	description
2	801898	refrigeration ratchet wrench square 1/4",3/8",3/16",5/16"

1

fig.	GEV No.	description
1	800417	refrigeration ratchet wrench hexagonal 9/16",1/2"; square 1/4",3/16"

2

fig.	GEV No.	description
2	800418	refrigeration ratchet wrench square 1/4",3/8",3/16",5/16"

pipe connectors

VULKAN LOKRING

LOKRING tube connections can be made without a great deal of force being necessary, using simple hand assembly tools. LOKRING ensures an absolutely clean, permanent and purely mechanical tube connection with long-term hermetic air-tightness.This is confirmed by the special TÜV test and approval. All this makes LOKRING tube connections one of the most economical and reliable methods of connecting refrigerant tubes.

tools

mounting pliers

1

fig.	GEV No.	description
1	800363	Mounting pliers LOKRING HMRK-V - Patented lever mechanism for assembly with minimum effort. - Assembly jaws are easy to change for different tube diameters. - Both handles bend for use in hard-to-reach areas. - Made in Germany.

assembly jaws

1

fig.	GEV No.	for	for pipe ø	type
1	750598	Typ 50	9-11mm (3/8")	MB10EVP
1	750599	Typ 50	12-13mm (1/2")	MB12EVP
1	750596	type 00	1.6-8.5mm (1/16" - 5/16")	MB8
1	750597	type 00	9-11mm (3/8")	MB10

pipe cutters

1

fig.	GEV No.	application	pipe ø	type
1	801995	for capillary tube	up to 0.156"	CTP-1

pinch-off pliers

1

fig.	GEV No.	description
1	800360	Pinch-off tool ABZ-008 - For pinching off charging tubes. - Diameter range: up to 10 mm (3/8")

tube piercing pliers

1

fig.	GEV No.	description
1	800361	Piercing pliers EZ-LC - For recovering refrigerant from defective but still pressurised refrigeration circuits. - Suitable for copper tubes. - For tube outer diameter of 6 mm (1/4"). - Hose connection: 1/4" SAE

connectors type AL

For connecting aluminium tubes and for connecting aluminium tubes to copper or steel tubes with identical tube outer diameters.

1

technical data:
maximum operation pressure 25bar / 360psi
quantity 5 pcs

fig.	GEV No.	for pipe ø	type
1	750587	5mm (3/16")	5NKAL00
1	750583	8mm (5/16")	8NKAL00

reducing connectors type AL

For connecting aluminium tubes and for connecting aluminium tubes to copper or steel tubes with different tube outer diameters.

1

technical data:
maximum operation pressure 25bar / 360psi
quantity 5 pcs

fig.	GEV No.	for pipe ø	type
1	750589	5mm (3/16") - 1,8mm	5/1,8NRAL00
1	750592	5mm (3/16") - 2mm (5/64")	5/2NRAL00
1	750588	8mm (5/16") - 6mm (1/4")	8/6NRAL00

Find the complete and up-to-date range of products in our GEV Webshop

connectors type MS

For connecting copper and/or steel tubes with identical tube outer diameters.

1

technical data:
maximum operation pressure 25bar / 360psi
quantity 5 pcs

fig.	GEV No.	for pipe ø	type
1	750591	2mm (5/64")	2NKMS00
1	750581	3mm	3NKMS00
1	750582	4mm (5/32")	4NKMS00
1	750573	5mm (3/16")	5NKMS00
1	750576	6mm (1/4")	6NKMS00
1	750577	8mm (5/16")	8NKMS00
1	750574	10mm	10NKMS00

2

technical data:
maximum operation pressure 25bar / 360psi
quantity 5 pcs

fig.	GEV No.	for pipe ø	type
2	750601[1]	5mm (3/16")	5NKMSSV00
2	750600[1]	6mm (1/4")	6NKMSSV00

[1]with Schrader valve

1

technical data:
maximum operation pressure 75bar / 1088psi
quantity 5 pcs

fig.	GEV No.	for pipe ø	type
1	750575	12mm	12NKMS50

reducing connectors type MS

For connecting copper and/or steel tubes with different tube outer diameters.

1

technical data:
maximum operation pressure 25bar / 360psi
quantity 5 pcs

fig.	GEV No.	for pipe ø	type
1	750585	5mm (3/16") - 1,8mm	5/1,8NRMS00
1	750595	5mm (3/16") - 2mm (5/64")	5/2NRMS00
1	750578	8mm (5/16") - 6mm (1/4")	8/6NRMS00
1	750593	3mm - 2mm (5/64")	3/2NRMS00
1	750584	4mm (5/32") - 2mm (5/64")	4/2NRMS00
1	750594	6mm (1/4") - 2mm (5/64")	6/2NRMS00
1	750580	6mm (1/4") - 3mm	6/3NRMS00
1	750586	6mm (1/4") - 5mm (3/16")	6/5NRMS00

1

technical data:
maximum operation pressure 75bar / 1088psi
quantity 5 pcs

fig.	GEV No.	for pipe ø	type
1	750579	12mm - 10mm	12/10NRMS50

plugs

For hermetically sealing tube ends.

1

technical data:
quantity 5 pcs

fig.	GEV No.	for pipe ø	type
1	750605	5mm (3/16")	5VSMS00
1	750607	6mm (1/4")	6VSMS00
1	750606	7mm	7VSMS00
1	750604	8mm (5/16")	8VSMS00

NAV connections

Allows the use of LOKRING on the short tube ends of a compressor.

stabilisation inserts

Can only be used in conjunction with the NAV assembly tool and the corresponding NAV assembly insert.

1

technical data:
quantity 5 pcs

fig.	GEV No.	for pipe ø	type
1	750603	7mm	NAV7
1	750602	6,35mm (1/4")	NAV6

mounting tools

Basic tool for assembling LOKRING NAV connections.

1

technical data:
quantity 1 pcs

fig.	GEV No.	for pipe ø	type
1	750613	11mm	NAV11

mounting inserts

Assembly insert for the NAV 11 assembly tool for assembling LOKRING NAV connections.

1

technical data:
quantity 1 pcs

fig.	GEV No.	for pipe ø	type	fig.	GEV No.	for pipe ø	type
1	750612	6mm	NAV-E6	1	750611	7/8mm	NAV-E8/7

filter driers

1

fig.	GEV No.	size	ø (mm)	L (mm)	connection	type
1	750609	10g XH-9	19	200	ø5mm	DR10

2

fig.	GEV No.	size	ø (mm)	L (mm)	connection	type
2	750608[1]	11g XH-9	19	245	ø5mm	DRS11
2	750610[1]	15g XH-9	25	230	ø5/6mm	DRS15

[1]with Schrader valve

supporting materials

adhesives and sealants

1

fig.	GEV No.	product name	features	container	content (ml)
1	890053	LOKREP65G	liquid	bottle	15

non-woven abrasives

1

fig.	GEV No.	W (mm)	L (mm)	H (mm)
1	800362	160	220	8

welding material

gas soldering

1

fig.	GEV No.	description
1	800078	Brazing torch - Rothenberger POWER MAPP Faster and more economical than a conventional soldering iron - Immediate push-button ignition - Precise flame adjustment - Constant gas pressure - Optimal operation even at low temperatures (approx. -20 °C) - Works in any position - Easy conversion to other fuels (multigas, maxigas, minigas) - Piezoelectric ignition

welding devices

1

fig.	GEV No.	description
1	800247	Autogenous welding and brazing tool - Rothenberger ROXY 400L Versatile autogenous welding and brazing tool for demanding DIYers and professionals alike. The set contains two high-power welding nozzles and three micro-nozzles for professional precision engineering and modelmaking work. The tool is TÜV-certified and has all the prescribed safety features. Gas and oxygen check valves are integrated. - Working range: 0.1 - 1.5mm - 2 high-power nozzle and 3 micro-nozzles - TÜV-certified

Find the complete and up-to-date range of products in our GEV Webshop

2

fig.	GEV No.	description
2	800079	Autogenous welding and brazing tool - Rothenberger ROXY KIT PLUS Versatile autogenous welding and brazing tool for demanding DIYers and professionals alike. The set contains a high-power welding nozzles and three micro-nozzles for professional precision engineering and modelmaking work. The tool is TÜV-certified and has all the prescribed safety features. Gas and oxygen check valves are integrated. - Working range: 0.1 - 1.5mm - 1 high-power nozzle and 3 micro-nozzles - TÜV-certified

gas

1 2

fig.	1	2
GEV No.	800084	800085
gas type	propylene/butane	LPG
content (ml)	750	630
status	new	new
for	POWER MAPP	ROXY KIT/ROXY 400L

3

fig.	3
GEV No.	800086
gas type	oxygen
content (ml)	930
status	new
for	ROXY KIT

[1]incl. deposit

4

fig.	4
GEV No.	800246[1]
gas type	oxygen
content (ml)	2000
status	filled
for	ROXY 400 L

brazing and soldering materials

1

fig.	GEV No.	type	material	size (mm)	Qty	t.max. (°C)
1	800251	Rolot 602	brass	ø2.5x333	5 pieces	890
1	800249	Rolot 607	copper	ø2x333	5 pieces	710
1	800250	Rolot 608	lead	ø5x333	1 piece	236

gas lighters

1

fig.	GEV No.	description
1	800257	gas lighter bendable

2

fig.	GEV No.	description
2	800256	gas lighter straight

measuring equipment

measuring tools

scales

1

fig.	GEV No.	measuring range	resolution	dimensions (mm)	approval
1	801901	10g-100kg	10g	223x223	CE

1

fig.	GEV No.	measuring range	resolution	dimensions (mm)	approval
1	801907	10g-100kg	10g	220x220	CE
1	801908[1]	50g-50kg	50g	220x220	CE OIML

[1]individually tested with OIML certificate

2

fig.	GEV No.	measuring range	resolution	dimensions (mm)	approval
2	801993	1g-5kg	1g	185x140x35	CE

meters

temperature meters

temperature meters with integrated probe

1 2

fig.	1	2
GEV No.	800038	802116
version	water proof	with plunge probe
measurement unit	°C/°F	°C/°F
measuring range (°C)	-50 up to +300	-50 up to +300
probe	core probe	core probe
resolution	0.1/1°C	0.1°C
display	4 digits	3½ digits
type	ST-9226A	WT-2
dimensions (mm)	141x95x26	116x58x18
probe L (mm)	144	105
probe ø (mm)	3.5	3.5
CL (mm)	900	500

Find the complete and up-to-date range of products in our GEV Webshop

leak detectors

for coolant

1

2

fig.	GEV No.	sensitivity	t.range (°C)	probe L (mm)	type	approval
1	801787	3gr/year	0-52	355	HILD100+	-
2	801880[1]	2gr/year	0-50	355	SLD300	-

[1]external battery charger

3

fig.	GEV No.	sensitivity	t.range (°C)	probe L (mm)	type	approval
3	801879	3gr/year	0-50	300	AS-200	-

1

fig.	GEV No.	sensitivity	t.range (°C)	probe L (mm)	type	approval
1	801909[1]	7gr/year	-17 up to +60	400	55800	CE

[1]detects also flammable gases

2

fig.	GEV No.	sensitivity	t.range (°C)	probe L (mm)	type	approval
2	801904[1]	3gr/year	0-50	410	55200	CE

[1]UV leak detector

3

fig.	GEV No.	sensitivity	t.range (°C)	probe L (mm)	type	approval
3	801910	3gr/year	0-50	410	55100	CE

1

fig.	GEV No.	description
1	801911	5 u/v LED leak detector lamp with UV glasses The UV leak detection lamp enables leaks in the system to be detected. The glasses enhance the lighting effect of the additive.

2

fig.	GEV No.	description
2	801912	BRILLIANT - bottle 100ml Yellow UV leak detector dye for A/C systems. Provides safe, fast and precise detection of small refrigerant gas leaks in rubber and metall parts of A/C and refrigeration systems. - Add 7,5 ml (1/4 oz.) of leak detector for every 1,5 kg (3,3 lbs.) of refrigerant gas. - Visible to any U/V light - Ideal for preventative purposes - Solvent-free according to norm SAE J2297. - Will not clog A/C, Refrigeration or Recovery System - Maximum pressure of A/C system when inserting leak detector in cartridges: 5.5bar (80psi). - Each package contains identification stickers.

thermometers

built-in thermometers

battery powered

1

2

fig.	GEV No.	MM (mm)	FM (mm)	measuring range (°C)	probe	CL (mm)
1	379259	58x25	62x29	-50 up to +70	ø3.9x20mm	1500
2	379449	58x25	62x29	-50 up to +70	ø3.9x20mm	1500

3

4

fig.	GEV No.	MM (mm)	FM (mm)	measuring range (°C)	probe	CL (mm)
3	379602	58x25.5	62x36	0 up to +150	special	1500
4	379258[1]	46x26.6	48x29	-50 up to +70	ø9x36mm	1000

[1]with frame 379808 also as wall-mounted version

5

6

fig.	GEV No.	MM (mm)	FM (mm)	measuring range (°C)	probe	CL (mm)
5	378099	51.5x24.5	53x28	-50 up to +150	ø3.5x46mm	1000
5	379604	51.5x24.5	53x28	-50 up to +300	ø3.5x46mm	1000
6	378100	59x33	62x36	-50 up to +150	ø3.5x46mm	1000
6	379603	59x33	62x36	-50 up to +300	ø3.5x46mm	1000

external power supply

1

technical data:
voltage 230V
voltage type AC

fig.	GEV No.	MM (mm)	FM (mm)	measuring range (°C)	probe	CL (mm)
1	378274[1]	58x25.5	64x31	-30 jusqu'à +110	ø6x40mm	2500

[1]incl. 1x NTC probe

2

technical data:
voltage 230V
voltage type AC

fig.	GEV No.	MM (mm)	FM (mm)	measuring range (°C)	probe	CL (mm)
2	379262[1]	66.5x49.5	71.5x55	0 up to +250	ø6x35mm	1450

[1]incl. 1x NTC probe

accessories

1

fig.	GEV No.	description
1	379808	frame for thermometer internal size 47x27mm W 53mm

Find the complete and up-to-date range of products in our GEV Webshop

thermometers with core sensor

1

2

fig.	GEV No.	measuring range (°C)	display	probe L (mm)
1	541097	-10 up to 100	analogue	120
2	802028	-10 up to 100	analogue	130

3

4

fig.	GEV No.	measuring range (°C)	display	probe L (mm)
3	541634	-50 up to +300	digital	85
4	541635	-50 up to +300	digital	108

5

6

fig.	GEV No.	measuring range (°C)	display	probe L (mm)
5	541636	-50 up to +300	digital	115
6	541087	-50 up to +300	digital	120

7

fig.	GEV No.	measuring range (°C)	display	probe L (mm)
7	541096	-50 up to +300	digital	120

miscellaneous

1

2

fig.	GEV No.	measuring range (°C)	size	display
1	541093	-30 up to +30	ø60mm	analogue
2	541098	-30 up to +50	ø52mm	analogue

3

4

fig.	GEV No.	measuring range (°C)	size	display
3	541094	-40 up to +25	124x30mm	analogue
4	381349	-50 up to +70	100x100	digital, with battery

5

fig.	GEV No.	measuring range (°C)	size	display
5	381350	-50 up to +70	65x95	digital, with battery

consumables

sprays

1

2

fig.	GEV No.	description	description
1	890214	industrial cleaner spray	EUROLOCK LOS 220 - spray can 400ml Highly effective cleaner for maintenance, repair and assembly of machines, vehicles, precision machines and tools. It dissolves old and gummed-up oil and grease residue as well as brake fluid and silicone residue. For preliminary and basic cleaning, it degreases all sliding surfaces and parts for subsequent application of special lubricants. Works fast and evaporates completely, leaving no residue. Test plastic surfaces for compatibility prior to use.
2	890030	leak detection spray	AOFix - spray can 400ml Leaks and cracks become visible. The AOfix leakage detection spray is useable in high, middle and low pressure. It is adapted to every equipment, tank facilities but also cooling and heating systems, valves, taps, hoses etc. It is anti-corrosion and oil, fat, acids, soap free. Because AOfix is non-flammable, it is applicable in the case of technical gas like ammonia, argon and other noble gases, carbon dioxide, illuminating gas, compressed air, propane, oxygen, nitrogen, hydrogen etc. AOfix leakage detection spray corresponds to all norms and is DIN-DVGW-approved. It is not toxic and low in odor. The AOfix leakage detection spray -15°C is useable by frost.

sealants and adhesives

instant adhesives

1

2

fig.	GEV No.	description
1	890136	LOCTITE® 401™ - tube 3g Designed for the assembly of difficult-to-bond materials which require uniform stress distribution and strong tension and/or shear strength. The product provides rapid bonding of a wide range of materials, including metals, plastics and elastomers. LOCTITE® 401™ is also suited for bonding porous materials such as wood, paper, leather and fabric.
2	890138	LOCTITE® 454™ - tube 20g Instant adhesive designed for the assembly of difficult-to-bond materials which require uniform stress distribution and high tensile and/or shear strength. The product provides for the rapid bonding of a wide range of materials, including metals, plastics and elastomers. The gel consistency enables overhead and vertical application. LOCTITE® 454™ is also suited to bonding porous materials such as wood, paper, leather and fabric.

cleaning agents

technical degreasers

1

fig.	GEV No.	description
1	801490	gasket cleaner PROFESSIONAL - spray bottle 500ml cleans and disinfects gaskets and interiors of fridges.

Find the complete and up-to-date range of products in our GEV Webshop

NOTES

NOTES

ALPHABETIC INDEX

A

axial fans 52

B

ball check valves 63
brazing and soldering materials 123

C

cleaning agents 128
cold air circulating fans (complete) 56
compressors 46
condensing trays heated 52
consumables 128
cooling water regulators 62
core probes 42
cross flow fans 59

D

deburrers 113
defrost timers 19
drawer latches 89

E

edgemount latches 82
electronic controllers 21
evaporators 68
expansion valves 62

F

fans 52
filter driers 66
fin combs 112
foil heating elements 17

G

gas 123
gas lighters 123
gas soldering 122
gastronorm 61
grids 70

H

hand tools 108
handle latches 83
heating cables 17
heating cartridges 17
heating elements 17
heating elements for defrosting 17
heating elements for refrigeration 17
hoses 108, 116
humidity probes 42

I

indicators 65
instant adhesives 128

L

latches without handle 82
leak detectors 125
line piercing valves 64

M

machining 113
magnetic locks 88
manifolds 113
manometers 115
measuring equipment 124
measuring tools 124
meters 124
mirrors 113

N

nitrogen pressure regulators 117
non-return valves 63

P

pipe tools 108
pliers 119
power tools 113
pressure probes 42
pressure switches 45
probes 40
push button latches 82
push switches 18
PVC supply hoses 108

R

refrigerant recovery devices 118
refrigeration cycle components 62
refrigeration fans 54
refrigeration gaskets 70
refrigeration motors universal 54
refrigeration pipes 67
refrigeration ratchet wrenches 119
refrigeration thermostats 18
reversing valves 64
rocker switches 18

S

scales 124
Schrader valves 67
screw connections 67
sealants and adhesives 128
shelves and shelf rails 70
shut-off valves 64, 117
solenoid valves 43
sprays 128
supply hoses 108
switches 18

T

technical degreasers 128
temperature meters 124
temperature probes 40
thermostats 18
timers 19
tools 108
torches 113
transformers 20

U

union nuts 68
universal probes 40

V

vacuum pumps 118
valve core removers 119

W

walk-in fridge catches 92
welding devices 122
welding material 122

Spare parts suitable for more than 70 key

Refrigeration equipment manufacturers

Top quality branded parts from leading manufacturers

AKO
Armacell
Aspera
Carel
Castel
CDC
Coprel
Cubigel
Danfoss
Dixell
Ebm-papst
Ektron
Elco
Eliwell
Embraco
EVCO
Fermod
Germani
Hidria
Interklimat
Intertecnica
LAE Electronic
Marquardt
Mastercool
MTH
Priolinox
Prodigy
Rahrbach
Ranco
Refco
Rothenberger
Störk-Tronik
STUV
Tecnologic
Vulkan-Lokring
ZIEHL-ABEGG

Spare parts suitable for all the main commercial refrigeration brands

Afinox
Alaska
Alpeninox
Angelo Po
Brema
Brice Italia
Cold Master
Coldline
Coreco
Costan
Criocabin
Desmon
Dexion
Electrolux
Elmeco
Emmepi
Enofrigo
Eurfrigor
Everlasting
Fagor
Fiocchetti
Foinox
Foster
Frenox
Friulinox
GBG Refrigeration
Gemm
Giga
Gram
Hiber
Hoshizaki
Iarp
Iberna
Ice-O-Matic
Icematic
Ilsa
IME Turbo
Infrico
Inomak
Irinox
ISA
ITV
Jordão
Kastel
Lainox
Liebherr
Luxia
Mach
Manitowoc
Mareno
Migel
Misa
Modular
Mondial Elite
Normann
Nortech
NTF
Olis
Polaris
Rancilio
Ronda
SAGI
Scotsman
Silko
Simag
Staff Ice System
Studio 54
Surfrigo
Tecfrigo
Tecnodom
Thirode
True
Ugolini
Whirlpool
Williams
Zanussi
Zoppas

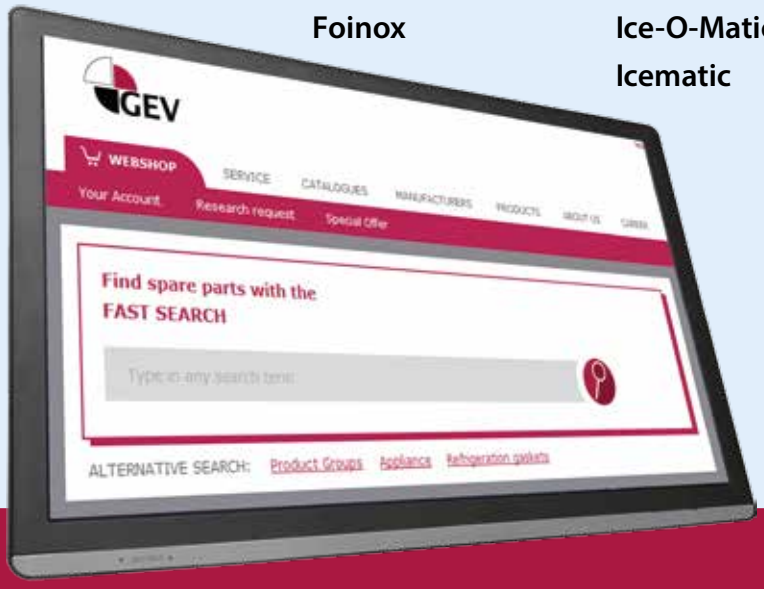

You can find the complete range in the GEV Webshop under "Refrigeration"