Top sellers

- Macchine caffè
- Coffee machines
- Kaffeemaschinen
- Máquinas de café

2018

The most extensive offer of

spare parts for:

- Coffee machines
- Barista tools

Costruttori
Manufacturers
Hersteller
Fabricantes

Anfim
Ars-Invensys
Asso Coffee
Astoria Cma
Azkoyen
Bezzera
Bfc
Bianchi
Bores
Brasilia
Brita
Brugnetti-Aurora
Bwt Water+More
Carimali
Casadio
Ceado
Ceme
Cimbali
Compak
Concept-Art
Conti
Cunill
Dalla Corte
Delonghi
Didiesse
Ecm
Ecm Manufacture
Elektra
Eureka
Everpure
Expobar
Faema
Fiamma RST
Fiorenzato C.S.
Fiorenzato M.C.
Fluid O Tech
Fracino
Futura
Futurmat-Ariete
Gaggia
Gaggia Spagna
Gicar
Grimac
Gruppo Izzo
Hario
Ims
Isomac
Italcrem
Jura
Krups
Lavazza
Macap
Magister
Mairali
Marcfi-Ancas
Marzocco
Mazzer
Mce
Mia-Compak
Motta
Nuert
Nuova Simonelli
Obel
Ode
Olab
Omnipure
Orchestrale
Parker
Pavoni
Planetary Design
Priolinox
Procon
Profine
Pro-Fondi
Promac
PulyCaff
Quick Mill
Rancilio
Rdl
Reneka
Rossi
Royal
Sab Italia
Saeco
San Marco
Sanremo
Santos
Scala
Spaziale
Spinel
Ulka
Unic
Urnex
Vfa Expres
Vibiemme
Victoria Arduino
Visacrem
Wega

Digital catalogues

an exclusive service always available for you

As well as looking through the search options available in the **Internet shop**, to find an item it is possible to browse online and download these digital catalogues in PDF format

All catalogues always with you, anytime and anywhere…

www.lfspareparts724.com

Sommario
Contents
Inhaltsverzeichnis
Índice

Accessori di complemento	11
Addolcitori e ricambi	15
Attrezzature complete	23
Beccucci di erogazione caffè	39
Bilance digitali	45
Caldaie	47
Cappuccinatori	52
Cassetti	54
Centraline elettroniche	59
Commutatori	72
Contatori volumetrici	84
Contenitori caffè	87
Contenitori sottovuoto	120
Cucchiai dosacaffè	122
Detergenti	123
Diffusori portadoccia	129
Docce erogazione gruppo caffè	140
Elettropompe	184
Elettrovalvole	185
Filtri caffè	199
Filtri carta a cesto	250
Filtri depurazione	251
Gommini protezione tubi vapore-acqua	258
Gruppi caffè	259
Guarnizioni	293
Guarnizioni a labbro	314
Guarnizioni gruppo macchine caffè	324
Guarnizioni O-Ring e ORM	335
Guarnizioni per vetri livello	348
Guarnizioni portafiltro	350
Indicatori di livello	372
Interruttori	377
Lattiere	418
Macine	423
Manometri	469
Manopole	490
Manopole portafiltro	521
Molle	533
Molle fermafiltro	560
Motori	561
Perni	572
Pompe vibrazione	594
Pompe volumetriche	600
Portafiltri macchine caffè	604
Pressini	633
Pressostati	646
Raccordi	649
Regolatori di livello	668
Resistenze	680
Rubinetti di carico acqua	754
Rubinetti vapore e ricambi per caffè	767
Scambiatori di calore	795
Schede elettroniche	797
Sonde di livello	804
Spazzolini	817
Spessori carta	819
Spruzzatori gruppi caffè	820
Strumenti di misura	823
Termostati	824
Termostati a contatto	827
Tubi carico	839
Tubi scarico	842
Tubi vapore-acqua macchine caffè	843
Utensili	870
Valvole a sfera e accessori	870
Valvole di espansione e di non ritorno	871
Valvole sicurezza boiler	887

Ball valves and accessories	870
Basket paper filters	250
Boiler safety valves	887
Boilers	47
Booster pumps	600
Brushes	817
Cappuccino makers - Cappuccinatore	52
Coffee filters	199
Coffee groups	259
Coffee measuring spoons	122
Complement accessories	11
Contact thermostats	827
Containers for coffee	87
Detergents	123
Digital scales	45
Drain hoses	842
Drawers	54
Electronic boxes	59
Electronic printed-circuit boards	797
Equipment# complete	23
Filter holder gaskets	350
Filter holders for coffee machines	604
Filter locking springs	560
Fittings	649
Flowmeters	84
Gaskets and seals	293
Gaskets for coffee group	324
Grinders	423
Handles for filterholder	521
Heat exchangers	795
Heating elements	680
Inlet hoses	839
Knobs	490
Level gauges	372
Level regulators	668
Level sensors	804
Lip seals	314
Measuring tools	823
Milk pitchers	418
Motors	561
Non-return and expansion valves	871
Nozzles for coffee groups	820
O-Ring and ORM gaskets	335
Paper seals	819
Pins	572
Pressure gauges	469
Pressure switches	646
Pump motors	184
Rotary switches	72
Rubberpieces for steam-water taps	258
Seals for level glasses	348
Shower screens for brew group	140
Showerholder diffusers	129
Solenoid valves	185
Spouts for coffee	39
Springs	533
Steam taps and spares for coffee mach.	767
Steam-water pipes coffee machines	843
Switches	377
Tampers for coffee	633
Thermostats	824
Tools	870
Vacuum food containers	120
Vibrating pumps	594
Water filling taps	754
Water purification filters	251
Water softeners and accessories	15

Ablaufschläuche	842
Anlegethermostate	827
Anschlüsse	649
Auslaufduschen für Kaffeegruppen	140
Auslaufdüsen für Kaffee	39
Bürsten	817
Dampfhähne & Kaffeeersatzteile	767
Dichtungen	293
Dichtungen für Kaffeemaschinengruppe	324
Dichtungen-Papier	819
Digitalwaagen	45
Drehknöpfe	490
Drehschalter	72
Düsen für Kaffeegruppen	820
Elektronik Platinen	797
Elektronik-Boxen	59
Enthärter und Zubehör	15
Erhitzer - Thermoblock	47
Federn	533
Filterhalterungsfedern	560
Füllstandanzeiger	372
Griffe für Siebträger	521
Heizkörper	680
Kaffeebehälter	87
Kaffeefilter	199
Kaffeegruppen	259
Komplettgeräte	23
Kugelhähne und Zubehör	870
Lippendichtungen	314
Magnetventile	185
Mahlscheiben - Mahlwerke	423
Manometer	469
Messinstrumente	823
Messlöffel für Kaffee	122
Milchaufschäumer	52
Milchgiesser	418
Motoren	561
Niveauelektroden-Systeme	804
Niveauglasdichtungen	348
Niveauregler	668
O-Ring und ORM Dichtungen	335
Papierfilter korbförmig	250
Pressostate	646
Pumpen	184
Pumpen für Kaffeemaschinen	600
Reinigungsmittel	123
Rückschlag- und Expansionsventile	871
Schalter	377
Schublade	54
Schutzhüllen für Dampfwasserleitungen	258
Sicherheitsventile für Boiler	887
Siebträger für Kaffeemaschinen	604
Siebträgerdichtungen	350
Sonstiges Zubehör	11
Stifte	572
Tamper	633
Thermostate	824
Utensilien	870
Vakuumierbehälter	120
Vibrationspumpen	594
Volumenzähler	84
Wärmetauscher	795
Wasser/Dampfrohre f. Kaffeemaschinen	843
Wassereinlaufhähne	754
Wasserfilter	251
Wasserverteiler für Duschhalter	129
Zulaufschläuche	839

Accesorios y complementos	11
Balanzas digitales	45
Bocas salida café	39
Bombas vibratorias	594
Bombas volumétricas	600
Cajones	54
Calderines	47
Capuchinadores	52
Cepillos	817
Colectores electrónicos	59
Conmutadores	72
Contadores volumétricos	84
Contenedores al vacío	120
Contenedores para café	87
Cucharas dosificadores café	122
Depuradores y repuestos	15
Detergentes	123
Difusores portaduchas	129
Duchas erogación grupo café	140
Electrobombas	184
Electroválvulas	185
Equipos completos	23
Filtros café	199
Filtros depuración	251
Filtros papel	250
Fresas	423
Gomas protección tubos vapor-agua	258
Grifos entrada agua	754
Grifos vapor y recambios para café	767
Grupos café	259
Indicadores de nivél	372
Instrumentos de medida	823
Intercambiadores de calor	795
Interruptores	377
Inyectores grupos café	820
Juntas	293
Juntas de labio	314
Juntas de papel	819
Juntas grupos máquinas de café	324
Juntas O-Ring y ORM	335
Juntas para cristales nivél	348
Juntas portafiltro	350
Lecheras	418
Mandos portafiltro	521
Mandos y tiradores	490
Manómetros	469
Motores	561
Muelles	533
Muelles portafiltro	560
Pernos	572
Portafiltros máquinas café	604
Prensas café	633
Presostatos	646
Racores	649
Reguladores de nivél	668
Resistencias	680
Sondas de nivél	804
Tarjetas electrónicas	797
Termostatos	824
Termostatos de contacto	827
Tubos de entrada	839
Tubos desagüe	842
Tubos vapor-agua máquinas de café	843
Utensilios	870
Válvulas de esfera y accesorios	870
Válvulas de retención y de expansión	871
Válvulas seguridad caldera	887

Indice Fotografico
Photographic index
Fotographisches Verzeichnis
Índice fotográfico

Pagina • Page • Seite • Página

11
Accessori di complemento
Complement accessories
Sonstiges Zubehör
Accesorios y complementos

15
Addolcitori e ricambi
Water softeners and accessories
Enthärter und Zubehör
Depuradores y repuestos

23
Attrezzature complete
Equipment, complete
Komplettgeräte
Equipos completos

39
Beccucci di erogazione caffè
Spouts for coffee
Auslaufdüsen für Kaffee
Bocas salida café

45
Bilance digitali
Digital scales
Digitalwaagen
Balanzas digitales

47
Caldaie
Boilers
Erhitzer - Thermoblock
Calderines

52
Cappuccinatori
Cappuccino makers - Cappuccinatore
Milchaufschäumer
Capuchinadores

Pagina • Page • Seite • Página

54
Cassetti
Drawers
Schublade
Cajones

59
Centraline elettroniche
Electronic boxes
Elektronik-Boxen
Colectores electrónicos

72
Commutatori
Rotary switches
Drehschalter
Conmutadores

84
Contatori volumetrici
Flowmeters
Volumenzähler
Contadores volumétricos

87
Contenitori caffè
Containers for coffee
Kaffeebehälter
Contenedores para café

120
Contenitori sottovuoto
Vacuum food containers
Vakuumierbehälter
Contenedores al vacío

122
Cucchiai dosacaffè
Coffee measuring spoons
Messlöffel für Kaffee
Cucharas dosificadores café

Indice Fotografico
Photographic index
Fotographisches Verzeichnis
Índice fotográfico

Pagina • Page • Seite • Página

123
Detergenti
Detergents
Reinigungsmittel
Detergentes

129
Diffusori portadoccia
Showerholder diffusers
Wasserverteiler für Duschhalter
Difusores portaduchas

140
Docce erogazione gruppo caffè
Shower screens for brew group
Auslaufduschen für Kaffeegruppen
Duchas erogación grupo café

184
Elettropompe
Pump motors
Pumpen
Electrobombas

185
Elettrovalvole
Solenoid valves
Magnetventile
Electroválvulas

199
Filtri caffè
Coffee filters
Kaffeefilter
Filtros café

250
Filtri carta a cesto
Basket paper filters
Papierfilter korbförmig
Filtros papel

Pagina • Page • Seite • Página

251
Filtri depurazione
Water purification filters
Wasserfilter
Filtros depuración

258
Gommini protezione tubi vapore-acqua
Rubberpieces for steam-water taps
Schutzhüllen für Dampfwasserleitungen
Gomas protección tubos vapor-agua

259
Gruppi caffè
Coffee groups
Kaffeegruppen
Grupos café

293
Guarnizioni
Gaskets and seals
Dichtungen
Juntas

314
Guarnizioni a labbro
Lip seals
Lippendichtungen
Juntas de labio

324
Guarnizioni gruppo macchine caffè
Gaskets for coffee group
Dichtungen für Kaffeemaschinengruppe
Juntas grupos máquinas de café

335 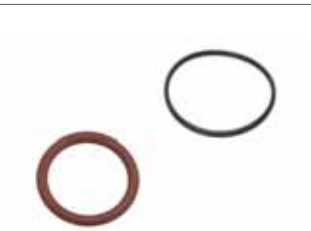
Guarnizioni O-Ring e ORM
O-Ring and ORM gaskets
O-Ring und ORM Dichtungen
Juntas O-Ring y ORM

Indice Fotografico
Photographic index
Fotographisches Verzeichnis
Índice fotográfico

Pagina • Page • Seite • Página

348
Guarnizioni per vetri livello
Seals for level glasses
Niveauglasdichtungen
Juntas para cristales nivél

350
Guarnizioni portafiltro
Filter holder gaskets
Siebträgerdichtungen
Juntas portafiltro

372
Indicatori di livello
Level gauges
Füllstandanzeiger
Indicadores de nivél

377
Interruttori
Switches
Schalter
Interruptores

418
Lattiere
Milk pitchers
Milchgiesser
Lecheras

423
Macine
Grinders
Mahlscheiben - Mahlwerke
Fresas

469
Manometri
Pressure gauges
Manometer
Manómetros

Pagina • Page • Seite • Página

490
Manopole
Knobs
Drehknöpfe
Mandos y tiradores

521
Manopole portafiltro
Handles for filterholder
Griffe für Siebträger
Mandos portafiltro

533
Molle
Springs
Federn
Muelles

560 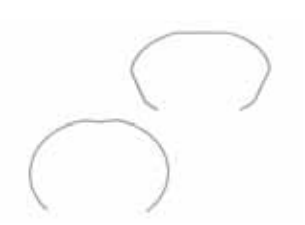
Molle fermafiltro
Filter locking springs
Filterhalterungsfedern
Muelles portafiltro

561
Motori
Motors
Motoren
Motores

572
Perni
Pins
Stifte
Pernos

594
Pompe vibrazione
Vibrating pumps
Vibrationspumpen
Bombas vibratorias

Indice Fotografico
Photographic index
Fotographisches Verzeichnis
Índice fotográfico

Pagina • Page • Seite • Página

600
Pompe volumetriche
Booster pumps
Pumpen für Kaffeemaschinen
Bombas volumétricas

604
Portafiltri macchine caffè
Filter holders for coffee machines
Siebträger für Kaffeemaschinen
Portafiltros máquinas café

633
Pressini
Tampers for coffee
Tamper
Prensas café

646
Pressostati
Pressure switches
Pressostate
Presostatos

649
Raccordi
Fittings
Anschlüsse
Racores

668
Regolatori di livello
Level regulators
Niveauregler
Reguladores de nivél

680
Resistenze
Heating elements
Heizkörper
Resistencias

Pagina • Page • Seite • Página

754
Rubinetti di carico acqua
Water filling taps
Wassereinlaufhähne
Grifos entrada agua

767
Rubinetti vapore e ricambi per caffè
Steam taps and spares for coffee mach.
Dampfhähne & Kaffeeersatzteile
Grifos vapor y recambios para café

795
Scambiatori di calore
Heat exchangers
Wärmetauscher
Intercambiadores de calor

797
Schede elettroniche
Electronic printed-circuit boards
Elektronik Platinen
Tarjetas electrónicas

804
Sonde di livello
Level sensors
Niveauelektroden-Systeme
Sondas de nivél

817
Spazzolini
Brushes
Bürsten
Cepillos

819
Spessori carta
Paper seals
Dichtungen-Papier
Juntas de papel

Indice Fotografico
Photographic index
Fotographisches Verzeichnis
Índice fotográfico

Pagina • Page • Seite • Página

820
Spruzzatori gruppi caffè
Nozzles for coffee groups
Düsen für Kaffeegruppen
Inyectores grupos café

823
Strumenti di misura
Measuring tools
Messinstrumente
Instrumentos de medida

824
Termostati
Thermostats
Thermostate
Termostatos

827
Termostati a contatto
Contact thermostats
Anlegethermostate
Termostatos de contacto

839
Tubi carico
Inlet hoses
Zulaufschläuche
Tubos de entrada

842
Tubi scarico
Drain hoses
Ablaufschläuche
Tubos desagüe

Pagina • Page • Seite • Página

843
Tubi vapore-acqua macchine caffè
Steam-water pipes coffee machines
Wasser/Dampfrohre für Kaffeemaschinen
Tubos vapor-agua máquinas de café

870
Utensili
Tools
Utensilien
Utensilios

870
Valvole a sfera e accessori
Ball valves and accessories
Kugelhähne und Zubehör
Válvulas de esfera y accesorios

871
Valvole di espansione e di non ritorno
Non-return and expansion valves
Rückschlag- und Expansionsventile
Válvulas de retención y de expansión

887
Valvole sicurezza boiler
Boiler safety valves
Sicherheitsventile für Boiler
Válvulas seguridad caldera

ACCESSORI MOTTA
ACCESSORIES MOTTA
ZUBEHÖR MOTTA
ACCESORIOS MOTTA

1

2

3

4

5

Photo	LF Code	Notes	Description
1	**1494004**	230x170 mm	TRAY FOR ESPRESSO STAINL. STEEL - VASSOIO INOX
2	**1494003**	ø 140x100 mm	CAKE STAND STAINL. STEEL - ALZATINA PASTICCERIA INOX
3	**5064220**	ø 113x125 mm	STRAW HOLDER STAINLESS STEEL - PORTACANNUCCE INOX
4	**5064221**	ø 90x100 mm	TEA SPOON HOLDER STAINL. STEEL - PORTACUCCHIAINI INOX
5	**1494002**	267x96x116 mm	TEASPOON HOLDER 3 PIECES WITH BASE - PORTACUCCHIAINI 3 PEZZI CON BASE

ACCESSORI MOTTA
ACCESSORIES MOTTA
ZUBEHÖR MOTTA
ACCESORIOS MOTTA

1

2

3

4

5

Photo	LF Code	Notes	Description
1	**1494007**	ø 195x75 mm	SUGAR PACKETS HOLDER STAINL. STEEL - PORTA BUSTINE INOX
2	**5064218**	ø 220x78 mm	SUGAR PACKETS HOLDER STAINL. STEEL - PORTA BUSTINE INOX
3	**5064219**	90x120xh135 mm	NAPKIN HOLDER STAINL. STEEL - PORTATOVAGLIOLI INOX
4	**1494006**	220 mm	PLIERS FOR SWEETS STAINL. STEEL - MOLLA PER DOLCI INOX
5	**1494005**	180x42 mm	PROFESSIONAL BOTTLE OPENER STAINL. STEEL - APRIBOTTIGLIA INOX

STRUMENTI PER COCKTAIL MOTTA
COCKTAIL TOOLS MOTTA
COCKTAIL WERKZEUGE MOTTA
HERRAMIENTAS PARA COCKTAIL MOTTA

1 2

3

4

5

6

Photo	LF Code	Description
1	**1080164**	SHAKER BOSTON
2	**1080165**	GLASS BOSTON
3	**1080166**	FILTER BOSTON
4	**1069004**	MIXER
5	**1080167**	COCKTAIL MEASURING
6	**1094005**	ICE PALLET

BICCHIERI GRADUATI
MEASURING JUGS
MESSBECHER
TAZAS MEDIDORAS

1

2

Photo	LF Code	Description
1	**1080200**	15/22/30/45/60 ml - 0.5/0.75/1.0/1.5/2.0 oz
2	**5056299**	22/30/44/60 ml - 0.75/1.0/1.5/2.0 oz

Personalizzabili
Customizable
personalisierbar
Personalizables

CUCCHIAI DOSACAFFE'
COFFEE DOSERS SPOONS
KAFFEEDOSIERLÖFFEL
CUCHARAS DOSIFICADORES CAFE

1

2

3

Photo	LF Code	Material	Capacity
1	**1069001**	PLASTIC	20 ml
2	**1069002**	STAINLESS STEEL - INOX	20 ml
3	**1394720**	STAINLESS STEEL - INOX	365 ml

DISPENSER LATTE ART
LATTE ART BOTTLES
LATTE ART FLASCHEN
BOTELLAS PARA LATTE ART

1

2

Photo	LF Code	Capacity
1	**1394009**	236 ml
2	**1394703**	30 ml

PENNE LATTE ART
FEATHERS LATTE ART
STIFTE LATTE ART
UTENSILIOS LATTE ART

1 2 3 4 5

Photo	LF Code	Description
1	**1394701**	ALUMINIUM MILK FEATHER ART - PENNA LATTE ART IN ALLUMINIO
2	**1394702**	ALUMINIUM MILK FEATHER ART KIT - SET PENNE LATTE ART IN ALLUMINIO
3	**1394005**	STAINLESS STEEL MILK PEN - PENNA LATTE IN ACCIAIO INOX
4	**1394006**	STAINLESS STEEL MILK PEN BLUE GRIP - PENNA LATTE INOX
5	**1394007**	STAINLESS STEEL MILK PEN RED GRIP - PENNA LATTE INOX

SPOLVERATORI CACAO
COCOA DUSTERS
KAKAOSTREUER
ESPOLVOREADORES CACAO

1 2 3 4

Photo	LF Code	Description
1	**1094003**	STAINLESS STEEL - INOX
2	**1094906**	STAINLESS STEEL - INOX
3	**1094905**	STAINLESS STEEL - INOX
4	**1094004**	STAINLESS STEEL - INOX

TAPPETINI APPOGGIO PRESSINO/PORTAFILTRO
FILTER HOLDER/TAMPER MATS
STÜTZTEPPICHE TAMPER/SIEBTRÄGER
TEJIDOS APOYO PRENSA/PORTAFILTRO

1 - 170x140x37 mm 2 - 238x160x48 mm 3 - 200x150x45 mm

Photo	LF Code	Description	Dimensions	Material
1	**1385779**	BLACK MAT - TAPPETINO APPOGGIO NERO	170x140x37 mm	SILICON RUBBER - GOMMA SILICONICA
2	**1385734**	BLACK MAT - TAPPETINO APPOGGIO NERO	238x160x48 mm	SILICON RUBBER - GOMMA SILICONICA
3	**1385778**	BLACK MAT - TAPPETINO APPOGGIO NERO	200x150x45 mm	SILICON RUBBER - GOMMA SILICONICA

Personalizzabili
Customizable
personalisierbar
Personalizables

TAPPETINI APPOGGIO PRESSINO/PORTAFILTRO
FILTER HOLDER/TAMPER MATS
STÜTZTEPPICHE TAMPER/SIEBTRÄGER
TEJIDOS APOYO PRENSA/PORTAFILTRO

1 - 220x170 mm | 2 - 200x150 mm | 3 - 200x150 mm | 4 - 200x150 mm | 5 - 200x150 mm

Photo	LF Code	Description	Dimensions	Material
1	**1385775**	BLACK MAT - TAPPETINO APPOGGIO NERO	220x170 mm	SILICON RUBBER - GOMMA SILICONICA
2	**1385780**	PINK MAT - TAPPETINO APPOGGIO ROSA	200x150 mm	SILICON RUBBER - GOMMA SILICONICA
3	**1385781**	ORANGE MAT - TAPPETINO APPOGGIO ARANCIONE	200x150 mm	SILICON RUBBER - GOMMA SILICONICA
4	**1385782**	GREEN MAT - TAPPETINO APPOGGIO VERDE	200x150 mm	SILICON RUBBER - GOMMA SILICONICA
5	**1385783**	BLUE MAT - TAPPETINO APPOGGIO AZZURRO	200x150 mm	SILICON RUBBER - GOMMA SILICONICA

Personalizzabili
Customizable
personalisierbar
Personalizables

TERMOMETRI PER LATTIERE
THERMOMETERS FOR MILK JUGS
THERMOMETER FÜR MILCHGIESSER
TERMÓMETROS PARA JARRAS LECHERAS

1

2

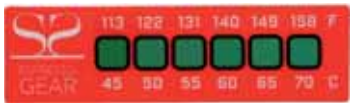

3

Photo	LF Code	Dimensions (mm)	Temperature range (°C)
1	**1394553**	ø 25	0+100
2	**1394554**	ø 45	0+100
3	**1394004**	---	45+70

1 E 2 Personalizzabili
1 AND 2 Customizable
1 UND 2 personalisierbar
1 Y 2 Personalizables

ADDOLCITORI HO.RE.CA.-OCS
WATER SOFTENERS HO.RE.CA.-OCS
WASSERENTHÄRTER HO.RE.CA.-OCS
DEPURADORES HO.RE.CA.-OCS

1

2

3

4

5

Photo	LF Code	Model	Suitable for	For machine model
1	**1160082**	---	DELONGHI 5513292811	BCO410 - BCO420 - ECAM21 - ECAM22 - ECAM23 - ECAM24
2	**3010274**	AQUA AROMA CREMA	LAVAZZA	EL3100 - EP101 - EP1800 - EP3200 - EP4100 - EP850 - EP950
3	**3010280**	AQUA AROMA CREMA + ADAPTER	LAVAZZA	MATINEE - PININFARINA
4	**5050501**	INTENZA	GAGGIA	BRERA
4	**5050501**	INTENZA	LAVAZZA	A MODO MIO
4	**5050501**	INTENZA	SAECO	EXPRELIA - INCANTO - INTELIA - MAGIC - NINA - ODEA
5	**3010289**	CLARIS WHITE	JURA 60355	JURA

ADDOLCITORI HO.RE.CA.-OCS BILT
WATER SOFTENERS HO.RE.CA.-OCS BILT
WASSERENTHÄRTER HO.RE.CA.-OCS BILT
DEPURADORES HO.RE.CA.-OCS BILT

1

2

3

Photo	LF Code	Model	Dimensions (mm)	Autonomy at 27°f
1	**3010410**	NICAL MX	ø 75.5x74	300 L
2	**3010411**	NICAL MIDI	ø 75.5x74	100 L
3	**3010402**	OSCAR 60	120x100	75 L
3	**3010202**	OSCAR 90	120x100	150 L
3	**3010215**	OSCAR 150	150x100	275 L
3	**3010217**	OSCAR 300	250x100	550 L

ADDOLCITORI HO.RE.CA.-OCS BILT
WATER SOFTENERS HO.RE.CA.-OCS BILT
WASSERENTHÄRTER HO.RE.CA.-OCS BILT
DEPURADORES HO.RE.CA.-OCS BILT

1 - ø 40,5x80

2 - ø 40,5x120

3 - ø 40,5x80

4 - ø 40,5x120

Photo	LF Code	Model	Dimensions (mm)	Autonomy at 27°f
1	**3010226**	NICAL 450	ø 40,5x80	50 L
2	**3010231**	NICAL 900	ø 40,5x120	100 L
3	**3010303**	NICAL 125	ø 40,5x80	16 L
4	**3010307**	NICAL 250	ø 40,5x120	30 L

ADDOLCITORI HO.RE.CA.-OCS BRITA
WATER SOFTNERS HO.RE.CA.-OCS BRITA
WASSERENTHÄRTER HO.RE.CA.-OCS BRITA
DEPURADORES HO.RE.CA.-OCS BRITA

1

2

Photo	LF Code	Model	Autonomy at 18°f
1	**3010287**	AQUAGUSTO 100	100 L
2	**3010288**	AQUAGUSTO 250	250 L

ADDOLCITORI HO.RE.CA.-OCS WATER+MORE
SOFTENERS HO.RE.CA.-OCS WATER+MORE
WEICHMACHUNGSMITTEL HO.RE.CA.-OCS WATER+MORE
SUAVIZADORES HO.RE.CA.-OCS WATER+MORE

1

2

3

Photo	LF Code	Model	Autonomy at 10°Kh
1	**3010709**	BESTSAVE S	85 L
2	**3010710**	BESTSAVE M	100 L
3	**3010711**	BESTSAVE L	200 L

ADDOLCITORI AUTOMATICI BORES
AUTOMATIC WATER SOFTENERS BORES
WASSERENTHÄRTER AUTOMATISCH BORES
DEPURADORES AUTOMÁTICOS BORES

LF Code	Capacity (L)	Connections (ø)	Head	Width (mm)	Depth (mm)	Overall h (mm)	Resin content (L)
3010146	8	3/4	ELECTRONIC	230	435	510	5.5
3010149	12	3/4	ELECTRONIC	310	500	610	9
3010155	20	3/4	ELECTRONIC	380	410	1130	18

RICAMBI PER ADDOLCITORI AUTOMATICI BORES
SPARE PARTS FOR AUTOMATIC WATER SOFTENERS BORES
ERSATZTEILE FÜR WASSERENTHÄRTER AUTOMATISCH BORES
RECAMBIOS PARA DEPURADORES AUTOMÁTICOS BORES

LF Code	Notes
3010112	5 L
3010266	8 L
3010267	25 L
3010300	SALT - SALE 25 Kg
3010299	SALT - SALE 10 Kg

ADDOLCITORI AUTOMATICI LF
AUTOMATIC WATER SOFTENERS LF
WASSERENTHÄRTER AUTOMATISCH LF
DEPURADORES AUTOMÁTICOS LF

1

2

3

4

Photo	LF Code	Capacity (L)	Connections (ø)	AUTOTROL head	Width (mm)	Depth (mm)	Overall h (mm)	Resin content (L)
1	**3010260**	5	3/4	255/460TC 230V 50Hz	165	325	530	4
1	**3010074**	8	3/4	255/460TC 230V 50Hz	200	430	550	5.4
1	**3010094**	12	3/4	255/460TC 230V 50Hz	260	480	650	8
2	**3010259**	5	3/4	366/604 230V 50/60Hz	165	325	415	4
2	**3010241**	8	3/4	366/604 230V 50/60Hz	225	375	415	5.4
2	**3010242**	12	3/4	366/604 230V 50/60Hz	260	450	440	5.6
3	**3010243**	8	3/4	255 230V 50/60Hz	200	410	540	5.6
3	**3010244**	12	3/4	255 230V 50/60Hz	260	475	650	8.4
4	**3010098**	16	3/4	255/460TC 230V 50Hz	325	505	645	10.5
4	**3010099**	20	3/4	255/460TC 230V 50Hz	325	505	1100	13

RICAMBI PER ADDOLCITORI AUTOMATICI LF
SPARES FOR AUTOMATIC WATER SOFTENERS LF
ERSATZTEILE FÜR WASSERENTHÄRTER AUTOMATISCH LF
RECAMBIOS DEPURADORES AUTOMÁTICOS LF

1

2

3

4

5

6

Photo	LF Code	Notes
1	**3010275**	AUTOTROL 255/460TC
1	**3010034**	AUTOTROL 255/440i
2	**3010043**	AUTOTROL 255/440i
3	**3010046**	AUTOTROL 255/440i
4	**3010120**	AUTOTROL 255/440i
5	**3010121**	AUTOTROL 255/440i
6	**3010130**	AUTOTROL 255/440i

RICAMBI PER ADDOLCITORI AUTOMATICI LF
SPARES FOR AUTOMATIC WATER SOFTENERS LF
ERSATZTEILE FÜR WASSERENTHÄRTER AUTOMATISCH LF
RECAMBIOS DEPURADORES AUTOMÁTICOS LF

1

2

3

4

5

6

Photo	LF Code	Notes
1	**3010126**	AUTOTROL 255/400i-450
2	**3010127**	AUTOTROL 255/440i
3	**3010200**	220/12V
4	**3010245**	KIT DISINFECTION - KIT DISINFEZIONE
5	**3010300**	SALT - SALE 25 Kg
5	**3010299**	SALT - SALE 10 Kg
6	**3010112**	5 L
6	**3010266**	8 L
6	**3010267**	25 L

ADDOLCITORI VOLUMETRICI MONOBLOCCO
VOLUMETRIC WATER SOFTENERS COMPACT
WASSERENTHÄRTER VOLUMETRISCH KOMPAKT
DEPURADORES VOLUMÉTRICOS MONOBLOQUE

LF Code	Capacity (L)	Connections (ø)	Head	Width (mm)	Depth (mm)	Overall h (mm)	Resin content (L)
3010087	11,4	---	VALVOLA FLECK - BY-PASS	300	430	660	8
3010088	14,4	---	VALVOLA FLECK - BY-PASS	300	430	1010	12
3010089	20,4	---	VALVOLA FLECK - BY-PASS	320	430	1120	16
3010093	32,5	---	VALVOLA FLECK - BY-PASS	320	430	1120	25

ADDOLCITORI MANUALI DVA
MANUAL WATER SOFTENERS DVA
WASSERENTHÄRTER MANUELL DVA
DEPURADORES MANUALES DVA

1

2

Photo	LF Code	Capacity (L)	Connections (ø)	Diameter (mm)	Height (mm)	Resin content (L)
1	**3010001**	8	3/8	185	400	5.8
1	**3010002**	12	3/8	185	500	9
1	**3010003**	16	3/8	185	600	12
1	**3010004**	20	3/8	185	900	15
1	**3010060**	8	3/4	185	400	5.8
1	**3010061**	12	3/4	185	500	9
1	**3010062**	16	3/4	185	600	12
1	**3010063**	20	3/4	185	900	15
2	**3010005**	8	3/8	185	400	5.8
2	**3010006**	12	3/8	185	500	9
2	**3010007**	16	3/8	185	600	12
2	**3010008**	20	3/8	185	900	15

RICAMBI PER ADDOLCITORI MANUALI DVA
SPARES PARTS FOR MANUAL WATER SOFTENERS DVA
ERSATZTEILE FÜR WASSERENTHÄRTER MANUELL DVA
RECAMBIOS PARA DEPURADORES MANUALES DVA

1

2

3

4

5

6

Photo	LF Code	Notes
1	**3010011**	ø 3/8"
1	**3010012**	ø 3/4"
2	**3010015**	---
3	**3010014**	ø 3/8"F x 3/4"M
4	**3010016**	M6
5	**3010018**	OLD TYPE - VECCHIO TIPO
5	**3010083**	NEW TYPE - NUOVO TIPO
6	**3010019**	OLD TYPE - VECCHIO TIPO
6	**3010084**	NEW TYPE - NUOVO TIPO

RICAMBI PER ADDOLCITORI MANUALI DVA
SPARES PARTS FOR MANUAL WATER SOFTENERS DVA
ERSATZTEILE FÜR WASSERENTHÄRTER MANUELL DVA
RECAMBIOS PARA DEPURADORES MANUALES DVA

1

2

3

4

5

6

Photo	LF Code	Notes
1	**3010080**	NEW TYPE - NUOVO TIPO
2	**3010021**	IN - ENTRATA
2	**3010022**	OUT - USCITA
3	**3010286**	NEW TYPE BY PASS - BY PASS NUOVO TIPO
4	**3010023**	---
5	**3010112**	5 L
5	**3010266**	8 L
5	**3010267**	25 L
6	**3010300**	SALT - SALE 25 Kg
6	**3010299**	SALT - SALE 10 Kg

ADDOLCITORI MANUALI GS
MANUAL WATER SOFTENERS GS
WASSERENTHÄRTER MANUELL GS
DEPURADORES MANUALES GS

LF Code	Capacity (L)	Connections (ø)	Diameter (mm)	Height (mm)	Resin content (L)
3010095	6	3/8	185	335	4.2
3010161	8	3/8	185	400	5.8
3010162	12	3/8	185	500	9
3010163	16	3/8	185	600	12
3010164	20	3/8	185	900	15
3010101	8	3/4	185	400	5.8
3010102	12	3/4	185	500	9
3010103	16	3/4	185	600	12
3010104	20	3/4	185	900	15

RICAMBI PER ADDOLCITORI MANUALI GS
SPARES FOR MANUAL WATER SOFTENERS GS
ERSATZTEILE FÜR WASSERENTHÄRTER MANUELL GS
RECAMBIOS PARA DEPURADORES MANUALES GS

1

2

3

4

5

6

Photo	LF Code	Notes
1	**3010114**	LID - TAPPO
1	**3010018**	ORING LID
2	**3010111**	ø 3/4"
2	**3010119**	ø 3/8"
3	**3010123**	BASIS - BASE
4	**3010300**	SALT - SALE 25 Kg
4	**3010299**	SALT - SALE 10 Kg
5	**3010112**	5 L
5	**3010266**	8 L
5	**3010267**	25 L
6	**1160005**	WITHOUT RESIN - SENZA RESINA

KIT ANALISI DUREZZA ACQUA
KIT FOR WATER HARDNESS ANALYSIS
KIT ANALYSE WASSERHÄRTE
KIT ANÁLISIS DUREZA AGUA

1

2

3 4

5

6

Photo	LF Code	Hardness analysis
1	**3010128**	TOTAL - TOTALE
2	**3010232**	TOTAL - TOTALE
3	**3394551**	TOTAL - TOTALE
4	**3394552**	CHLORINE - CLORO
5	**3394553**	---
6	**3010285**	TOTAL - TOTALE

ATTREZZATURE COMPLETE - DISSIPATORE ELETTRICO PRO-FONDI
EQUIPMENT, COMPLETE - ELECTRICAL DISPOSER PRO-FONDI
KOMPLETTE EINRICHTUNGEN - ELEKTRISCHE KAFFEESATZBÜRSTE
EQUIPOS COMPLETOS - LIMPIADOR ELÉCTRICO PRO-FONDI

1

Photo	LF Code	Power supply
1	**1480100**	in 100/240V 50/60Hz - out 12VCC

- Ottimizza la pulizia del filtro migliorando il risultato in tazza
- Evita di sporcare la pedana
- Evita la battuta del porta filtro migliorando il comfort acustico del vostro locale
- Evita la sostituzione dei filtri e l'abrasione dei gruppi
- Più veloce della classica battuta
- Evita traumi al braccio e alla spalla
- Raccoglie e smaltisce i fondi in modo igienico
- Non necessita di pulizie e manutenzioni particolari
- Evita l'ingombro del vecchio cassetto verso l'operatore
- Raccoglie grandi quantità di fondi nello stesso sacchetto

- It thoroughly cleans the filter, improving the taste
- No dirt on the floor
- No loud noises with subsequent improvemet of the acoustic environmental comfort
- Less filter replacing and less abrasion of the groups
- Faster filter cleaning
- Less strain on arms and shoulders
- Hygienical procedure
- It does not require special maintenance and cleaning
- No worry about the knockbox becoming full
- One single disposal bag can contain large amounts of waste

- Perfekte Reinigung - kein Geruch
- Kein Schmutz am Fußboden Tisch
- Keine Abschlagkästen, akustischer Komfort für die Gäste
- Filter müssen seltener getauscht werden
- Schneller als ausklopfen und ausspülen
- Nicht körperlich anstrengend
- Hygienische Abfallentsorgung
- Benötigt keine besondere Handhabung oder Pflege
- Keine Behinderung oder Platzbedarf durch Abschlagboxen
- Es sammelt große Mengen Kaffeepulver in einer Tüte

- Optimiza la limpieza del filtro mejorando el resultado en taza
- Evita ensuciar la tarima
- Evita el batido del portafiltro mejorando el confort acústico de su local
- Evita la sustitución de los filtros y la abrasión de los grupos
- Más veloz del clásico batido
- Evita dolores de brazo y espalda
- Recoge y elimina los restos en modo higiénico
- No necesita limpieza y mantenimientos particulares
- Evita la obstrucción del viejo cajón hacia el operador
- Recoge grandes cantidades de restos en el mismo saco

ATTREZZATURE COMPLETE - RICAMBI PER PRO-FONDI
EQUIPMENT, COMPLETE - SPARE PARTS FOR PRO-FONDI
EINRICHTUNGEN - ERSATZTEILE FÜR PRO-FONDI
EQUIPOS COMPLETOS - REPUESTOS PARA PRO-FONDI

1

2

3

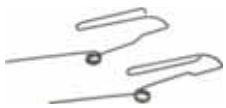

4

Photo	LF Code	Notes
1	**1480101**	ø 57/58 mm
2	**1480102**	ø 53 mm
3	**1480103**	ø 53/57/58 mm
4	**5065655**	KIT

ATTREZZATURE COMPLETE - MACCHINA DA CAFFÈ BACCHI ESPRESSO
EQUIPMENT, COMPLETE - COFFEE MACHINE BACCHI ESPRESSO
KOMPLETTE EINRICHTUNGEN - KAFFEEMASCHINE BACCHI ESPRESSO
EQUIPOS COMPLETOS - MÁQUINA DE CAFÉ BACCHI ESPRESSO

1

Photo	LF Code	Dimensions
1	**1235100**	175x150xh245 mm

La macchina è costruita completamente in alluminio ad uso alimentare con un trattamento protettivo chiamato "anodizzazione", che conferisce alla superficie della macchina le proprietà di: anticorrosione, antigraffiatura, autopulizia, idrorepellenza, durezza e bellezza. Grazie a questo trattamento protettivo e decorativo la macchina manterrà inalterate nel tempo le sue caratteristiche estetiche e funzionali. La macchina per il suo funzionamento non utilizza parti elettromeccaniche (pompe, resistenze, elettrovalvole, ecc) bensì sfrutta un principio fisico di idraulica per raggiungere la necessaria pressione e una raffinata e calibrata conduzione termica per riscaldare l'acqua destinata alla produzione del caffé.
Descrizione: inserire l'acqua e il caffé negli appositi vani e porre la macchina su una fonte di calore (ad esempio un fornello). Dopo alcuni minuti un fischio avvertirà il momento esatto in cui sarà possibile erogare, in una o due tazze, la quantità voluta di caffé espresso all'italiana con abbondante crema

This machine is made of aluminum for domestic use, with a special "anodizing" treatment to provide protection against corrosion and scratches. The Bacchi Espresso machine is self-cleaning, water resistant, has unbeatable strength and unique charm. Thanks to its protective and decorative treatment, this machine will maintain its characteristics throughout the years. This machine does not use electro-mechanical parts to work, such as pumps, heating elements, valves, etc. Instead it is operated on a physical principle of hydraulics to reach the pressure required. It also features an accurately calibrated thermal conduction system to heat water and brew coffee.
Description: pour water and coffee into the specific compartments and put the machine on a heater (i.e. a burner). After a few minutes, a whistle will alert to the right moment for the brewing, in one or two cups, the desired quantity of your Italian style creamy espresso.

Schutz vor Korrosion und Kratzern, selbstreinigend, Wasserabweisend, Kraftvoll und Charmant: diese Haushalts-Maschine besteht aus Aluminium mit einer speziell eloxierten Oberfläche, die der Maschine einen tollen Auftritt verleiht. Dank dieser schützenden Oberfläche wird diese Maschine über Jahre hinweg unverändert gut aussehen. Außerdem verwendet diese Maschine keine elektrischen Teile (Pumpen, Heizkörper, Ventile, etc.) denn sie nutzt das physikalische Prinzip der Hydraulik um den erforderlichen Brühdruck und die Temperatur zu erzeugen.
Beschreibung: Wasser und Kaffee in die dafür vorgesehenen Behälter füllen und die Maschine auf den Herd stellen. Nach kurzer Zeit gibt ein Pfeifton das Startsignal, um die gewünschte Menge cremigen italienischen Espresso in eine oder zwei Tassen zu brühen.

La máquina está construida completamente en aluminio para uso alimentario con un tratamiento protector llamado "anodización", que confiere a la superficie de la máquina las siguientes propiedades: anticorrosión, antirayaduras, autolimpieza, hidrófugo, dureza y belleza. Gracias a este tratamiento protector y decorativo la máquina mantendrá inalteradas en el tiempo sus características estéticas y funcionales. La máquina no utiliza para su funcionamiento partes electromecánicas (bombas, resistencias, electroválvulas, etc.); de hecho explota un principio físico de hidráulica para reunir la necesaria presión y una refinada y calibrada conducción térmica para calentar el agua destinada a la producción de café.
Descripción: Insertar el agua y el café en los correspondientes vanos y poner la máquina sobre una fuente de calor (como ejemplo un hornillo), después de algunos minutos un pitido advertirá el momento exacto en el cual será posible erogar, en una o dos tazas, la cantidad querida de café espresso a la italiana con abundante crema.

ATTREZZATURE COMPLETE - MACCHINA DA CAFFÈ PAVONI EUROPICCOLA LUSSO
EQUIPMENT, COMPLETE - COFFEE MACHINE PAVONI EUROPICCOLA LUSSO
KOMPLETTE EINRICHTUNGEN - KAFFEEMASCHINE PAVONI EUROPICCOLA LUSSO
EQUIPOS COMPLETOS - MÁQUINA DE CAFÉ PAVONI EUROPICCOLA LUSSO

la Pavoni

Top Quality

1

1

100% MADE IN ITALY

Photo	LF Code	Power supply	Dimensions
1	**1235200**	220/240V 50/60Hz 950W	200x290xH330 mm

Europiccola, disegnata nel lontano 1950, è un prodotto che riflette uno spaccato della storia italiana del design.
È la macchina a leva che non conosce mode. Costruita con materiali pregiati, non teme le incrostazioni di calcare, limitando gli interventi di manutenzione ordinaria. Il modello Europiccola permette di ottenere 8 tazze di caffè espresso consecutivamente.

La Pavoni Europiccola, designed back in 1950, is a symbol par excellence of Italian design with its classic, timeless design.
Europiccola is mainly made of solid cast brass and it is built to last. Its large boiler ensures that limescale deposits have minimal effect, meaning little to none maintenance.
Europiccola delivers up to 8 cups of espresso continuously.

Europiccola, deren Design auf das ferne 1950 zurückgeht, ist ein Erzeugnis, der einen Querschnitt durch die italienische Designgeschichte verkörpert.
Diese Handhebelmaschine liegt immer in Trend. Zur Konstruktion dieses Gerätes werden hochwertige Materialien verwendet, dadurch wird die Anfälligkeit für Verkalkungen reduziert und eine Langlebigkeit des Gerätes garantiert. Das Modell Europiccola hat eine Boilerkapazität für die Vorbereitung von 8 Espresso-Tassen hintereinander.

Europiccola, diseñada en 1950, es un producto que refleja la historia italiana del design.
Es la máquina de palanca que no conoce modas. Realizada con materiales de calidad, no teme a la calcificación, limitando las intervenciones de manutención ordinaria.
El modelo Europiccola permite obtener 8 tazas de café espresso consecutivamente.

ATTREZZATURE COMPLETE - MACINACAFFÈ BARATZA
COMPLETE EQUIPMENT - COFFEE GRINDERS BARATZA
KOMPLETTE EINRICHTUNGEN - KAFFEEMÜHLEN BARATZA
EQUIPOS COMPLETOS - MOLINOS CAFÉ BARATZA

BARATZA

1

2

3

Photo	LF Code	Model	Grinding burrs (ø)	Coffee bean capacity (g)	Power supply	Dimensions (mm)
1	**1252474**	VIRTUOSO ON DEMAND	40	220	230V 50/60Hz	120x160x350
2	**1252475**	ENCORE ON DEMAND	40	220	230V 50/60Hz	120x160x350
3	**1252477**	ACCESSORY - ACCESSORIO	---	---	---	---

ATTREZZATURE COMPLETE - MACINACAFFÈ CUNILL
COMPLETE EQUIPMENT - COFFEE GRINDERS CUNILL
KOMPLETTE EINRICHTUNGEN - KAFFEEMÜHLEN CUNILL
EQUIPOS COMPLETOS - MOLINOS CAFÉ CUNILL

1

2

3

4

5

6

Photo	LF Code	Model	Grinding burrs (ø)	Coffee bean capacity (g)	Power supply	Dimensions (mm)
1	**1252380**	EL CAFE TRANQUILO 02	60	500	230V 50Hz	170x340x410
2	**1235124**	BRASIL	60	1000	230V 50Hz	210x390x470
3	**1235126**	KENIA	60	1000	230V 50Hz	210x380x510
4	**1235125**	MARFIL	60	2000	230V 50Hz	210x380x600
5	**1252015**	EL CAFE TRANQUILO 01	60	500	230V 50Hz	170x340x410
6	**1235127**	EL CAFE TRANQUILO TRON	60	500	230V 50Hz	170x340x410

ATTREZZATURE COMPLETE - MACINACAFFÈ FIORENZATO
COMPLETE EQUIPMENT - COFFEE GRINDERS FIORENZATO
KOMPLETTE EINRICHTUNGEN - KAFFEEMÜHLEN FIORENZATO
EQUIPOS COMPLETOS - MOLINOS CAFÉ FIORENZATO

Fiorenzato

1 2 3 4 5

Photo	LF Code	Model	Grinding burrs (ø)	Coffee bean capacity (g)	Power supply	Dimensions (mm)
1	**1252650**	F5 AUTOMATIC - AUTOMATICO	64	1500	220/240V 50Hz 350W	230x270x615
2	**5088894**	F6 AUTOMATIC - AUTOMATICO	83	1500	220/240V 50Hz 650W	230x270x615
3	**1252660**	F64 ELECTRONIC - ELETTRONICO	64	1500	220/240V 50Hz 350W	230x270x615
4	**1235133**	F83 ELECTRONIC - ELETTRONICO	83	1500	220/240V 50Hz 650W	230x270x670
5	**1235132**	F4 NANO ELECTRONIC - ELETTRONICO	58	500	220/240V 50Hz 250W	169x240x473

ATTREZZATURE COMPLETE - MACINACAFFÈ LF
COMPLETE EQUIPMENT - COFFEE GRINDERS LF
KOMPLETTE EINRICHTUNGEN - KAFFEEMÜHLEN LF
EQUIPOS COMPLETOS - MOLINOS CAFÉ LF

1 2

Photo	LF Code	Model	Grinding burrs (ø)	Coffee bean capacity (g)	Power supply	Dimensions (mm)
1	**1252003**	MINI ON DEMAND	38	500	220V 50/60Hz	165x270x375
2	**1252002**	MINI	38	500	220V 50/60Hz	165x270x375

ATTREZZATURE COMPLETE - MACINACAFFÈ MAHLKÖNIG
COMPLETE EQUIPMENT - COFFEE GRINDERS MAHLKÖNIG
KOMPLETTE EINRICHTUNGEN - KAFFEEMÜHLEN MAHLKÖNIG
EQUIPOS COMPLETOS - MOLINOS CAFÉ MAHLKÖNIG

1

Photo	LF Code	Model	Grinding burrs (ø)	Coffee bean capacity (g)	Power supply	Dimensions (mm)
1	**1252620**	VARIO ON DEMAND	54	250	200/230V 50/60Hz	125x160x370

ATTREZZATURE COMPLETE - MACINACAFFÈ MAZZER
COMPLETE EQUIPMENT - COFFEE GRINDERS MAZZER
KOMPLETTE EINRICHTUNGEN - KAFFEEMÜHLEN MAZZER
EQUIPOS COMPLETOS - MOLINOS CAFÉ MAZZER

MAZZER®

1

2

3

Photo	LF Code	Model	Grinding burrs (ø)	Coffee bean capacity (g)	Power supply	Dimensions (mm)
1	**1252906**	SUPER JOLLY MANUAL - MANUALE	64	1200	220/240V 50/60Hz	195x263x600
1	**1252907**	SUPER JOLLY AUTOMATIC - AUTOMATICO	64	1200	220/240V 50/60Hz	195x263x600
2	**1252908**	MAJOR MANUAL - MANUALE	83	1200	220/240V 50/60Hz	202x312x620
2	**1252909**	MAJOR AUTOMATIC - AUTOMATICO	83	1200	220/240V 50/60Hz	202x312x620
3	**1252910**	MINI MANUAL - MANUALE	58	600	220/240V 50/60Hz	158x188x460

ATTREZZATURE COMPLETE - MACINACAFFÈ MANUALI HARIO
COMPLETE EQUIPMENT - HAND COFFEE GRINDERS HARIO
KOMPLETTE EINRICHTUNGEN - HAND-KAFFEEMÜHLEN HARIO
EQUIPOS COMPLETOS - MOLINOS CAFÉ MANUALES HARIO

1

2

3

4

5

6

Photo	LF Code	Notes	Dimensions	Model
1	**1235061**	40 gr	108x70x180 mm	MXR-2TB
2	**1235063**	100 gr	ø 92x170 mm	MSCS-2TB
3	**1235064**	14 gr	ø 72x175 mm	MSS-1B
4	**1235062**	40 gr	ø 105x200 mm	CM-502C
5	**1235090**	120 gr	ø 110x190 mm	CMHC-4C
6	**1235101**	30 gr	ø 86x185 mm	MCW-2

ATTREZZATURE COMPLETE - MACINACAFFÈ MANUALI COMANDANTE
COMPLETE EQUIPMENT - HAND COFFEE GRINDERS COMANDANTE
KOMPLETTE EINRICHTUNGEN - HAND-KAFFEEMÜHLEN COMANDANTE
EQUIPOS COMPLETOS - MOLINOS CAFÉ MANUALES COMANDANTE

COMANDANTE

1

Top Quality

100% Made in Germany

Photo	LF Code	Notes	Dimensions	Model
1	**1235300**	S. STEEL CONICAL BURRS - MACINE CONICHE IN ACCIAIO	108x70x180 mm	C40 NITRO BLADE

Macine coniche in acciaio inox trattate con un processo di indurimento che ne garantisce una particolare durezza e resistenza nel tempo.

Stainless steel conical burrs treated by an hardening process to guarantee a special hardness and long lasting life.

Konische Edelstahlmahlscheibe mit einem spezifischen Härtungsprozess verarbeitet, der eine spezielle Härte und Lebensdauer garantiert.

Fresas cónicas en acero tratadas con un proceso de endurecimiento que garantiza una dureza particular y una mayor resistencia en el tiempo.

ATTREZZATURE COMPLETE - MACINACAFFÈ MANUALI HANDGROUND
COMPLETE EQUIPMENT - MANUAL COFFEE GRINDERS HANDGROUND
KOMPLETTE EINRICHTUNGEN - HANDKAFFEEMÜHLEN HANDGROUND
EQUIPOS COMPLETOS - MOLINOS DE CAFÉ MANUALES HANDGROUND

1

2

3

Photo	LF Code	Notes	Dimensions	Model
1	**1235251**	100 gr	ø 105x210 mm	BLACK
2	**1235250**	100 gr	ø 105x210 mm	WHITE
3	**1235252**	100 gr	ø 105x210 mm	NICKEL

ATTREZZATURE COMPLETE - MONTALATTE
EQUIPMENT, COMPLETE - MILK FROTHERS
KOMPLETTE EINRICHTUNGEN - MILCHSCHÄUMER
EQUIPOS COMPLETOS - ESPUMADORES LECHE

1

2

3

Photo	LF Code	Power supply	Capacity	Dimensions
1	**2106311**	230V 50Hz 600W	250 ml	22x174x182 mm
2	**2106211**	230V 50Hz 600W	250 ml	125x150x170 mm
3	**1235065**	230V 50Hz 600W	450 ml	125x180x180 mm

Creano schiuma di latte in pochi secondi
100 ml di latte creano 400 ml di schiuma - 250 ml di latte creano 170 ml di schiuma
coperchio anti schizzi - facili da pulire - ideali anche per cioccolata calda e fredda
elemento riscaldante incorporato
3 funzioni:
miscelano e schiumano a freddo - scaldano e miscelano a caldo - scaldano e montano il latte
lattiere con rivestimento antiaderente - lavabili in lavastoviglie

They froth milk in few seconds
100 ml of milk make 400 ml of froth - 250 ml of milk make 170 ml of froth
anti-splash lid -easy to clean - also ideal for hot and cold chocolate
built-in heating element
3 functions:
froth hot milk - froth cold milk - warm up milk
milkpitchers with nonstick coating - dishwasher safe

Sie erzeugen Schaum in wenigen Sekunden.
100 ml Milch ergeben 400 ml Schaum - 250 ml Milch ergeben 170 ml Schaum
Spritzschutzdeckel - einfach zu reinigen - Ideal für heisse und kalte Schokoladen
Eingebautes Heizelement
3 Funktionen:
sie mischen und schäumen kalte Milch - sie mischen und schäumen heisse Milch
sie wärmen die Milch beim mischen
Spülmachinenfeste Milchkännchen mit Antihaft-Beschichtung

Crean espuma de leche en cuestión de segundos
100ml de leche, crean 400ml de espuma - 250 ml de leche, crean 170 ml de espuma
Tapa anti-salpicaduras - fácil de limpiar - Ideal para chocolate caliente y frío
Elemento calentador incorporado
3 funciones:
Mezclador y generador de espuma en frío - Calentador y mezclador en caliente
Calentador y espumadora de leche
Lecheras con revestimiento antiadherente Aptos para lavavajillas

ATTREZZATURE COMPLETE - SISTEMA PER CAFFÈ AEROPRESS
EQUIPMENT, COMPLETE - SYSTEM FOR COFFEE AEROPRESS
EINRICHTUNGEN - SYSTEM FÜR KAFFEE AEROPRESS
EQUIPOS COMPLETOS - SISTEMA PARA CAFÉ AEROPRESS

1

2

3

4

Photo	LF Code	Notes
1	**1235039**	---
2	**1235040**	350 FILTERS
3	**1235041**	STAINLESS STEEL 150 MICRON
4	**1235068**	STAINLESS STEEL 35 MICRON

Metti il filtro nel portafiltro
Put filter on chamber
Filter in den Siebträger einsetzen
Introduzca el filtro en el portafiltro

Aggiungi il caffè
Add coffee brew
Kaffee hinzufügen
Añada café

Aggiungi acqua calda
Add hot water
Heißwasser aufgießen
Añada agua caliente

Mescola per dieci secondi
Stir for ten seconds
Ca. 10 Sekunden durchrühren
Mezcle durante diez segundos

Inserisci il pistone e spingi delicatamente
Insert piston and gently press
Kolben aufsetzen und sanft hinunterpressen
Inserte el pistón y empuje suavemente

Attrezzature complete
Equipment, complete
Komplettgeräte
Equipos completos

ATTREZZATURE COMPLETE - SISTEMA PER CAFFÈ PERCOLATO CHEMEX
COMPLETE EQUIPMENT - SYSTEM FOR POUR-OVER COFFEE CHEMEX
EINRICHTUNGEN - SYSTEM FÜR KAFFEE-PERKOLATOR CHEMEX
EQUIPOS COMPLETOS - SISTEMA DE CAFÉ PERCOLADO CHEMEX

1

2

3

4

5

6

Photo	LF Code	Notes	Dimensions
1	**1235130**	1-3 cups	ø 105x210 mm
2	**1235043**	2-6 cups	ø 135x213 mm
3	**1235098**	1-3 cups	ø 110x210 mm
4	**1235056**	2-6 cups	ø 130x220 mm
4	**1235129**	6-8 cups	ø 145x230 mm
4	**1235128**	8-10 cups	ø 160x235 mm
5	**1235044**	6-8-10 cups	100 FILTERS
6	**1235099**	1-3 cups	100 FILTERS

ATTREZZATURE COMPLETE - SISTEMA PER CAFFÈ PERCOLATO E&B
COMPLETE EQUIPMENT - SYSTEM FOR POUR-OVER COFFEE E&B
EINRICHTUNGEN - SYSTEM FÜR KAFFEE-PERKOLATOR E&B
EQUIPOS COMPLETOS - SISTEMA DE CAFÉ PERCOLADO E&B

E&B LAB
CRAFTED IN ITALY

1 - 560 ml

2 - 800 ml

3

100% MADE IN ITALY

Photo	LF Code	Notes	Dimensions
1	**1235111**	1-4 cups / 560 ml	ø 135x96 mm
2	**1235113**	1-4 cups / 800 ml	ø 145x96 mm
3	**1235115**	-10+100°C - x 1235111	260 mm

ATTREZZATURE COMPLETE - SISTEMA PER CAFFÈ PERCOLATO E&B
COMPLETE EQUIPMENT - SYSTEM FOR POUR-OVER COFFEE E&B
EINRICHTUNGEN - SYSTEM FÜR KAFFEE-PERKOLATOR E&B
EQUIPOS COMPLETOS - SISTEMA DE CAFÉ PERCOLADO E&B

1

2

3

4

Photo	LF Code	Notes	Dimensions
1	**1235097**	1-4 cups	ø 135x96 mm
2	**1235110**	1-4 cups	ø 145x96 mm
3	**1235112**	PAINTED IRON - FERRO VERNICIATO	130x149x180 mm
4	**1235116**	STAINLESS STEEL - ACCIAIO INOX	130x149x180 mm

Il gocciolatore in acciaio E&B IMS non è semplicemente un cono filtrante, ma un vero e proprio sistema di estrazione completo, interamente realizzato in acciaio inox.
Il tutto è composto da un cono filtrante e una struttura di supporto.
Il cono è una membrana di fili d'acciaio inox intrecciati, con una capacità di filtraggio di 35 µm e rappresenta una valida alternativa agli attuali sistemi composti da una tazza di ceramica o altri materiali e un filtro di carta.

The E&B IMS steel dripper is not only a filtering cone but also a complete extraction system entirely made of stainless steel.
A cone filter and a support structure make up the system.
The cone is a membrane of woven stainless steel wires, which allows filtering 35 µm and represents a valid alternative to the current systems which are made up of cups made of ceramic or other materials and paper filters.

Der Kaffeetropfenfilter aus Stahl E&B IMS ist nicht nur ein einfacher Filterkonus, sondern auch ein regelrechtes Extraktionssystem aus Edelstahl.
Das komplette System besteht aus einem Filterkonus und einer Supportstruktur. Der Konus ist eine Membran von gewebtem Edelstahlkabeln, der bis zu 35 µm filtriert. Es ist eine gute Alternative zu den aktuellen Systemen, die aus Keramiktassen oder anderen Materialen und Papierfiltern bestehen.

El filtro en acero E&B IMS no es simplemente un cono filtrante si no un verdadero sistema de extracción completo, realizado de acero inoxidable.
Está compuesto de un cono filtrante y una estructura de soporte .
El cono es una membrana de alambres de acero inoxidable tejidos, con una capacidad de filtrar de 35 µm y representa una válida alternativa a los sistemas actuales compuestos por tazas de cerámica u otros materiales así como el filtro de papel.

ATTREZZATURE COMPLETE - SISTEMA PER CAFFÈ PERCOLATO HARIO
COMPLETE EQUIPMENT - SYSTEM FOR POUR-OVER COFFEE HARIO
EINRICHTUNGEN - SYSTEM FÜR KAFFEE-PERKOLATOR HARIO
EQUIPOS COMPLETOS - SISTEMA PARA CAFÉ PERCOLADO HARIO

1

2

3

4

5

6

Photo	LF Code	Notes	Dimensions	Model
1	**1235052**	2 Kg	120x190x28 mm	VST-2000B
2	**1235114**	2 Kg	120x175x30 mm	VSTM-2000HSV
3	**1235122**	---	---	VSA-1SV
4	**1235051**	---	---	VSS-1T
5	**1235070**	---	---	VAS-1
6	**1235121**	220/240V 50/60Hz	135x230x390 mm	EVCG-8B-E

ATTREZZATURE COMPLETE - BOLLITORI BONAVITA
COMPLETE EQUIPMENT - KETTLES BONAVITA
KOMPLETTE EINRICHTUNGEN - WASSERKOCHER BONAVITA
EQUIPOS COMPLETOS - HERVIDORES BONAVITA

1

2

3

4

5

Photo	LF Code	Notes	Power supply	Model
1	**1235094**	1.0 L	220/240V 50Hz - 1000W	BV382510VC
2	**1235095**	1.7 L	220/240V 50/60Hz - 1500W	BV382518VC
3	**1235117**	1.0 L	---	BV3825ST
4	**1235119**	600 ml	---	BV6600CA
5	**1235118**	1-4 CUPS	---	BV4000IDV2

ATTREZZATURE COMPLETE - SISTEMA PER CAFFÈ PERCOLATO FELLOW
COMPLETE EQUIPMENT - SYSTEM FOR POUR-OVER COFFEE FELLOW
KOMPLETTE EINRICHTUNGEN - SYSTEM FÜR KAFFEE-PERKOLATOR FELLOW
EQUIPOS COMPLETOS - SISTEMA PARA CAFÉ PERCOLADO FELLOW

FELLOW

1

2

3

Photo	LF Code	Capacity	Notes	Model
1	**1235400**	1.0 L	COMPATIBLE: GAS - ELECTRIC - INDUCTION	1102
2	**1235401**	1.0 L	COMPATIBLE: GAS - ELECTRIC - INDUCTION	1042
3	**1235402**	1.0 L	COMPATIBLE: GAS - ELECTRIC - INDUCTION	1043

ATTREZZATURE COMPLETE - SISTEMA PER CAFFÈ PERCOLATO HARIO
COMPLETE EQUIPMENT - SYSTEM FOR POUR-OVER COFFEE HARIO
EINRICHTUNGEN - SYSTEM FÜR KAFFEE-PERKOLATOR HARIO
EQUIPOS COMPLETOS - SISTEMA PARA CAFÉ PERCOLADO HARIO

1

2

3

4

5

6

Photo	LF Code	Notes	Power supply	Model
1	**1235069**	0.9 L	---	VKBN-90CP
2	**5078829**	1.0 L	---	VKB-100HSV
3	**1235047**	1.2 L	---	VKB-120HSV
4	**1235085**	0.8 L	220/240V 50Hz	EVKB-80EHSV
5	**1235131**	0.8 L	220/240V 50Hz	EVKT-80E-HSV
6	**1235123**	0/110°C	---	VTM-1B

ATTREZZATURE COMPLETE - SISTEMA PER CAFFÈ PERCOLATO HARIO
COMPLETE EQUIPMENT - SYSTEM FOR POUR-OVER COFFEE HARIO
EINRICHTUNGEN - SYSTEM FÜR KAFFEE-PERKOLATOR HARIO
EQUIPOS COMPLETOS - SISTEMA PARA CAFÉ PERCOLADO HARIO

1

2

3

4

5

Photo	LF Code	Notes	Colour	Model
1	**1235048**	1-2 CUPS	BIANCO/WHITE	VDC-01W
1	**1235049**	1-4 CUPS	BIANCO/WHITE	VDC-02W
2	**1235076**	1-2 CUPS	ROSSO/RED	VDC-01R
2	**1235057**	1-4 CUPS	ROSSO/RED	VDC-02R
3	**1235078**	1-4 CUPS	ROSSO/RED	VDG-02R
4	**1235079**	1-4 CUPS	NERO/BLACK	VDG-02B
5	**1235088**	1-2 CUPS	NERO/BLACK	VDGN-01B
5	**1235080**	1-4 CUPS	NERO/BLACK	VDGN-02B

ATTREZZATURE COMPLETE - SISTEMA PER CAFFÈ PERCOLATO HARIO
COMPLETE EQUIPMENT - SYSTEM FOR POUR-OVER COFFEE HARIO
EINRICHTUNGEN - SYSTEM FÜR KAFFEE-PERKOLATOR HARIO
EQUIPOS COMPLETOS - SISTEMA PARA CAFÉ PERCOLADO HARIO

1

2

3

4

5

6

Photo	LF Code	Notes	Model
1	**1235075**	360 ml	XGS-36TB
2	**1235050**	600 ml	XGS-60TB
3	**1235083**	360 ml	XVD-36B
4	**1235084**	600 ml	XVD-60B
5	**1235096**	450 ml	VCS-01B
6	**1235086**	700 ml	VCS-02B

ATTREZZATURE COMPLETE - SISTEMA PER CAFFÈ PERCOLATO HARIO
COMPLETE EQUIPMENT - SYSTEM FOR POUR-OVER COFFEE HARIO
EINRICHTUNGEN - SYSTEM FÜR KAFFEE-PERKOLATOR HARIO
EQUIPOS COMPLETOS - SISTEMA PARA CAFÉ PERCOLADO HARIO

1

2

3

4

5 - FOR TEA

Photo	LF Code	Notes	Model
1	**5078809**	700 ml / 1-4 CUPS	VCSD-02-EX
2	**1235072**	700 ml / 1-4 CUPS	VDD-02B
3	**1235073**	240 ml / 1-2 CUPS	DPW-1
4	**1235074**	480 ml / 3-4 CUPS	DPW-3
5	**1235087**	800 ml / FOR TEA	TDR-8006T

ATTREZZATURE COMPLETE - SISTEMA PER CAFFÈ PERCOLATO HARIO
COMPLETE EQUIPMENT - SYSTEM FOR POUR-OVER COFFEE HARIO
EINRICHTUNGEN - SYSTEM FÜR KAFFEE-PERKOLATOR HARIO
EQUIPOS COMPLETOS - SISTEMA PARA CAFÉ PERCOLADO HARIO

1

2

3

4

Photo	LF Code	Notes	Model
1	**1235104**	400 ml	VCWN-40-OV
2	**1235105**	600 ml	VCWN-60-OV
3	**1235108**	1-2 CUPS	VDG-01-OV
4	**1235109**	1-4 CUPS	VDG-02-OV

ATTREZZATURE COMPLETE - SISTEMA PER CAFFÈ PERCOLATO HARIO
COMPLETE EQUIPMENT - SYSTEM FOR POUR-OVER COFFEE HARIO
EINRICHTUNGEN - SYSTEM FÜR KAFFEE-PERKOLATOR HARIO
EQUIPOS COMPLETOS - SISTEMA PARA CAFÉ PERCOLADO HARIO

1

2

3

Photo	LF Code	Notes	Colour	Model
1	**1235081**	1-4 CUPS	ARGENTO/SILVER	VDM-02HSV
2	**1235082**	1-4 CUPS	RAME/COPPER	VDM-02CP
3	**1235120**	1-4 CUPS	RAME/COPPER	VDPC-02CP

ATTREZZATURE COMPLETE - SISTEMA PER CAFFÈ SYPHON HARIO
COMPLETE EQUIPMENT - COFFEE SYSTEM SYPHON HARIO
EINRICHTUNGEN - KAFFEESYSTEM SYPHON HARIO
EQUIPOS COMPLETOS - SISTEMA DE CAFÉ SYPHON HARIO

1

2

3

Photo	LF Code	Notes	Dimensions	Model
1	**5069522**	600 ml / 5 CUPS	H 390 mm	TCA-5EX
2	**1235058**	360 ml / 3 CUPS	H 350 mm	TCA-3
3	**1235071**	600 ml / 5 CUPS	H 380 mm	SCA-5

ATTREZZATURE COMPLETE - SISTEMA PER COFFEE PRESS HARIO
COMPLETE EQUIPMENT - SYSTEM FOR COFFEE HARIO
KOMPLETTE EINRICHTUNGEN - SYSTEM FÜR KAFFEE PRESS HARIO
EQUIPOS COMPLETOS - SISTEMA PARA COFFEE PRESS HARIO

1

2

3

Photo	LF Code	Notes	Model
1	**1235103**	400 ml / 1-4 CUPS / ø 125x225 mm	DGC-40-OV
2	**1235106**	300 ml / 1-2 CUPS / ø 75x175 mm	CPSW-2-OV
3	**1235107**	680 ml / 3-4 CUPS / ø 95x188 mm	CPSW-4-OV

ATTREZZATURE COMPLETE - SISTEMA PER CAFFÈ PERCOLATO HARIO
COMPLETE EQUIPMENT - SYSTEM FOR POUR-OVER COFFEE HARIO
EINRICHTUNGEN - SYSTEM FÜR KAFFEE-PERKOLATOR HARIO
EQUIPOS COMPLETOS - SISTEMA PARA CAFÉ PERCOLADO HARIO

1 - STANDARD

2 - STANDARD

3 - NO TASTE

4 - NO TASTE

5

6

Photo	LF Code	Notes	Model
1	**1235053**	1-2 CUPS	VCF-01-100W
2	**1235054**	1-4 CUPS	VCF-02-100W
3	**1235091**	1-2 CUPS	VCF-01-100M
4	**1235092**	1-4 CUPS	VCF-02-100M
5	**1235089**	1-2 CUPS	FD-1
5	**1235093**	3-4 CUPS	FD-3
6	**1235102**	1-2 / 1-4	VPS-100W

ATTREZZATURE COMPLETE - FILTRI VARI PER CAFFÈ PERCOLATO
EQUIPMENT, COMPLETE - VARIOUS FILTERS FOR SYSTEM FOR POUR-OVER COFFEE
KOMPLETTE EINRICHTUNGEN - VERSCHIEDENE FILTER FÜR KAFFEE-PERKOLATOR
EQUIPOS COMPLETOS - FILTROS VARIADOS PARA CAFÉ PERCOLADO

1

2

3

4

5

6

Photo	LF Code	Notes	Model
1	**1235110**	INOX / 1-4 CUPS	E&B - HARIO V60 - CHEMEX
2	**1235044**	4-6 CUPS	CHEMEX FS-100
3	**1235099**	1-3 CUPS	CHEMEX FP-2
4	**1235040**	350 FILTERS	AEROPRESS
5	**1235041**	INOX - 150 MICRON	AEROPRESS
5	**1235068**	INOX - 35 MICRON	AEROPRESS
6	**1235067**	200 MICRON	SYPHON
6	**1235066**	35 MICRON	SYPHON

BECCUCCI EROGAZIONE UNIVERSALI
UNIVERSAL SPOUTS
AUSLAUFDÜSEN - UNIVERSELL
SALIDAS EROGACIÓN UNIVERSALES

1

2

3

4

Photo	LF Code	Connection (ø)	Notes
1	**1022501**	3/8	OPEN - APERTO
2	**1022504**	3/8	CLOSED - CHIUSO
3	**1022503**	3/8	HIGH - ALTO
4	**5031337**	3/8	LOW - BASSO

BECCUCCI EROGAZIONE UNIVERSALI
UNIVERSAL SPOUTS
AUSLAUFDÜSEN - UNIVERSELL
SALIDAS EROGACIÓN UNIVERSALES

1

2

3

4

5

Photo	LF Code	Connection (ø)	Notes
1	**1022502**	3/8	LOW - BASSO
2	**1022521**	3/8	HIGH - ALTO
3	**1022523**	3/8	ADJUSTABLE LOW - REGOLABILE BASSO
4	**1022522**	3/8	ADJUSTABLE HIGH - REGOLABILE ALTO
5	**1022551**	3/8	TRIPLE SPOUT - TRE VIE

BECCUCCI EROGAZIONE DEDICATI VARI MARCHI
SPECIFIC SPOUTS - VARIOUS BRANDS
STANDAUSLAUFDÜSEN VERSCHIEDENE MARKEN
SALIDAS EROGACIÓN DEDICADAS VARIAS MARCAS

1

2

3

4

5

Photo	LF Code	Connection (ø)	Suitable for
1	**1022032**	3/8	RANCILIO 21102601 - RENEKA 9006293
2	**1022059**	3/8	BEZZERA 7305006TW - CARIMALI 22.00786.CR - ECM C229900562
2	**1022059**	3/8	EXPOBAR 75000050 - FIAMMA 5.0.000.0104 - SIMONELLI 07300092
3	**1022505**	3/8	SPAZIALE 00656
4	**1022550**	3/8	CARIMALI 95.01800 - ELEKTRA 01308021 - EXPOBAR 75000051
4	**1022550**	3/8	LAVAZZA 10065958 - SIMONELLI 07300211 - SANREMO 10052078
5	**1022099**	3/8	ASTORIA 27032001 - LAVAZZA 10066291 - MCE 27032001 - WEGA WY27032001

Beccucci di erogazione caffè
Spouts for coffee
Auslaufdüsen für Kaffee
Bocas salida café

BECCUCCI EROGAZIONE DEDICATI VARI MARCHI
SPECIFIC SPOUTS - VARIOUS BRANDS
STANDAUSLAUFDÜSEN VERSCHIEDENE MARKEN
SALIDAS EROGACIÓN DEDICADAS VARIAS MARCAS

1

2

3

4

5

6

Photo	LF Code	Connection (ø)	Suitable for
1	**1022506**	3/8	ASTORIA 27042001 - BEZZERA 7305007TW - BFC 4631007 - ECM C229900566
1	**1022506**	3/8	EXPOBAR 75000060 - FIAMMA 5.0.000.0106 - GAGGIA WGA6001023000
1	**1022506**	3/8	SIMONELLI 06200008 - RANCILIO 21100801 - RENEKA 9006294
1	**1022506**	3/8	SAECO WGA6001023000 - SPAZIALE 00654 - WEGA WY27042001
2	**1022102**	3/8	CARIMALI 95.01632.CR
3	**1022524**	3/8	BEZZERA 7305001 - CARIMALI 22.00782 - ELEKTRA 00063021
3	**1022524**	3/8	EXPOBAR 75000067 - GAGGIA WGA6301004010 - LAVAZZA 10065959
3	**1022524**	3/8	SIMONELLI 07300212 - RANCILIO 20112111 - SAECO WGA6301004010
3	**1022524**	3/8	SANREMO 10052088 - VICTORIA ARDUINO 07300212
4	**1022531**	3/8	CONTI 407168
5	**1022532**	M18	CONTI
6	**1022004**	3/8	MARZOCCO L119

BECCUCCI EROGAZIONE ACCESSORI
SPOUTS - ACCESSORIES
AUSLAUFDÜSEN ZUBEHÖRE
SALIDAS EORGACIÓN - ACCESORIOS

1

2

3

4

5

Photo	LF Code	Connection (ø)	Suitable for	Notes
1	**1022003**	3/8	ASTORIA 27060201 - WEGA WY27060201	EXTENSION - PROLUNGA
2	**1022103**	3/8	VIBIEMME RACCP864	EXTENSION - PROLUNGA
3	**1241134**	3/8	ELEKTRA 00526021	EXTENSION - PROLUNGA
4	**1349554**	3/8	---	ADAPTER FOR PRESSURE GAUGE - ADATTATORE PER MANOMETRO
5	**1160559**	---	---	SCREW ADJUSTABLE SPOUT - VITE PER BECCUCCIO REGOLABILE

BECCUCCI EROGAZIONE DEDICATI CIMBALI-FAEMA
SPECIFIC SPOUTS CIMBALI-FAEMA
STANDAUSLAUFDÜSEN CIMBALI-FAEMA
SALIDAS EROGACIÓN DEDICADAS CIMBALI-FAEMA

1

2

3

4

Photo	LF Code	Connection (ø)	Suitable for	For machine model
1	**1022511**	---	CIMBALI 458-102-009	M15 - M20 - M27 - M30
2	**1022512**	---	CIMBALI 458-092-009	M15 - M20 - M27 - M30
3	**1022546**	M16	CIMBALI	---
4	**1022547**	M16	CIMBALI	---

BECCUCCI EROGAZIONE DEDICATI CIMBALI-FAEMA
SPECIFIC SPOUTS CIMBALI-FAEMA
STANDAUSLAUFDÜSEN CIMBALI-FAEMA
SALIDAS EROGACIÓN DEDICADAS CIMBALI-FAEMA

1

2

3

4

5

Photo	LF Code	Connection (ø)	Suitable for	For machine model
1	**1022002**	M16	CIMBALI 4822-130-085 - FAEMA 4822130085	---
2	**1022064**	M16	CIMBALI 457-360-007 - FAEMA 457360007	---
3	**1022100**	M16	CIMBALI 457-358-017 - FAEMA 457358017	---
4	**1022065**	M16	CIMBALI 457-894-020 - FAEMA 457894020	---
5	**1022101**	M16	CIMBALI 457-895-020 - FAEMA 457895020	---

BECCUCCI EROGAZIONE DEDICATI CIMBALI-FAEMA
SPECIFIC SPOUTS CIMBALI-FAEMA
STANDAUSLAUFDÜSEN CIMBALI-FAEMA
SALIDAS EROGACIÓN DEDICADAS CIMBALI-FAEMA

1

2

3

4

Photo	LF Code	Connection (ø)	Suitable for	For machine model
1	**1022108**	M16	CIMBALI 457-379-017	M100
2	**1022109**	M16	CIMBALI 457-569-007 - FAEMA 457569007	M100 - EMBLEMA RESTYLING
3	**1022110**	M16	CIMBALI 457-568-007 - FAEMA 457568007	M100 - EMBLEMA RESTYLING
4	**1022111**	M16	CIMBALI 457-380-027	M100

Beccucci di erogazione caffè
Spouts for coffee
Auslaufdüsen für Kaffee
Bocas salida café

BECCUCCI EROGAZIONE DEDICATI DELONGHI
SPOUTS ONLY FOR DELONGHI
AUSLAUFDÜSEN DELONGHI
SALIDAS EROGACIÓN PARA DELONGHI

1

Photo	LF Code	Colour	Suitable for	For machine model
1	**5071410**	BLACK - NERO	DELONGHI FL29301	PRODIGIO - PRODIGIO & MILK - U

BECCUCCI EROGAZIONE DEDICATI JURA
SPOUTS ONLY FOR JURA
AUSLAUFDÜSEN JURA
SALIDAS EROGACIÓN PARA JURA

1

Photo	LF Code	Colour	Suitable for	For machine model
1	**1022112**	GREY - GRIGIO	JURA 63572	X7

BECCUCCI EROGAZIONE DEDICATI SAECO-GAGGIA
SPECIFIC SPOUTS SAECO-GAGGIA
STANDAUSLAUFDÜSEN SAECO-GAGGIA
SALIDAS EROGACIÓN DEDICADAS SAECO-GAGGIA

1

2

3

4

5

6

Photo	LF Code	Colour	Suitable for	For machine model
1	**1022014**	GREY - GRIGIO	SAECO 0347.A03.710	ROYAL - ROYAL PROFESSIONAL
2	**1022017**	BLACK - NERO	SAECO 0327.A07.050	MAGICCOMFORT - MAGICROMA - ROYALPROFESSIONAL
3	**5059608**	BLACK - NERO	SAECO 0333.A03.760	ROYALOFFICE
4	**1022010**	GREY - GRIGIO	SAECO 0327.010.680	MAGICROMA
5	**5056426**	BLACK - NERO	SAECO 0347.011.050	ROYAL PROFESSIONAL
6	**5066636**	BLACK - NERO	SAECO 0360.024.050	ROYAL PROFESSIONAL

BECCUCCI EROGAZIONE DEDICATI SAECO-GAGGIA
SPECIFIC SPOUTS SAECO-GAGGIA
STANDAUSLAUFDÜSEN SAECO-GAGGIA
SALIDAS EROGACIÓN DEDICADAS SAECO-GAGGIA

1

2

3

4

5

Photo	LF Code	Colour	Suitable for	For machine model
1	**1022010**	GREY - GRIGIO	SAECO 0327.010.680	MAGICROMA
2	**1022012**	BLACK - NERO	SAECO 0311.011.380	TREVI-VIAROMA
3	**5023944**	BLACK - NERO	SAECO 223700550	CAFFEIT-CAFFEBUONO
3	**5023944**	BLACK - NERO	GAGGIA 223700550	SYNCRONY LOGIC
4	**5038343**	BLACK - NERO	GAGGIA 223701304	SYNCRONY - TITANIUM
5	**1022058**	BLACK - NERO	SAECO 0311.022.380	TREVI-VIAROMA

BECCUCCI EROGAZIONE DEDICATI SAECO-GAGGIA
SPECIFIC SPOUTS SAECO-GAGGIA
SPEZIFISCHE AUSLÄUFE SAECO-GAGGIA
SALIDAS DE EROGACIÓN ESPECÍFICAS SAECO-GAGGIA

1

2

Photo	LF Code	Colour	Suitable for	For machine model
1	**5500638**	BLACK - NERO	SAECO 11006983	SPIDEMVILLA
2	**5034833**	BLACK - NERO	SAECO 149501050	INCANTO

BECCUCCI EROGAZIONE MACCHINE CAFFE' CIALDA
SPOUTS FOR COFFEE PODS MACHINES
AUSLAUFDÜSEN FÜR KAFFEEPADMASCHINEN
SALIDAS EROGACIÓN MÁQUINAS CAFÉ CÁPSULAS

1

2

3

4

Photo	LF Code	Dimensions (mm)	Suitable for	For machine model
1	**1022069**	ø 8x60	GRIMAC 1200200037	AMBRA
2	**1022070**	ø 8x54	GRIMAC MG131-1200200001	NUVOLA - OPALE - TERRY
3	**1022107**	ø 8	DIDIESSE FR033	FROG
4	**1022115**	ø 8	LA PICCOLA A06	CECILIA - PICCOLA - SARA

BECCUCCI EROGAZIONE RIVESTITI IN NANOQUARZO
OUTLET SPOUTS NANOQUARTZ COATED
AUSLAUFDÜSE AUS NANOQUARZ BESCHICHTET
BOQUILLAS EROGACIÓN RECUBIERTAS DE NANOCUARZO

1

2

Nanotech

Photo	LF Code	Connection (ø)	Notes
1	**1165257**	3/8	COATED WITH NANOQUARTZ - RIVESTITI IN NANOQUARZO
2	**1165256**	3/8	COATED WITH NANOQUARTZ - RIVESTITI IN NANOQUARZO

Barista Tools

Quality products for coffee specialists

BILANCE DIGITALI
DIGITAL SCALES
DIGITALWAAGEN
BÁSCULAS DIGITALES

1 - BREWISTA

2

3

4

5 - HARIO

6 - HARIO

Photo	LF Code	Description	Maximum capacity (g)	Division (g)	Dimensions (mm)
1	**1017100**	TIMER & WEIGHT WATERPROOF - TEMPO E PESO	2000	0.1	105x126x20
2	**1017500**	TIMER & WEIGHT - TEMPO E PESO	3000	0.1	130x190x28
3	**1017026**	ANTIURTO - SHOCKPROOF	1000	0.1	142x82x25
4	**1017027**	DIMENSIONI RIDOTTE - MINI TABLE TOP	200	0.01	75x110x25
5	**1235052**	SPECIFICA PER HARIO - FOR HARIO PRODUCTS	2000	0.2/3.0	120x190x28
6	**1235114**	SPECIFICA PER HARIO - FOR HARIO PRODUCTS	2000	0.2/3.0	120x190x28

BILANCE DIGITALI
DIGITAL SCALES
DIGITALWAGEN
BÁSCULAS DIGITALES

1

2

3

4

5

6

Photo	LF Code	Description	Maximum capacity (g)	Division (g)	Dimensions (mm)
1	**1017001**	DIGITAL SCALE TANITA	120	0.1	156x76x16
2	**1017002**	DIGITAL SCALE MIX	600	0.1	127x78x18
3	**1017003**	DIGITAL SCALE TANGENT	120	0.1	110x90x22
4	**1017004**	DIGITAL SCALE	500	0.1	119x80x20
5	**1017005**	DIGITAL SCALE	300	0.1	220x50
6	**3017002**	DIGITAL SCALE	1000	1	225x178x45

BILANCE DIGITALI ACAIA
DIGITAL SCALES ACAIA
DIGITALWAAGEN ACAIA
BÁSCULAS DIGITALES ACAIA

acaia

1

2

3

Top Quality

Photo	LF Code	Description	Maximum capacity (g)	Division (g)	Dimensions (mm)
1	**1017200**	LUNAR	2000	0.1	105x105x15
2	**1017201**	PEARL WHITE	2000	0.1	160x160x32
3	**1017202**	PEARL BLACK	2000	0.1	160x160x32

BILANCE DIGITALI ESCALI
DIGITAL SCALES ESCALI
DIGITALWAAGEN ESCALI
BÁSCULAS DIGITALES ESCALI

Escali

1

2

3

Photo	LF Code	Description	Maximum capacity (g)	Division (g)	Dimensions (mm)
1	**1017014**	BAMBÙ - BAMBOO	7000g/15lb/248oz	1g - 0.1oz	230x160x20
2	**1017023**	FUNZIONE BLUETOOTH - BLUETOOTH FUNCTION	5000g/11lb/175oz	1g - 0.1oz	250x150x20
3	**1017024**	INOX - INOX	5000g/11lb/175oz	1g - 0.1oz	223x223x135

CUCCHIAI DOSACAFFE'
COFFEE DOSERS SPOONS
KAFFEEDOSIERLÖFFEL
CUCHARAS DOSIFICADORES CAFE

1

2

3

Photo	LF Code	Material	Capacity
1	**1069001**	PLASTIC	20 ml
2	**1069002**	STAINLESS STEEL - INOX	20 ml
3	**1394720**	STAINLESS STEEL - INOX	365 ml

CALDAIE ASCASO
BOILERS ASCASO
THERMOBLOCK ASCASO
CALDERAS ASCASO

1

Photo	LF Code	Watt - Volt	Suitable for	For machine model
1	**5028397**	900W 230V	ASCASO I..366	ARC - BASIC - DREAM - ELIPSE

CALDAIE BIALETTI
BOILERS BIALETTI
THERMOBLOCK BIALETTI
CALDERAS BIALETTI

1

2

Photo	LF Code	Watt - Volt	Suitable for	For machine model
1	**1048083**	900W 230V	BIALETTI 912990353	MOKONA CF40
2	**1048086**	1200W 230V	BIALETTI 912370140	TAZZISSIMA CF37

CALDAIE DELONGHI
BOILERS DELONGHI
THERMOBLOCK DELONGHI
CALDERINES DELONGHI

1

2

3

4

5

Photo	LF Code	Watt - Volt	Suitable for	For machine model
1	**D048001**	600W 230V	DELONGHI 7332196800	ECA12600 - ECA13000 - ECA14000
2	**1048072**	600W 230V	DELONGHI 7313213901	ESAM3500.S - ESAM5400
3	**5054428**	600W 230V	DELONGHI 7332182500	EAM2000 - EAM3000 - EAM4000
4	**5054447**	600W 230V	DELONGHI 7313213911	ESAM2000 - ESAM3000 - ESAM4000
5	**1048085**	1200W 120V	DELONGHI 7313213921	ESAM2000 - ESAM6620 - ESAM4000 - ESAM5600SL - ESAM6700

CALDAIE DELONGHI
BOILERS DELONGHI
THERMOBLOCK DELONGHI
CALDERINES DELONGHI

1

2

3

4

5

6

Photo	LF Code	Watt - Volt	Suitable for	For machine model
1	**5055958**	1000W 230V	DELONGHI 7332196700	EAM3300S - ECAM22.360 - ESAM3600.S - ESAM6600
1	**5060088**	1000W 120V	DELONGHI 7332212600	EAM3300S - ECAM22.360 - ESAM3600.S - ESAM6600
2	**5057788**	1200W 230V	DELONGHI 5532139700	ESAM5400EX
2	**1048084**	1200W 120V	DELONGHI 5532141300	ESAM5400EX
3	**1048078**	1300W 230V	DELONGHI 5513220541	EC680 - LATTISSIMA OLD - LATTISSIMA TOUCH
4	**1048071**	1400W 230V	DELONGHI 5513214291	ECAM23.210.W - ECAM26.455.C - ESAM5400EX
5	**1048079**	1200W 230V	DELONGHI ES0075957	CITIZ
6	**1048081**	1000W 230V	DELONGHI 5513200309	ECI341 - ECZ351

CALDAIE GAGGIA
BOILERS GAGGIA
THERMOBLOCK GAGGIA
CALDERINES GAGGIA

1 - RECOMMEN.

2 - SUITABLE

3 - 120V

4

5

6

Photo	LF Code	Watt - Volt	Suitable for	For machine model
1	**1048004**	437/1090W 230V	GAGGIA 9019.A61.00A	SYNCRONY COMPACT
2	**1048994**	437/1090W 230V	GAGGIA	SYNCRONY COMPACT
3	**5500492**	275/1090W 120V	GAGGIA 9019.A61.00F	SYNCRONY COMPACT
4	**1755130**	1000W 230V	GAGGIA 288140458	TITANIUM
5	**5038339**	570/680W 120/220/240V	GAGGIA EF0030/A	BABY - CAREZZA - CLASSIC - EVOLUTION - NEWBABY
5	**5057057**	570/680W 120/220/240V	GAGGIA EF0030/02/A	PLATINUM VISION
6	**5008254**	---	GAGGIA S31104702	G105 - G106

CALDAIE GAGGIA
BOILERS GAGGIA
THERMOBLOCK GAGGIA
CALDERINES GAGGIA

1

2

3

4

5

6

Photo	LF Code	Watt - Volt	Suitable for	For machine model
1	**5061025**	1100W 230V	GAGGIA 11004667	TITANIUM
2	**5025969**	1100/437W 230V	GAGGIA 282058858	SYNCRONYCOMPACT - TITANIUMSILVER
3	**1048031**	1300W 230V	GAGGIA 11011341	ACCADEMIA - CAPPUCCINO XTWO - PLATINUM
4	**5058557**	1300W 230V	GAGGIA 11013735	ACCADEMIA - BRERA - UNICA
5	**1048082**	1300W 120V	GAGGIA 11023153	ACCADEMIA - BRERA - UNICA
6	**1048074**	1900W 230V	GAGGIA 17000346	CAREZZA DELUXE

CALDAIE JURA
BOILERS JURA
THERMOBLOCK JURA
CALDERAS JURA

1

2

3

Photo	LF Code	Watt - Volt	Suitable for	For machine model
1	**1048075**	1400W 230V	JURA 63511	C5 - E10 - E20 - E25 - E80 - E85 - F5 - F50 - F70 - F9 - XF50 - XF70
2	**1048077**	1200W 230V	JURA 64893	X5 - Z5 - Z7
3	**1048076**	1200W 230V	JURA 59946	SUBITO

CALDAIE KRUPS
BOILERS KRUPS
THERMOBLOCK KRUPS
CALDERAS KRUPS

1

Photo	LF Code	Watt - Volt	Suitable for	For machine model
1	**1048079**	1200W 230V	KRUPS MS-0075957	CITIZ

CALDAIE PAVONI
BOILERS PAVONI
THERMOBLOCK PAVONI
CALDERINES PAVONI

1

2

Photo	LF Code	Watt - Volt	Suitable for	For machine model
1	**5008254**	---	PAVONI 31104702	EUROPICCOLA - PROFESSIONAL - ROMANTICA - STRADIVARI
2	**1186483**	---	PAVONI 362019	EUROPICCOLA - PROFESSIONAL - ROMANTICA - STRADIVARI

CALDAIE QUICK MILL
BOILERS QUICK MILL
THERMOBLOCK QUICK MILL
CALDERINES QUICK MILL

1

Photo	LF Code	Watt - Volt	Suitable for	For machine model
1	**1048073**	---	QUICK MILL AL0900SCL	03035 PEGASO - 0820 - 0835

CALDAIE RANCILIO
BOILERS RANCILIO
THERMOBLOCK RANCILIO
CALDERINES RANCILIO

1

2

3

4

Photo	LF Code	Watt - Volt	Suitable for	For machine model
1	**5031156**	1100W 230V	RANCILIO 10705637	SILVIA - NANCY - AUNDREY
2	**5055573**	800W 110V	RANCILIO 10705636	SILVIA - NANCY - AUNDREY
3	**1186457**	---	RANCILIO 36405001	SILVIA - NANCY - AUNDREY
4	**5006702**	---	RANCILIO 36220023	SILVIA - NANCY - AUNDREY

CALDAIE SAECO
BOILERS SAECO
THERMOBLOCK SAECO
CALDERINES SAECO

1

2

3

4

5

6

Photo	LF Code	Watt - Volt	Suitable for	For machine model
1	**1048012**	1100W 230V	SAECO 282058758	ROYALCLASSIC - ROYALDIGITAL
2	**5025969**	1100/437W 230V	SAECO 282058858	ROYALPROFESSIONAL - SPIDEMVILLA - TREVI - VIENNADELUXE
3	**5061025**	1100W 230V	SAECO 11004667	ROYAL PROFESSIONAL
4	**1048031**	1300W 230V	SAECO 11011341	ODEA - SYNTIA
5	**5058557**	1300W 230V	SAECO 11013735	EXPRELIA - ROYAL NEW - SYNTIA - XELSIS - XSMALL
5	**1048082**	1300W 120V	SAECO 11023153	EXPRELIA - ROYAL NEW - SYNTIA - XELSIS - XSMALL
6	**1048074**	1900W 230V	SAECO 17000346	INTELIA - MOLTIO

CALDAIE SAECO
BOILERS SAECO
THERMOBLOCK SAECO
CALDERINES SAECO

1 - RECOMMEN.

2 - SUITABLE

3 - 120V

4

5

6

Photo	LF Code	Watt - Volt	Suitable for	For machine model
1	**1048004**	437/1090W 230V	SAECO 421941309121	INCANTO - MAGICCOMFORTPLUS - ROYALDIGITAL - ROYALOFFICE
2	**1048994**	437/1090W 230V	SAECO	INCANTO - MAGICCOMFORTPLUS - ROYALDIGITAL - ROYALOFFICE
3	**5500492**	275/1090W 120V	SAECO 9019.A61.00F	INCANTO - MAGICCOMFORTPLUS - ROYALDIGITAL - ROYALOFFICE
4	**1048006**	1100W 230V	SAECO 9010.142.00A	ROYALPROFESSIONAL
5	**5054837**	1100W 230V	SAECO 11010390	ROYAL PROFESSIONAL
6	**1755130**	1000W 230V	SAECO 288140458	CAFECREMA - CAFENOVA - INCANTO - TREVI

CAPPUCCINATORI INOX
STAINLESS STEEL CAPPUCCINATORE
CAPPUCCINOMASCHINEN EDELSTAHL
MÁQUINAS PARA CAPPUCCINO INOX

1

2

Photo	LF Code	Suitable for	Notes
1	**1079026**	ELEKTRA - SPAZIALE	VERTICAL - VERTICALE
2	**1079027**	UNIVERSAL	HORIZONTAL - ORIZZONTALE

CAPPUCCINATORI MINI
CAPPUCCINATORE MINI
CAPPUCCINOMASCHINEN MINI
MÁQUINAS PARA CAPPUCCINO MINI

1

2

3

4

5

Photo	LF Code	Suitable for
1	**1079001**	BRASILIA - GRIMAC - SAECO
2	**1079008**	GRIMAC - PAVONI - RDL - SAECO - SPINEL
3	**1079018**	BFC - BRASILIA - GRIMAC - SAECO
4	**5500786**	BRASILIA - GRIMAC - SAECO
5	**1079015**	GRIMAC - PAVONI - RDL - SAECO - SPINEL

CAPPUCCINATORI STANDARD
CAPPUCCINATORE STANDARD
CAPPUCCINOMASCHINEN STANDARD
MÁQUINAS PARA CAPPUCCINO STANDARD

1

2

3

Photo	LF Code	Suitable for
1	**1079022**	ASTORIA/CMA - CARIMALI - NUOVA SIMONELLI - WEGA
2	**1079002**	BRASILIA - BRUGNETTI - CARIMALI - NUOVA SIMONELLI
3	**1079006**	UNIVERSAL

CAPPUCCINATORI VARI
VARIOUS CAPPUCCINATORE
CAPPUCCINOMASCHINEN VERSCHIEDEN
MÁQUINAS PARA CAPPUCCINO VARIADAS

1

2

3

4

5

6

Photo	LF Code	Suitable for
1	**1079016**	BIANCHI - SAN MARCO
2	**1079030**	ASTORIA/CMA - MCE - ORCHESTRALE
3	**1079023**	ASTORIA/CMA - CARIMALI - NUOVA SIMONELLI - WEGA
4	**1079010**	SAECO
5	**5501292**	PAVONI
6	**1079029**	GAGGIA - SAECO

CAPPUCCINATORI VARI
VARIOUS CAPPUCCINATORE
CAPPUCCINOMASCHINEN VERSCHIEDEN
MÁQUINAS PARA CAPPUCCINO VARIADAS

1

2

Photo	LF Code	Suitable for
1	**5059581**	DELONGHI
2	**1079028**	JURA

CASSETTI BATTIFONDI BARISTAPRO
KNOCKBOXES BARISTAPRO
KAFFEESATZBEHÄLTER BARISTAPRO
CAJÓNES RESIDUOS DE CAFÉ BARISTAPRO

1

2

3

4

5

6

Photo	LF Code	Material	Dimensions (mm)
1	**5092769**	STAINLESS STEEL - INOX	425x280x100 mm
2	**5092767**	STAINLESS STEEL - INOX	360x215x85 mm
3	**1480020**	STAINLESS STEEL - INOX	370x280x85 mm
4	**5092766**	STAINLESS STEEL - INOX	370x265x85 mm
5	**5092768**	STAINLESS STEEL - INOX	225x165x95 mm
6	**5092765**	STAINLESS STEEL - INOX	245x245x152 mm

CASSETTI BATTIFONDI LF
KNOCK BOX DRAWERS LF
KAFFEESATZBEHÄLTER LF
CAJÓNES RESIDUOS DE CAFÉ LF

1

2

3

4

Photo	LF Code	Material	Dimensions (mm)
1	**1480200**	STAINLESS STEEL - INOX	355x250x85
2	**1080170**	STAINLESS STEEL - INOX	350x250x90
3	**1080270**	STAINLESS STEEL - INOX	250x180x90
4	**1480004**	STAINLESS STEEL - INOX	220x160x105

Personalizzabili
Customizable
personalisierbar
Personalizables

CASSETTI BATTIFONDI CONCEPT-ART SERIE EXCLUSIVE
KNOCK BOX DRAWERS CONCEPT-ART SERIES EXCLUSIVE
KAFFEESATZBEHÄLTER CONCEPT-ART SERIE EXCLUSIVE
CAJONES RESIDUOS CAFÉ CONCEPT-ART SERIE EXCLUSIVE

1

2

3

4

Photo	LF Code	Material	Dimensions (mm)
1	**1480752**	STAINLESS STEEL - INOX	305x365x105
2	**1480753**	STAINLESS STEEL - INOX	450x320x105
3	**1480754**	STAINLESS STEEL - INOX	370x280x105
4	**1480755**	STAINLESS STEEL - INOX	305x235x105

CASSETTI BATTIFONDI CONCEPT-ART SERIE METAL
KNOCK BOX DRAWERS CONCEPT-ART SERIES METAL
KAFFEESATZBEHÄLTER CONCEPT-ART SERIE METAL
CAJONES RESIDUOS CAFÉ CONCEPT-ART SERIE METAL

1

2

Photo	LF Code	Material	Dimensions (mm)
1	**1480758**	STAINLESS STEEL - INOX	265x200x85
2	**1480756**	STAINLESS STEEL - INOX	315x270x85

CASSETTI BATTIFONDI CONCEPT-ART SERIE BASIC
KNOCK BOX DRAWERS CONCEPT-ART SERIES BASIC
KAFFEESATZBEHÄLTER CONCEPT-ART SERIE BASIC
CAJONES RESIDUOS CAFÉ CONCEPT-ART SERIE BASIC

1

2

3

4

Photo	LF Code	Material	Dimensions (mm)
1	**1480766**	PLASTIC - PLASTICA	ø 119x102
2	**1480767**	PLASTIC - PLASTICA	ø 119x102
3	**1480768**	PLASTIC - PLASTICA	ø 119x102
4	**1480005**	MARMO - MARBLE	ø 148x151

CASSETTI BATTIFONDI CONCEPT-ART
KNOCK BOX DRAWERS CONCEPT-ART
KAFFEESATZBEHÄLTER CONCEPT-ART
CAJONES RESIDUOS CAFÉ CONCEPT-ART

1

2

Photo	LF Code	Material	Dimensions (mm)
1	**1480761**	ALUMINIUM - ALLUMINIO	115x115x130
2	**1480760**	STAINLESS STEEL - INOX	180x140x115

CASSETTI BATTIFONDI CONCEPT-ART SERIE CLASSIC
KNOCK BOX DRAWERS CONCEPT-ART SERIES CLASSIC
KAFFEESATZBEHÄLTER CONCEPT-ART SERIE CLASSIC
CAJONES RESIDUOS CAFÉ CONCEPT-ART SERIE CLASSIC

1

2

Photo	LF Code	Material	Dimensions (mm)
1	**1480764**	WOOD/PLASTIC - LEGNO/PLASTICA	132x132x135
2	**1480763**	WOOD/PLASTIC - LEGNO/PLASTICA	135x135x135

CASSETTI BATTIFONDI CONCEPT-ART DA INCASSO
KNOCK BOX DRAWERS CONCEPT-ART BUILT-IN SERIES
EINBAU-KAFFEESATZBEHÄLTER CONCEPT-ART
CAJONES RESIDUOS CAFÉ CONCEPT-ART DE ENCAJE

1

Photo	LF Code	Material	Mounting hole (mm)
1	**1480770**	STAINLESS STEEL - INOX	146x146

CASSETTI BATTIFONDI LF
KNOCK BOX DRAWERS LF
ABKLOPF-SCHUBLADEN LF
CAJÓNES RESIDUOS DE CAFÉ LF

1

2

3

Photo	LF Code	Material	Dimensions (mm)
1	**1080370**	STAINLESS STEEL - INOX	175x165x155
2	**1080371**	STAINLESS STEEL - INOX	170x160x150
3	**1080914**	STAINLESS STEEL - INOX	175x161x97

Personalizzabili
Customizable
personalisierbar
Personalizables

CASSETTI BATTIFONDI MOTTA
KNOCK BOX DRAWERS MOTTA
KAFFEESATZBEHÄLTER MOTTA
CAJONES RESIDUOS CAFÉ MOTTA

1

2

Photo	LF Code	Material	Dimensions (mm)
1	**1080162**	STAINLESS STEEL - INOX	ø 170x110
2	**1080163**	STAINLESS STEEL - INOX	ø 110x150

Personalizzabili
Customizable
personalisierbar
Personalizables

CASSETTI E SPORTELLI PRIOLINOX
KNOCK BOX DRAWERS AND DOORS PRIOLINOX
KAFFEESATZBEHÄLTER UND -TÜREN PRIOLINOX
CAJONES Y PUERTAS PRIOLINOX

1

2

3

4

5

Photo	LF Code	Dimensions (mm)	Mounting hole (mm)
1	**3080002**	347x405x132	350x130
2	**3080006**	347x405x132	350x130
3	**3080001**	345x240x270	345x278
4	**3080011**	345x240x270	345x278
5	**3080003**	ø 39x320	SUGGESTED - CONSIGLIATO
5	**3080903**	ø 39x320	SUITABLE - COMPATIBILE

Il 3080011 ha il foro posteriore per la caduta dei fondi caffè
LF Code 3080011 has a rear hole for coffee grounds
LF 3080011 hat ein Hintenloch für Kaffeesätze
LF 3080011 tiene un agujero trasero para los residuos café

CASSETTI E SPORTELLI PRIOLINOX
DRAWERS AND DOORS PRIOLINOX
SCHUBLADEN UND TÜREN PRIOLINOX
CAJONES Y PUERTAS PRIOLINOX

1

2

3

4

Photo	LF Code	Dimensions (mm)	Mounting hole (mm)
1	**3080014**	345x352x277	345x277
2	**3080013**	440x310x590	437x592
3	**3386017**	---	590x440
4	**3386018**	---	590x440

CASSETTI BATTIFONDI RONDA
KNOCK BOX DRAWERS RONDA
KAFFEESATZBEHÄLTER RONDA
CAJONES RESIDUOS CAFÉ RONDA

RONDA

1

2

3

Photo	LF Code	Dimensions (mm)	Mounting hole (mm)
1	**3080100**	377x299x233	354x276
2	**3080101**	277x599x379	354x573
3	**2102741**	311	---

Il 3080101 ha il foro posteriore per la caduta dei fondi caffè
LF Code 3080101 has a rear hole for coffee grounds
LF 3080101 hat ein Hintenloch für Kaffeesätze
LF 3080101 tiene un agujero trasero para los residuos café

CASSETTO PER BUSTE THE CONCEPT-ART
DRAWERS FOR TEA BAGS CONCEPT-ART
SCHUBLADEN FÜR TEEBEUTEL CONCEPT-ART
CAJONES PARA BOLSAS DE TÉ CONCEPT-ART

concept-art

1

Photo	LF Code	Material	Capacity
1	**1480751**	WOOD - LEGNO	6 THE TYPE

CENTRALINE ASTORIA/CMA
CONTROL BOXES ASTORIA/CMA
ELEKTRONIK-BOXEN ASTORIA/CMA
CENTRALITAS ASTORIA/CMA

1

2

3

4

5

Photo	LF Code	For machines with no. of groups	Power supply	Suitable for	For machine model
1	**1054010**	1-2-3	230V	ASTORIA/CMA 18090031	ARGENTA - BRAVA - DENISE - DIVINA - DORA - LISA
1	**5050256**	1-2-3	120V	ASTORIA/CAM 18090030	ARGENTA - BRAVA - DENISE - DIVINA - DORA - LISA
2	**1054011**	4	230V	ASTORIA/CMA 18090028	ARGENTA - BRAVA - DENISE - DIVINA - DORA - LISA
2	**1054023**	1-2-3	230V	ASTORIA/CMA 18076 - 18079	ARGENTA - BRAVA - DENISE - DIVINA - DORA - LISA
2	**1054012**	1-2-3	230V	ASTORIA/CAM 18090048	GLORIA - GLORIA R12 - SIBILLA
2	**1054052**	1-2-3-4	230V	ASTORIA/CMA 18090080	GLORIA
2	**1054300**	1-2-3	230V	ASTORIA/CMA 18090016	ARGENTA - BRAVA - DENISE - DIVINA - DORA - LISA
2	**5056979**	1-2-3	120V	ASTORIA/CMA 18090017	ARGENTA - BRAVA - DENISE - DIVINA - DORA - LISA
3	**5033610**	3	230V	ASTORIA/CMA 18090052	GLORIA DISPLAY - SIBILLA DISPLAY
4	**1341312**	1	230V	ASTORIA/CMA 18045001	CK-CKX
5	**5054927**	1	230V	ASTORIA/CMA 18090068	CK-CKE - CKX-CKXE
5	**5037991**	1	230V	ASTORIA/CMA 18090066	PERLA JUNIOR

CENTRALINE BEZZERA
CONTROL BOXES BEZZERA
ELEKTRONIK-BOXEN BEZZERA
CENTRALITAS BEZZERA

1

2

Photo	LF Code	For machines with no. of groups	Power supply	Suitable for	For machine model
1	**1054026**	1-2	230V	BEZZERA 7662505	B2000DE - B2000TE - B4000DE - ELLISSEDE - ELLISSETE
1	**1054027**	1-2-3	230V	BEZZERA 7662529	B2000TE - ELLISSETE
1	**1054060**	1-2-3	230V	BEZZERA 7662739.01	B6000
2	**5023522**	1	230V	BEZZERA 7662651.01	BZ07 - BZ07 NEW - BZ13 - BZ35 - BZ40

CENTRALINE BFC
CONTROL BOXES BFC
ELEKTRONIK-BOXEN BFC
CENTRALITAS BFC

1

2

3

4

5

Photo	LF Code	For machines with no. of groups	Power supply	Suitable for	For machine model
1	**5055048**	1-2-3	230V	BFC 5030100	DELUX - IMOLA - LIRA - MARANELLO - MONZA
2	**5059540**	2-3	230V	BFC 5030080	CLASSICA - GRANDOGE - LA VITTORIA - OPERA
3	**5049564**	1	230V	BFC 5030011	LIRA
4	**7105437**	2	230V	BFC 5030115	CLASSICA - LA VITTORIA
5	**1054063**	1	230V	BFC 5030010	LIRA

CENTRALINE BIANCHI
CONTROL BOXES BIANCHI
ELEKTRONIK-BOXEN BIANCHI
CENTRALITAS BIANCHI

1

2

Photo	LF Code	For machines with no. of groups	Power supply	Suitable for	For machine model
1	**5058987**	2-3	230V	BIANCHI 26056816	LUCIA
2	**1054051**	2	230V	BIANCHI 26053716	SOFIA

CENTRALINE BRUGNETTI/AURORA
CONTROL BOXES BRUGNETTI/AURORA
ELEKTRONIK-BOXEN BRUGNETTI/AURORA
CENTRALITAS BRUGNETTI/AURORA

1

2

3

Photo	LF Code	For machines with no. of groups	Power supply	Suitable for	For machine model
1	**5048271**	2	230V	BRUGNETTI/AURORA 550.9.5.25.02	ALEXIA
2	**5033337**	2	230V	BRUGNETTI/AURORA 88.1.13.01	C
3	**5065886**	1	230V	BRUGNETTI/AURORA 600.9.9.06.30G	VIOLA

CENTRALINE CARIMALI
CONTROL BOXES CARIMALI
ELEKTRONIK-BOXEN CARIMALI
CENTRALITAS CARIMALI

1

2

Photo	LF Code	For machines with no. of groups	Power supply	Suitable for	For machine model
1	**1054038**	1-2-3	230V	CARIMALI 96.00475	ECOLUX - TEMA
2	**5031224**	2-3	230V	CARIMALI 96.00415	ETABETALM
1	**5039681**	1-2-3	230V	CARIMALI 96.00821	ETABETAV2 - E9ESPRESSO - KIKKO - TEMASTYLE
2	**5051761**	2	230V	CARIMALI 96.00860	PRATICA

CENTRALINE ECM
CONTROL BOXES ECM
ELEKTRONIK-BOXEN ECM
CENTRALITAS ECM

1

Photo	LF Code	For machines with no. of groups	Power supply	Suitable for	For machine model
1	**1054005**	1-2-3	230V	ECM C190003639	LAURA - RAFFAELLO NEW
1	**5024846**	1-2-3	230V	ECM C100002807	MICHELANGELO - RAFFAELLO OLD - VENEZIANO

CENTRALINE EXPOBAR
CONTROL BOXES EXPOBAR
ELEKTRONIK-BOXEN EXPOBAR
CENTRALITAS EXPOBAR

1

2

Photo	LF Code	For machines with no. of groups	Power supply	Suitable for	For machine model
1	**5059242**	1-2-3	230V	EXPOBAR 60100034	ELEN LUX - G10 - MARKUS SILVER - MARKUS LUX - MEGACREM
1	**1054034**	1-2-3	230V	EXPOBAR 60100410	ELEN XLC - G10 XLC - MARKUS XLC - MONROC - NEW ELEGANCE
2	**1054035**	2	230V	EXPOBAR 60100014	MONROC

CENTRALINE FIAMMA RST
CONTROL BOXES FIAMMA RST
ELEKTRONIK-BOXEN FIAMMA RST
CENTRALITAS FIAMMA RST

1

Photo	LF Code	For machines with no. of groups	Power supply	Suitable for	For machine model
1	**1054058**	1-2-3	230V	FIAMMA 4.0.000.0953	ATLANTIC - PRESTIGE

CENTRALINE FIORENZATO CS
CONTROL BOXES FIORENZATO CS
ELEKTRONIK-BOXEN FIORENZATO CS
CENTRALITAS FIORENZATO CS

1

Photo	LF Code	For machines with no. of groups	Power supply	Suitable for	For machine model
1	**1054025**	2-3	230V	FIORENZATO A1500070	DUCALE - FENICE - LIDO - MURANO - RIALTO - VENEZIA (STD)
1	**1054050**	2-3	230V	FIORENZATO A1500095	DUCALE - FENICE - MURANO - RIALTO (ECO)

CENTRALINE FRACINO
CONTROL BOXES FRACINO
KONTROL-ELEKTRONIK-BOXE FRACINO
CENTRALITAS CONTROL FRACINO

1

Photo	LF Code	For machines with no. of groups	Power supply	Suitable for	For machine model
1	**1054059**	1-2-3	230V	FRACINO FC91/3/3D5MAE-STRO	ROMANO

CENTRALINE FUTURMAT
CONTROL BOXES FUTURMAT
ELEKTRONIK-BOXEN FUTURMAT
CENTRALITAS FUTURMAT

1

Photo	LF Code	For machines with no. of groups	Power supply	Suitable for	For machine model
1	**1054551**	1-2-3-4	230V	FUTURMAT 08280307	ARIETE - F3 - RIMINI

CENTRALINE GAGGIA
CONTROL BOXES GAGGIA
ELEKTRONIK-BOXEN GAGGIA
CENTRALITAS GAGGIA

1

2

3

Photo	LF Code	For machines with no. of groups	Power supply	Suitable for	For machine model
1	**1054558**	2-3	230V	GAGGIA DM1876/002/230	D90
2	**1054517**	4	230V	GAGGIA DM1373/4/220	D90
1	**1054048**	2	230V	GAGGIA DM2182/02/230	D90EVOLUTION - GD - GD COMPACT - XD EVOLUTION
2	**1054046**	1-2-3	230V	GAGGIA 5027001000	DECO DOS
2	**1054047**	1-2-3	230V	GAGGIA 12000669	DECO MAN
1	**1054556**	2-3	230V	GAGGIA DM2123/03/230	XD - FD2000 - FE2000
1	**5055629**	2	230V	GAGGIA 12001194	LC/D
3	**5026244**	1	230V	GAGGIA 5014004000	GD ONE

CENTRALINE GAGGIA SPAGNA
CONTROL BOXES GAGGIA SPAGNA
ELEKTRONIK-BOXEN GAGGIA SPAGNA
CENTRALITAS GAGGIA SPAGNA

1

Photo	LF Code	For machines with no. of groups	Power supply	Suitable for	For machine model
1	**1054551**	1-2-3-4	230V	GAGGIA SPAGNA 08280307	BELLA - G6 - KB - NERA

CENTRALINE GRIMAC
CONTROL BOXES GRIMAC
DOSIERSTEUERUNGEN GRIMAC
CENTRALITAS GRIMAC

1

2

3

4

Photo	LF Code	For machines with no. of groups	Power supply	Suitable for	For machine model
2	**1054101**	2	230V	GRIMAC GRC103 - 1040200008	ECLISSE - G10
2	**1054102**	3	230V	GRIMAC GRT104 - 1040200009	G10
4	**1054025**	2	230V	GRIMAC A1500072	G11
1	**1054043**	1	230V	GRIMAC MG282 - 1040200001	MIA - NEWCIALDAVAPOR
3	**1054042**	2	230V	GRIMAC GRW156 - 1040200013	TWENTY

CENTRALINE ISOMAC
DOSER CONTROL BOXES ISOMAC
DOSIERSTEUERUNGEN ISOMAC
CENTRALITAS ISOMAC

1

Photo	LF Code	For machines with no. of groups	Power supply	Suitable for	For machine model
1	**1054061**	1	230V	ISOMAC IS000601	MILLENNIUM - MONDIALE - TEA

CENTRALINE ITALCREM
CONTROL BOXES ITALCREM
DOSIERSTEUERUNGEN ITALCREM
CENTRALITAS ITALCREM

1

Photo	LF Code	For machines with no. of groups	Power supply	Suitable for	For machine model
1	**1054551**	1-2-3-4	230V	ITALCREM 08280307	CAPRI - IT4

CENTRALINE LAVAZZA
CONTROL BOXES LAVAZZA
DOSIERSTEUERUNGEN LAVAZZA
CENTRALITAS LAVAZZA

1

Photo	LF Code	For machines with no. of groups	Power supply	Suitable for	For machine model
1	**1054048**	2	230V	LAVAZZA 10061861	LB4800
1	**1054051**	2	230V	LAVAZZA 10084202	LB4600

CENTRALINE MAIRALI
CONTROL BOXES MAIRALI
DOSIERSTEUERUNGEN MAIRALI
CENTRALITAS MAIRALI

1

Photo	LF Code	For machines with no. of groups	Power supply	Suitable for	For machine model
1	**1054551**	1-2-3-4	230V	MAIRALI 08280307	ARIANNE - GIULIETTA

CENTRALINE MARZOCCO
CONTROL BOXES MARZOCCO
DOSIERSTEUERUNGEN MARZOCCO
CENTRALITAS MARZOCCO

1

2

3

Photo	LF Code	For machines with no. of groups	Power supply	Suitable for	For machine model
1	**1054044**	2	230V	MARZOCCO LAD070/2	FB/70 - LINEA (10 PIN)
2	**1054013**	3-4	230V	MARZOCCO LAD070/4	FB/70 - LINEA (10 PIN)
2	**1054018**	4	230V	MARZOCCO LAD3D5/4	FB/70 - LINEA (16 PIN)
3	**1054014**	2-3	230V	MARZOCCO LAD3D5/3LC	FB/70 - LINEA (16 PIN)
2	**1054019**	2-3-4	230V	MARZOCCO E.1.001	FB/80 - GB/5 - MISTRAL - STRADA

CENTRALINE MCE
ELECTRONIC CONTROL BOXES MCE
DOSIERSTEUERUNGEN MCE
CENTRALITAS MCE

1

2

Photo	LF Code	For machines with no. of groups	Power supply	Suitable for	For machine model
1	**1054010**	1-2-3	230V	MCE 18090031	START EVD
2	**1054300**	1-2-3	230V	MCE 18090016	START DISPLAY

CENTRALINE NUOVA SIMONELLI
CONTROL BOXES NUOVA SIMONELLI
DOSIERSTEUERUNGEN NUOVA SIMONELLI
CENTRALITAS NUOVA SIMONELLI

1

2

3

4

5

6

Photo	LF Code	For machines with no. of groups	Power supply	Suitable for	For machine model
1	**5029454**	1	230V	NUOVA SIMONELLI 04900730	APPIA
2	**5032628**	2	230V	NUOVA SIMONELLI 04900732	APPIA
3	**5054990**	3	230V	NUOVA SIMONELLI 04900733	APPIA
4	**5053783**	2	230V	NUOVA SIMONELLI 04900740	APPIA COMPACT
5	**1390098**	2	230V	NUOVA SIMONELLI 04900713	AURELIA PLUS
5	**1390099**	3-4	230V	NUOVA SIMONELLI 04900714	AURELIA PLUS
4	**5054991**	2	230V	NUOVA SIMONELLI 04900715	AURELIA V
6	**5049316**	2-3	230V	NUOVA SIMONELLI 04900716	AURELIA V

CENTRALINE ORCHESTRALE
CONTROL BOXES ORCHESTRALE
DOSIERSTEUERUNGEN ORCHESTRALE
CENTRALITAS ORCHESTRALE

1

Photo	LF Code	For machines with no. of groups	Power supply	Suitable for	For machine model
1	**1054052**	1-2-3-4	230V	ORCHESTRALE D18090116	ETNICA - PHONICA

CENTRALINE PAVONI
CONTROL BOXES PAVONI
DOSIERSTEUERUNGEN PAVONI
CENTRALITAS PAVONI

1

Photo	LF Code	For machines with no. of groups	Power supply	Suitable for	For machine model
1	**1054022**	2	230V	PAVONI 438264	BAR - BART - PUB
1	**1054037**	3	230V	PAVONI 438265	BAR - BART - PUB

CENTRALINE PROMAC
CONTROL BOXES PROMAC
DOSIERSTEUERUNGEN PROMAC
CENTRALITAS PROMAC

1

Photo	LF Code	For machines with no. of groups	Power supply	Suitable for	For machine model
1	**5039219**	1-2-3	230V	PROMAC 34070188	COMPACT ME - COMPACT PU - GREEN ME - GREEN PU
1	**5049432**	2-3	230V	PROMAC 34070208	GREEN PLUS - GREEN TALL

CENTRALINE RANCILIO
CONTROL BOXES RANCILIO
DOSIERSTEUERUNGEN RANCILIO
CENTRALITAS RANCILIO

1

Photo	LF Code	For machines with no. of groups	Power supply	Suitable for	For machine model
1	**1341631**	1	230V	RANCILIO 34070026	L7/DE - S10/DE

CENTRALINE RENEKA
CONTROL BOXES RENEKA
DOSIERSTEUERUNGEN RENEKA
CENTRALITAS RENEKA

1

2

3

Photo	LF Code	For machines with no. of groups	Power supply	Suitable for	For machine model
1	**1054581**	1-2-3	230V	RENEKA 9003679	LC - VIVAE - VIVAS
2	**1054583**	4	230V	RENEKA 9002818	PLUSPRESTIGE - XLBASIC
3	**1054029**	3	230V	RENEKA 9003675	VIVA - XLBASIC - XLPALLAS

CENTRALINE ROYAL
CONTROL BOXES ROYAL
ELEKTRONIK-BOXEN ROYAL
CENTRALITAS ROYAL

1

2

3

4

5

Photo	LF Code	For machines with no. of groups	Power supply	Suitable for	For machine model
1	**5055048**	1-2-3	230V	ROYAL 5030100	SYNCHRO
2	**5059540**	2-3	230V	ROYAL 5030080	DIADEMA - DOGARESSA - TECNICA
3	**5049564**	1	230V	ROYAL 5030011	LA VITTORIA - SYNCHRO
4	**7105437**	2	230V	ROYAL 5030115	DIADEMA
5	**1054063**	1	230V	ROYAL 5030010	SYNCHRO - VALLELUNGA

CENTRALINE SAECO
CONTROL BOXES SAECO
ELEKTRONIK-BOXEN SAECO
CENTRALITAS SAECO

1

Photo	LF Code	For machines with no. of groups	Power supply	Suitable for	For machine model
1	**1054048**	2	230V	SAECO DM2181/02/230	AROMASE

CENTRALINE SAN MARCO
CONTROL BOXES SAN MARCO
ELEKTRONIK-BOXEN SAN MARCO
CENTRALITAS SAN MARCO

1

2

3

Photo	LF Code	For machines with no. of groups	Power supply	Suitable for	For machine model
1	**1054016**	1-2	230V	SAN MARCO 108412	95PRACTICALE - 95SPRINTE
1	**5004515**	2	230V	SAN MARCO 108409	92/22
1	**1054024**	1-2-3-4	230V	SAN MARCO 108543	85PRACTICALS - 85S
1	**1054017**	1-2	230V	SAN MARCO 108541	85PRACTICALE - 85SPRINTE
1	**5030943**	3-4	230V	SAN MARCO 108542	85E
1	**1054402**	2-3-4	230V	SAN MARCO 108754	105S
1	**1054403**	2-3-4	230V	SAN MARCO 108755	105E
1	**1054401**	2-3-4	230V	SAN MARCO 108783	105D
2	**5033150**	1-2-3	230V	SAN MARCO 108650	100S
2	**1054020**	1	230V	SAN MARCO 108651	100PRACTICALE
3	**1054015**	2-3-4	230V	SAN MARCO 108652	100SPRINTE - 100E

CENTRALINE SANREMO
CONTROL BOXES SANREMO
ELEKTRONIK-BOXEN SANREMO
CENTRALITAS SANREMO

1

2

Photo	LF Code	For machines with no. of groups	Power supply	Suitable for	For machine model
1	**1054057**	1-2-3	230V	SANREMO 10112072E	AMALFI - CAPRI - MILANO - TORINO - ZOE
2	**5038880**	2	230V	SANREMO 10112091D	CAPRI - FIRENZE - MILANO - MOTECARLO - VENEZIA

CENTRALINE SCALA
CONTROL BOXES SCALA
ELEKTRONIK-BOXEN SCALA
CENTRALITAS SCALA

1

2

3

Photo	LF Code	For machines with no. of groups	Power supply	Suitable for	For machine model
2	**5034940**	1-2	230V	SCALA C-0015/24N	BUTTERFLY - EROICA
1	**5026202**	1-2-3	230V	SCALA C-0148	CARMENA
1	**1341005**	1-2-3	230V	SCALA C-0147	CARMENS
3	**5036868**	1-2-3	230V	SCALA C-0715	EROICA - IRIS - NORMA

CENTRALINE SPAZIALE
CONTROL BOXES SPAZIALE
ELEKTRONIK-BOXEN SPAZIALE
CENTRALITAS SPAZIALE

1

2

3

Photo	LF Code	For machines with no. of groups	Power supply	Suitable for	For machine model
1	**1054566**	2	230V	SPAZIALE 02473	NEWEK
3	**1054009**	3	230V	SPAZIALE 03200	NEWEK
2	**1054008**	2	230V	SPAZIALE 08570	S5COMPACT

CENTRALINE UNIVERSALI
CONTROL BOXES UNIVERSAL
ELEKTRONIK-BOXEN UNIVERSELL
CENTRALITAS UNIVERSALES

1

2

Photo	LF Code	For machines with no. of groups	Power supply	Code GICAR
1	**1054502**	1-2 ET30	230V	9.5.24.00G00
2	**5024305**	RL30 MICRO ST	230V	9.1.40.52G00

CENTRALINE VIBIEMME
CONTROL BOXES VIBIEMME
ELEKTRONIK-BOXEN VIBIEMME
CENTRALITAS VIBIEMME

1

2

3

4

5

6

Photo	LF Code	For machines with no. of groups	Power supply	Suitable for	For machine model
1	**1054053**	3	230V	VIBIEMME ELETDOSKIMREP	CHIMAERA - REPLICA
2	**1054006**	3	230V	VIBIEMME ELETDOS3GRCTT	CUBO - EVOLUTION - MINIMAX - REPLICA - REVOLUTION
3	**1054056**	2-3	230V	VIBIEMME ELETDOSRECUMP	CUBO - EVOLUTION - REVOLUTION
4	**1341007**	1	230V	VIBIEMME ELETDOS30	DOMOBARSUPER - KOMETA
2	**1054001**	2	230V	VIBIEMME ELETDOS3D2GSI	DOSAPLUS - KOMETA - SILVER
2	**1054004**	3	230V	VIBIEMME ELETDOS3D3GSI	DOSAPLUS - KOMETA - MERCURY - SILVER
6	**1054054**	1-2	230V	VIBIEMME ELETDOSKORINE	LOLLO
5	**1054055**	3	230V	VIBIEMME ELETDOSPID23G	REPLICA

CENTRALINE VISACREM
CONTROL BOXES VISACREM
ELEKTRONIK-BOXEN VISACREM
CENTRALITAS VISACREM

1

Photo	LF Code	For machines with no. of groups	Power supply	Suitable for	For machine model
1	**1054551**	1-2-3-4	230V	VISACREM 08280307	BRAVA - NERA - V6

CENTRALINE WEGA
CONTROL BOXES WEGA
ELEKTRONIK-BOXEN WEGA
CENTRALITAS WEGA

1

2

3

4

5

Photo	LF Code	For machines with no. of groups	Power supply	Suitable for	For machine model
1	**1054010**	1-2-3	230V	WEGA WY18090031	COLOSSEUM - ESPRESSA - START - SYNTESIS
1	**5050256**	1-2-3	110V	WEGA WY18090030	COLOSSEUM - ESPRESSA - START - SYNTESIS
2	**1054300**	1-2-3	230V	WEGA WY18090016	COLOSSEUM - START - SYNTESIS - VENUS
2	**5056979**	1-2-3	110V	WEGA WY18090017	COLOSSEUM - START - SYNTESIS - VENUS
3	**1054023**	1-2-3	230V	WEGA WY18079	EVD
3	**1054012**	1-2-3	230V	WEGA WY18090048	POLARIS
4	**1341312**	1	230V	WEGA WY18045001	MININOVA
5	**5054927**	1	230V	WEGA WY18090068	MININOVA

COMMUTATORI ASTORIA/CMA
SELECTOR SWITCHES ASTORIA/CMA
UMSCHALTER ASTORIA/CMA
CONMUTADORES ASTORIA/CMA

1

2

3

4

Photo	LF Code	Positions number	Contact capacity	Suitable for	For machine model
1	**1319001**	0-1	20A 690V	ASTORIA/CMA 18201 - 18211	ARGENTA - DENISE - DORA - GLORIA - LISA -PRATIC
2	**1057542**	0-2	25A 690V	ASTORIA/CMA 18104	ARGENTA - DENISE - DORA - GLORIA - LISA -PRATIC
3	**1057541**	0-1	32A 690V	ASTORIA/CMA 18207	ARGENTA - DENISE - DORA - GLORIA - LISA -PRATIC
4	**1057543**	0-2	32A 690V	ASTORIA/CMA 18105	ARGENTA - DENISE - DORA - GLORIA - LISA -PRATIC

COMMUTATORI BEZZERA
SELECTOR SWITCHES BEZZERA
UMSCHALTER BEZZERA
CONMUTADORES BEZZERA

1

2

Photo	LF Code	Positions number	Contact capacity	Suitable for	For machine model
1	**1319041**	0-1	25A 380V	BEZZERA 7633315	B2000 - B2000AL - B2000TE - B2000DE
2	**1057401**	0-2	20A 600V	BEZZERA 7633301	ELLISSE - ELLISSE AL

COMMUTATORI BFC
SELECTOR SWITCHES BFC
UMSCHALTER BFC
CONMUTADORES BFC

1

2

Photo	LF Code	Positions number	Contact capacity	Suitable for	For machine model
1	**1057022**	0-1	25A 690V	BFC 5005120	LIRA
2	**1057041**	0-2	20A 300VAC	BFC 5005020	CLASSICA - DELUX - GRANDOGE - IMOLA - LA VITTORIA - LIRA

COMMUTATORI BIANCHI
SELECTOR SWITCHES BIANCHI
UMSCHALTER BIANCHI
CONMUTADORES BIANCHI

1

Photo	LF Code	Positions number	Contact capacity	Suitable for	For machine model
1	**1057032**	0-2	20A 600V	BIANCHI 26055626	LUCIA - SARA

COMMUTATORI BRASILIA
SELECTOR SWITCHES BRASILIA
UMSCHALTER BRASILIA
CONMUTADORES BRASILIA

1

2

3

Photo	LF Code	Positions number	Contact capacity	Suitable for	For machine model
1	**1319531**	0-2	16A 600V	BRASILIA 24442.8.00.09	CENTURY - CENTURY RESTYLING - GRADISCA - PORTOFINO
2	**1319012**	0-2	20A 690V	BRASILIA 17213.2.00.08	BELLEEPOQUE - FIRENZESL - ROMA
3	**1057531**	0-5	---	BRASILIA 01814.2.00.08	BELLEEPOQUE

COMMUTATORI CASADIO
SELECTOR SWITCHES CASADIO
UMSCHALTER CASADIO
CONMUTADORES CASADIO

1

Photo	LF Code	Positions number	Contact capacity	Suitable for	For machine model
1	**1057004**	0-2	20A 690V	CASADIO 532020208	DODICIA - DODICIS

COMMUTATORI CIMBALI
SELECTOR SWITCHES CIMBALI
UMSCHALTER CIMBALI
CONMUTADORES CIMBALI

1

2

3

Photo	LF Code	Positions number	Contact capacity	Suitable for	For machine model
1	**1319017**	0-1	16A 690V	CIMBALI 532-004-300	M20 - M21 - M22 - M27 - M28 - M29 - M30 - M31 - M32 - M39
2	**1319016**	0-2	20A 690V	CIMBALI 532-011-608	M20 - M21 - M22 - M27 - M28 - M29 - M30 - M31 - M32 - M39
2	**1057004**	0-2	20A 690V	CIMBALI 532-020-208	M27NEW
3	**1057031**	0-1	25A 690V	CIMBALI 532-021-118	M39 - M39GT

COMMUTATORI DELONGHI
SELECTOR SWITCHES DELONGHI
UMSCHALTER DELONGHI
CONMUTADORES DELONGHI

1

2

Photo	LF Code	Positions number	Contact capacity	Suitable for	For machine model
1	**1057036**	0-3	10A 250V	DELONGHI 5132108100	EC155
2	**1057040**	0-2	16A 250V	DELONGHI 5113210841	ECI341 - ECP31.21 - ECP33.21 - EC151.B - EC153.B - EC156.B

COMMUTATORI ELEKTRA
SELECTOR SWITCHES ELEKTRA
UMSCHALTER ELEKTRA
CONMUTADORES ELEKTRA

1

Photo	LF Code	Positions number	Contact capacity	Suitable for	For machine model
1	**1319010**	0-2	20A 690V	ELEKTRA 02020035	BARLUME

COMMUTATORI EXPOBAR
SELECTOR SWITCHES EXPOBAR
UMSCHALTER EXPOBAR
CONMUTADORES EXPOBAR

1

Photo	LF Code	Positions number	Contact capacity	Suitable for	For machine model
1	**1319001**	0-1	20A 690V	EXPOBAR 60900002	DIAMANT -EB61 - G10 - MARKUS - MONROC - NEW ELEGANCE

COMMUTATORI FAEMA
SELECTOR SWITCHES FAEMA
UMSCHALTER FAEMA
CONMUTADORES FAEMA

1

2

3

4

5

Photo	LF Code	Positions number	Contact capacity	Suitable for	For machine model
1	**3059014**	0-1	20A 500V	FAEMA 3761119055	COMPACTA - COMPACTS
2	**1057004**	0-2	20A 690V	FAEMA 532020208	DUE - ENOVA - E61 - E91
3	**1319021**	0-2	16A 690V	FAEMA 2761130012	E64 - E66 - P4 - P6
4	**1057031**	0-1	25A 690V	FAEMA 532021118	EMBLEMA
5	**1319016**	0-2	20A 690V	FAEMA 532011608	EMBLEMA - ENOVA - E98COMPACT

COMMUTATORI FIAMMA RST
SELECTOR SWITCHES FIAMMA RST
UMSCHALTER FIAMMA RST
CONMUTADORES FIAMMA RST

1

Photo	LF Code	Positions number	Contact capacity	Suitable for	For machine model
1	**1057038**	0-2	25A 690V	FIAMMA 5.0.000.0061	ATLANTIC - PRESTIGE

COMMUTATORI FIORENZATO CS
SELECTOR SWITCHES FIORENZATO CS
UMSCHALTER FIORENZATO CS
CONMUTADORES FIORENZATO CS

1

Photo	LF Code	Positions number	Contact capacity	Suitable for	For machine model
1	**1057020**	0-2	25A 600V	FIORENZATO CS A2100316	DUCALE - FENICE - LIDO - PIAZZA SAN MARCO - VENEZIA

COMMUTATORI FUTURMAT
SELECTOR SWITCHES FUTURMAT
UMSCHALTER FUTURMAT
CONMUTADORES FUTURMAT

1

Photo	LF Code	Positions number	Contact capacity	Suitable for	For machine model
1	**1319031**	0-2	16A 250V	FUTURMAT 07847908	ARIETE - CUSTOM - F3 - PALANCA - RIMINI

COMMUTATORI GAGGIA
SELECTOR SWITCHES GAGGIA
UMSCHALTER GAGGIA
CONMUTADORES GAGGIA

1

2

Photo	LF Code	Positions number	Contact capacity	Suitable for	For machine model
1	**3057296**	0-3	32A 690V	GAGGIA WGADM1944	DECO - GD - GE - TD - TE - TN94 - XD - XE
2	**1319066**	0-3	36A 660V	GAGGIA DM1267	D90 - E90

COMMUTATORI GAGGIA SPAGNA
SELECTOR SWITCHES GAGGIA SPAGNA
UMSCHALTER GAGGIA SPAGNA
CONMUTADORES GAGGIA SPAGNA

1

Photo	LF Code	Positions number	Contact capacity	Suitable for	For machine model
1	**1319031**	0-2	16A 250V	GAGGIA SPAGNA 07847908	BELLA - G6 - KB - NERA

COMMUTATORI GRIMAC
SELECTOR SWITCHES GRIMAC
UMSCHALTER GRIMAC
CONMUTADORES GRIMAC

1

2

Photo	LF Code	Positions number	Contact capacity	Suitable for	For machine model
1	**1357200**	0-2	16A 600V	GRIMAC 1160100006 - GR273	ECLISSE - G10 - TEN - TWENTY
2	**1057020**	0-2	25A 600V	GRIMAC A2100316	G11

COMMUTATORI ITALCREM
SELECTOR SWITCHES ITALCREM
UMSCHALTER ITALCREM
CONMUTADORES ALCREM

1

Photo	LF Code	Positions number	Contact capacity	Suitable for	For machine model
1	**1319031**	0-2	16A 250V	ITALCREM 07847908	CAPRI - IT4

COMMUTATORI LAVAZZA
SELECTOR SWITCHES LAVAZZA
SCHALTER LAVAZZA
CONMUTADORES LAVAZZA

1

2

Photo	LF Code	Positions number	Contact capacity	Suitable for	For machine model
1	**1057032**	0-2	20A 600V	LAVAZZA 10084257	LB4600
2	**3057296**	0-3	32A 690V	LAVAZZA 10062022	LB4800

COMMUTATORI MAIRALI
SELECTOR SWITCHES MAIRALI
UMSCHALTER MAIRALI
CONMUNTADORES MAIRALI

1

Photo	LF Code	Positions number	Contact capacity	Suitable for	For machine model
1	**1319031**	0-2	16A 250V	MAIRALI 07847908	ARIANNE - GIULIETTA

COMMUTATORI MARZOCCO
SELECTOR SWITCHES MARZOCCO
UMSCHALTER MARZOCCO
CONMUTADORES MARZOCCO

1

2

3

4

Photo	LF Code	Positions number	Contact capacity	Suitable for	For machine model
1	**1057016**	0-1	32A 690V	MARZOCCO E.2.001	FB/80 - GB/5
2	**1057015**	0-2	16A 300V	MARZOCCO L400/17	FB/70 - LINEA
3	**1057017**	0-2	32A 600V	MARZOCCO L400/32	FB/70 - LINEA
4	**1319807**	0-2	32A 600V	MARZOCCO L400/32T	FB/70 - LINEA

COMMUTATORI NUOVA SIMONELLI
SELECTOR SWITCHES NUOVA SIMONELLI
UMSCHALTER NUOVA SIMONELLI
CONMUTADORES NUOVA SIMONELLI

1

2

Photo	LF Code	Positions number	Contact capacity	Suitable for	For machine model
1	**1319045**	0-1	32A 600V	NUOVA SIMONELLI 04200022	MAC2000 - MACDIGIT - PREMIER - PREMIERMAXI - PROGRAM
2	**1057029**	0-1	20A 690V	NUOVA SIMONELLI 04200015	PREMIER - PREMIERMAXI

COMMUTATORI PAVONI
SELECTOR SWITCHES PAVONI
UMSCHALTER PAVONI
CONMUTADORES PAVONI

1

Photo	LF Code	Positions number	Contact capacity	Suitable for	For machine model
1	**3057296**	0-3	32A 690V	PAVONI 435015	BAR

COMMUTATORI RANCILIO
SELECTOR SWITCHES RANCILIO
UMSCHALTER RANCILIO
CONMUTADORES RANCILIO

1

2

Photo	LF Code	Positions number	Contact capacity	Suitable for	For machine model
1	**1319807**	0-2	32A 600V	RANCILIO 34030025	S20 - Z11
2	**1319047**	0-1	20A 500V	RANCILIO 34030006	Z11

COMMUTATORI ROYAL
SELECTOR SWITCHES ROYAL
UMSCHALTER ROYAL
CONMUTADORES ROYAL

1

2

Photo	LF Code	Positions number	Contact capacity	Suitable for	For machine model
1	**1057022**	0-1	25A 690V	ROYAL 5005120	SYNCHRO
2	**1057041**	0-2	20A 300VAC	ROYAL 5005020	DIADEMA - DOGARESSA - VALLELUNGA - VALLELUNGA LEVA

COMMUTATORI SAB ITALIA
SELECTOR SWITCHES SAB ITALIA
UMSCHALTER SAB ITALIA
CONMUTADORES SAB ITALIA

1

Photo	LF Code	Positions number	Contact capacity	Suitable for	For machine model
1	**1319036**	0-2	20A 690V	SAB ITALIA SVTMC012	ELLIPSE - E96 - JOLLY - MODERNA

COMMUTATORI SAECO
SELECTOR SWITCHES SAECO
UMSCHALTER SAECO
CONMUTADORES SAECO

1

2

Photo	LF Code	Positions number	Contact capacity	Suitable for	For machine model
1	**3057296**	0-3	32A 690V	SAECO WGADM1944	AROMA
2	**1057039**	0-2	13A 250V	SAECO 12000824	NINA - POEMIA

COMMUTATORI SAN MARCO
SELECTOR SWITCHES SAN MARCO
UMSCHALTER SAN MARCO
CONMUTADORES SAN MARCO

1

2

Photo	LF Code	Positions number	Contact capacity	Suitable for	For machine model
1	**1057044**	0-2	32A 600V	SAN MARCO 108136B	LEVA - 105 - 85E - 85S - 95 21/31 - 95 23/33 - 95E
1	**1057044**	0-2	32A 600V	SAN MARCO 108136B	95PRACTICALS - 95S - 95SPRINTE - 95SPRINTS
2	**1057018**	0-2	16A 250V	SAN MARCO 108676	100E - 100PRACTICALE - 100PRACTICALS - 100S - 100SPRINT
2	**1057018**	0-2	16A 250V	SAN MARCO 108676	NEW105E - NEW105PRACTICALE - NEW105PRACTICALS - NEW105S

COMMUTATORI SANREMO
SELECTOR SWITCHES SANREMO
UMSCHALTER SANREMO
CONMUTADORES SANREMO

1

Photo	LF Code	Positions number	Contact capacity	Suitable for	For machine model
1	**1057037**	0-2	20A 600V	SANREMO 10122050	AMALFI - CAPRI - MILANO LX - PISA - TORINO - VENEZIA
1	**5034325**	0-2	20A 600V	SANREMO 10122060	AMALFI - CAPRI - MILANO LX - PISA - TORINO - VENEZIA

COMMUTATORI SCALA
SELECTOR SWITCHES SCALA
UMSCHALTER SCALA
CONMUTADORES SCALA

1

Photo	LF Code	Positions number	Contact capacity	Suitable for	For machine model
1	**1059001**	0-2	32A 600V	SCALA C-0154	CARMEN

COMMUTATORI SPAZIALE
SELECTOR SWITCHES SPAZIALE
UMSCHALTER SPAZIALE
CONMUTADORES SPAZIALE

1

2

3

4

Photo	LF Code	Positions number	Contact capacity	Suitable for	For machine model
1	**1057013**	0-1	20A 600V	SPAZIALE 02620	NEW - RAPID - SELETRON - SPAZIO - S3 - S5 - S5COMPACT
2	**1057014**	0-1	25A 600V	SPAZIALE 00503	NEW - RAPID - SELETRON - SPAZIO - S3 - S5 - S5COMPACT
3	**1057012**	0-1	32A 600V	SPAZIALE 02496	NEW - RAPID - SELETRON - SPAZIO - S3 - S5 - S5COMPACT
4	**1057003**	0-2	20A 600V	SPAZIALE 05694	NEW - RAPID - SPAZIO - S5 COMPACT

COMMUTATORI VIBIEMME
SELECTOR SWITCHES VIBIEMME
UMSCHALTER VIBIEMME
CONMUTADORES VIBIEMME

1

2

3

Photo	LF Code	Positions number	Contact capacity	Suitable for	For machine model
1	**1057034**	0-3	16A 300V	VIBIEMME ELETCOM4STADI	CHIMAERA - CUBO - EVOLUTION - REPLICA - REVOLUTION
2	**1057035**	0-2	16A 300V	VIBIEMME ELETCOMDOMSUP	DOMOBARSUPER
3	**1319036**	0-2	20A 690V	VIBIEMME ELETCOM	DOMOBARSUPER - DOSAPLUS - KOMETA - MERCURY - MINIMAX

COMMUTATORI VICTORIA ARDUINO
SELECTOR SWITCHES ARDUINO
UMSCHALTER VICTORIA ARDUINO
CONMUTADORES VICTORIA ARDUINO

1

2

3

Photo	LF Code	Positions number	Contact capacity	Suitable for	For machine model
1	**1319045**	0-1	32A 600V	VICTORIA ARDUINO 04200022	ATHENA LEVA
2	**1057028**	0-3	40A 660V	VICTORIA ARDUINO 40402001	ATHENA LEVA - VENUSBAR
3	**1057029**	0-1	20A 690V	VICTORIA ARDUINO 04200015	ATHENA LEVA - VENUSCENTURY

COMMUTATORI VISACREM
SELECTOR SWITCHES VISACREM
UMSCHALTER VISACREM
CONMUTADORES VISACREM

1

Photo	LF Code	Positions number	Contact capacity	Suitable for	For machine model
1	**1319031**	0-2	16A 250V	VISACREM 07847908	BRAVA - NERA - V6

COMMUTATORI WEGA
SELECTOR SWITCHES WEGA
UMSCHALTER WEGA
CONMUTADORES WEGA

1

2

3

Photo	LF Code	Positions number	Contact capacity	Suitable for	For machine model
1	**1319001**	0-1	20A 690V	WEGA W10734 - WY18201 - WY18211	ATLAS - NOVA - ORION
2	**1057542**	0-2	25A 690V	WEGA WY18104	COLOSSEUM - ESPRESSA - EURO2000 - ORION - POLARIS - VENUS
3	**1057543**	0-2	32A 690V	WEGA WY18105	COLOSSEUM - ESPRESSA - EURO2000 - ORION - START - SYNTESI

LF Group

The widest range of
spare parts and accessories

Cooking equipment
19,382 items
- Cooking equipment
- Ovens
- Pizza ovens
- Microwave ovens
- Food processing equipment

Washing and laundry equipment
11,097 items
- Warewashing equipment
- Laundry machines
- Ironing equipment
- Commercial faucets

Coffee and vending equipment
10,189 items
- Espresso machines
- Superautomatic machines
- Filter coffee machines
- Coffee grinders
- Vending equipment
- Barista tools
- Bar equipment

Refrigeration equipment
7,014 items
- Commercial refrigeration
- Blast chillers
- Ice makers
- Dispensing equipment

Home appliances
14,503 items
- Cooking
- Washing
- Refrigeration
- Coffee machines
- Small home appliances

CONTATORI VOLUMETRICI DELONGHI
VOLUMETRIC CONTACTORS DELONGHI
VOLUMENZÄHLER DELONGHI
CONTADORES VOLUMÉTRICOS DELONGHI

1

2

3

4

Photo	LF Code	Model	Suitable for	For machine model
1	**1455063**	974-9541-A NSF / ø 1.2 mm	DELONGHI 5213214671	ECAM23.210.W - ECAM26.455.C - ESAM5400 - ESAM5400EX
2	**D548003**	932-9521-A NSF / ø 1.2 mm	DELONGHI ES0067795	CITIZ - CITIZ & MILK - ESSENZA - GRAN MAESTRIA - MAESTRIA
3	**1455073**	974-9541-A180 NSF / ø 1.2 mm	DELONGHI 5213218571	ETAM36.365.M - ETAM29.510.B - ETAM29.620.SB - ETAM36.364.M
4	**1455072**	V2	DELONGHI ES0093700	PIXIE

CONTATORI VOLUMETRICI DIGMESA
VOLUMETRIC FLOWMETERS DIGMESA
VOLUMETRISCHE ZÄHLER DIGMESA
CONTADORES VOLUMÉTRICOS DIGMESA

1

2

3

4

5

6

Photo	LF Code	Model	Suitable for	For machine model
1	**5060440**	932-9521-B90 NSF / ø 1.2 mm	GAGGIA 12000781	ACCADEMIA - PLATINUM - UNICA
1	**5060440**	932-9521-B90 NSF / ø 1.2 mm	SAECO 12000781	ESPRESSO ITALIANO - LV PREMIUM - ODEA GO - TALEA RING PLUS - XELSIS
2	**D548003**	932-9521-A NSF / ø 1.2 mm	DELONGHI ES0067795	CITIZ - CITIZ & MILK - ESSENZA - GRAN MAESTRIA - MAESTRIA
2	**1455004**	974-9521-B NSF / ø 1.2 mm	GAGGIA NV99.099	BRERA
2	**1455004**	974-9521-B NSF / ø 1.2 mm	SAECO NV99.099	EXPRELIA - INTELIA - MOLTIO - ODEA GIRO - ODEAGO - ROYAL NEW
2	**1455063**	974-9541-A NSF / ø 1.2 mm	DELONGHI 5213214671	ECAM23.210.W - ECAM26.455.C - ESAM5400 - ESAM5400EX
2	**1455007**	974-9502-B NSF / ø 1.8 mm	SGL 502000	ROTARYLUXCAPS
3	**1455073**	974-9541-A180 NSF / ø 1,2 mm	DELONGHI 5213218571	ETAM36.365.M - ETAM29.510.B - ETAM29.620.SB - ETAM36.364.M
4	**1455061**	93A-0612FV08 / ø 1/4"FF / ø 1.2 mm	BIANCHI 24021916	LUCIA
5	**5053707**	93B-0610/F04 / ø 1/4"FF / ø 1.0 mm	CASADIO 534392700	DIECI - DODICI - QUINDICI - UNDICI - VENTI
5	**5053707**	93B-0610/F04 / ø 1/4"FF / ø 1.0 mm	CIMBALI 534-391-800	M100 - M22 - M24 - M27 - M28 - M29 - M30 - M31 - M32 - M39 - M39GT
5	**5053707**	93B-0610/F04 / ø 1/4"FF / ø 1.0 mm	FAEMA 534392700	E71 - E98 PRESIDENT - EMBLEMA - EMBLEMA RESTYLING - ENOVA - TEOREMA
6	**5053708**	93B-1610/F04 / ø 1/4"FF / ø 1.0 mm	FAEMA 2251131855	COMPACT - DUE - E61 JUBILE - E91 - E92 - E97 - E98 - EXPRESS - SMART

CONTATORI VOLUMETRICI GAGGIA/SAECO
VOLUMETRIC FLOWMETERS SAECO
VOLUMETRISCHE ZÄHLER GAGGIA/SAECO
CONTADORES VOLUMÉTRICOS GAGGIA/SAECO

1

2

3

4

5

6

Photo	LF Code	Suitable for	For machine model
1	**1411003**	GAGGIA 9160.039	TITANIUM
1	**1411003**	SAECO 9160.039	CAFENOVA - EASY - INCANTO - MAGICROMA - ROYAL PROFESSIONAL - TREVI
2	**1411002**	SAECO 289433200	CAFECREMA - CAFEGRANDE - TREVI - VIENNA - VIENNADELUXE
3	**1455008**	SAECO 289430500	SUPERAUTOMATICA
4	**1455007**	SAECO NV99.067	ODEA - TALEA
4	**1455004**	GAGGIA NV99.099	BRERA
4	**1455004**	SAECO NV99.099	EXPRELIA - INTELIA - MOLTIO - ODEAGO - ROYAL NEW - TALEA - XSMALL
5	**5060440**	GAGGIA 12000781	ACCADEMIA - PLATINUM - UNICA
5	**5060440**	SAECO 12000781	ESPRESSO ITALIANO - DEA GO - TALEA RING PLUS - XELSIS
6	**5024273**	GAGGIA 286473300	SYNCRONY LOGIG - TITANIUM
6	**5024273**	SAECO 286473300	CAFENOVA - EASY - INCANTO - MAGICROMA - ROYAL PROFESSIONAL - TREVI

CONTATORI VOLUMETRICI GICAR
VOLUMETRIC FLOWMETERS GICAR
VOLUMETRISCHE ZÄHLER GICAR
CONTADORES VOLUMÉTRICOS GICAR

1

2

3

4

5

Photo	LF Code	Model	Suitable for	For machine model
1	**1455029**	9.0.92.32G / ø 1/4"FF / ø 1.15 mm	FAEMA 2251131855	COMPACT - DUE - EXPRESS
2	**1455030**	9.0.92.27G / ø 1/4"FF / ø 1.15 mm	FAEMA 2251131855	COMPACT - DUE - EXPRESS
3	**1455058**	9.0.91.00G / ø 1/4"FF / ø 1.0 mm	CASADIO 534393100	DIECIA - DIECIS - DODICIA - DODICIS - VENTI
3	**1455058**	9.0.91.00G / ø 1/4"FF / ø 1.0 mm	CIMBALI 534-393-100	M22 - M24 - M29 - M32 - M39 - M39GT
3	**1455058**	9.0.91.00G / ø 1/4"FF / ø 1.0 mm	FAEMA 534393100	ENOVA - E98 PRESIDENT
4	**1455062**	9.0.99.06G	SPINEL SR.000.023.000	DUELUX - DUETTOLUX - ESSE - LOLAELITE - LOLITA
4	**1455062**	9.0.99.06G	VIBIEMME ELETCONTVODOS	DOMOBARSUPER
5	**5032820**	9.0.99.28G	NUOVA SIMONELLI 04900660	MUSICA - MUSICAS

CONTATORI VOLUMETRICI GICAR
VOLUMETRIC FLOWMETERS GICAR
VOLUMETRISCHE ZÄHLER GICAR
CONTADORES VOLUMÉTRICOS GICAR

1 - 1/4

2 - 1/8

3 - 1/4

4 - 1/4

Photo	LF Code	Model	Suitable for	For machine model
1	**1455067**	9.0.55.02G / ø 1/4"FF / ø 1.15 mm	ASTORIA/CMA 18126	ARGENTA - BRAVA - DIVINA - DORA - GLORIA - GLORIA R12
1	**1455067**	9.0.55.02G / ø 1/4"FF / ø 1.15 mm	BEZZERA 7431001	B2000 - B2006 - B2009 COMPACT - B2013 - B3000 - B4000
1	**1455067**	9.0.55.02G / ø 1/4"FF / ø 1.15 mm	BFC 5032012	CLASSICA - DELUX - GALILEO - GRANDOGE - IMOLA - JUNIOR
1	**1455067**	9.0.55.02G / ø 1/4"FF / ø 1.15 mm	BRUGNETTI-AURORA 95.01205	---
1	**1455005**	9.0.78.02G / ø 1/4"FF / ø 1.15 mm	CONTI 403466V	SK2
1	**1455067**	9.0.78.02G / ø 1/4"FF / ø 1.15 mm	ELEKTRA 02429035	CLASSIC - KAPPA - MODERN - SIXTIES
1	**1455067**	9.0.55.02G / ø 1/4"FF / ø 1.15 mm	EXPOBAR 60100045	ELEN - EXPRESSO - G10 - MARKUS - MARKUS SILVER
1	**1455067**	9.0.55.02G / ø 1/4"FF / ø 1.15 mm	FIORENZATO CS A1500026	BRICOLETTA - DUCALE - FENICE - LIDO - VENEZIA
1	**1455067**	9.0.55.02G / ø 1/4"FF / ø 1.15 mm	FUTURA 400028	F100
1	**1455067**	9.0.55.02G / ø 1/4"FF / ø 1.15 mm	FUTURMAT 08307500	ARIETE - F3 - RIMINI
1	**1455060**	9.0.93.02G / ø 1/4"FF / ø 1.15 mm	GAGGIA 11013052	DECO - GD - GE - XD - XE
1	**1455067**	9.0.55.02G / ø 1/4"FF / ø 1.15 mm	GRIMAC 1160900001-GR102	MIA - NEW CIALDA VAPOR - SELENITE DOUBLE - TWENTY
1	**1455067**	9.0.55.02G / ø 1/4"FF / ø 1.15 mm	MCE 18126	START
1	**1455067**	9.0.55.02G / ø 1/4"FF / ø 1.15 mm	NUOVA SIMONELLI 04900027	APPIA - APPIA COMPACT - AURELIA - AURELIAII - MACDIGIT
1	**1455067**	9.0.55.02G / ø 1/4"FF / ø 1.15 mm	ORCHESTRALE D18126	ETNICA - PHONICA
1	**1455067**	9.0.55.02G / ø 1/4"FF / ø 1.15 mm	RENEKA 9008954	LC - LIFE - PRESTIGE - VIVA
1	**1455067**	9.0.55.02G / ø 1/4"FF / ø 1.15 mm	ROYAL 5032012	DIADEMA - SYNCHRO
1	**1455060**	9.0.93.02G / ø 1/4"FF / ø 1.15 mm	SAECO 11013052	AROMA
1	**1455067**	9.0.55.02G / ø 1/4"FF / ø 1.15 mm	SAN MARCO 108192	NEW 105 - 100 - 105 - 85 - 95
1	**1455067**	9.0.55.02G / ø 1/4"FF / ø 1.15 mm	SANREMO 10112131A	MILANO LX
1	**1455067**	9.0.55.02G / ø 1/4"FF / ø 1.15 mm	SCALA C-0215	BUTTERFLY - CARMEN - EROICA
1	**1455067**	9.0.55.02G / ø 1/4"FF / ø 1.15 mm	VIBIEMME ELETCONTVOLOT	CHIMAERA - CUBO - DOMOBARSUPER - DOSAPLUS - EVOLUTION
1	**1455067**	9.0.55.02G / ø 1/4"FF / ø 1.15 mm	VICTORIA ARDUINO 04900027	ADONIS - VENUS CENTURY
1	**1455067**	9.0.55.02G / ø 1/4"FF / ø 1.15 mm	WEGA WY18126	ATLAS - ATLAS 10 - COLOSSEUM - COMBI NOVA - CONCEPT
2	**1455068**	9.0.55.50G / ø 1/8"FF / ø 1.15 mm	BRASILIA 16054.2.00.08	ROMA
2	**1455068**	9.0.55.50G / ø 1/8"FF / ø 1.15 mm	CIMBALI 534-391-020	M20 - M21 JUNIOR - M22 - M27 - M27 START - M28 - M29
2	**1455068**	9.0.55.50G / ø 1/8"FF / ø 1.15 mm	FAEMA 534391020	E98 COMPACT
2	**1455068**	9.0.55.50G / ø 1/8"FF / ø 1.15 mm	FIAMMA RST 5.0.000.1012	ATLANTIC - MARINA - PRESTIGE
2	**1455068**	9.0.55.50G / ø 1/8"FF / ø 1.15 mm	PAVONI 438020	---
2	**1455068**	9.0.55.50G / ø 1/8"FF / ø 1.15 mm	SANREMO 10112290	AMALFI - CAPRI - PISA - TORINO - VERONA - ZOE
3	**1455026**	9.0.54.05G / ø 1/4"FF / ø 1.15 mm	FRACINO FC92	BAMBINO
3	**1455026**	9.0.54.05G / ø 1/4"FF / ø 1.15 mm	MARZOCCO LAD070	FB70 - FB80 - GB5 - GS3 - LINEA - MISTRAL
3	**1455026**	9.0.54.05G / ø 1/4"FF / ø 1.15 mm	PROMAC 34070050	CLUB - COMPACT - GREEN
3	**1455026**	9.0.54.05G / ø 1/4"FF / ø 1.15 mm	RANCILIO 34070050	CLASSE10 - CLASSE9 - EPOCA
4	**1455001**	9.0.69.03G / ø 1/4"FF / ø 1.15 mm	SPAZIALE 02498	NEW - RAPID - S1 - S2 - S3 - S40 - S5 - S8

CONTATORI VOLUMETRICI GICAR ACCESSORI
VOLUMETRIC FLOWMETERS GICAR ACCESSORIES
VOLUMETRISCHER ZÄHLER GICAR ZUBEHÖR
CONTADORES VOLUMÉTRICOS GICAR ACCESORIOS

1

2

3

4

5

6

Photo	LF Code	Model	Notes
1	**3455333**	9.0.16.50G	LED
2	**5052706**	9.0.15.51G	NO LED
3	**5037299**	9.0.15.53G	---
4	**1455032**	6.9.23.05G	---
5	**1186631**	---	---
6	**1455033**	8.6.17.14	---

ANFIM

1080082

CONTENITORE CAFFÈ

KAFFEEBOHNENBEHÄLTER

ANFIM 40 ANFIM 45

COFFEE HOPPER

CONTENEDOR CAFÉ

ANFIM 50040

1080515

CONTENITORE CAFFÈ

KAFFEEBOHNENBEHÄLTER

ANFIM 217 ANFIM 217-C

COFFEE HOPPER

CONTENEDOR CAFÉ

1080512

CONTENITORE CAFFÈ 1 kg

KAFFEEBOHNENBEHÄLTER 1 Kg

ANFIM 115 ANFIM 219

COFFEE HOPPER 1 kg

CONTENEDOR CAFÉ 1 kg

ANFIM 219-C ANFIM 500219

1080911

CONTENITORE CAFFÈ COMPLETO

KAFFEEBOHNENBEHÄLTER KOMPLETT

ANFIM 445 ANFIM 450

COFFEE HOPPER COMPLETE

CONTENEDOR CAFÉ COMPLETO

ANFIM 500450

ASTORIA CMA

1080249

CAMPANA ROSSI COMPLETA

KAFFEEBOHNENBEHÄLTER ROSSI KOMPLETT

ASTORIA CMA 28352002

HOPPER ROSSI COMPLETE

CONTENEDOR CAFÉ ROSSI COMPLETO

1080027

CONTENITORE CAFFÈ

KAFFEEBOHNENBEHÄLTER

ASTORIA CMA 28042001

COFFEE HOPPER

CONTENEDOR CAFÉ

1080915

CONTENITORE CAFFÈ
per macinadosatore MAJOR prodotto fino al 2005
dal 2005 - vedi LF 1080916

KAFFEEBOHNENBEHÄLTER
für Kaffeemühle MAJOR bis 2005 hergestellt
ab 2005 - LF 1080916 sehen

ASTORIA CMA 28351

COFFEE HOPPER
for coffee grinder MAJOR manufactured up to 2005
since 2005 - see LF 1080916

CONTENEDOR CAFÉ
para molino dosificador MAJOR hasta 2005
desde 2005 - ver LF 1080916

1080506

CONTENITORE CAFFÈ COMPLETO

COFFEE HOPPER COMPLETE

KAFFEEBOHNENBEHÄLTER KOMPLETT

CONTENEDOR CAFÉ COMPLETO

ASTORIA CMA 28357001

1080916

CONTENITORE CAFFÈ COMPLETO

COFFEE HOPPER COMPLETE

KAFFEEBOHNENBEHÄLTER KOMPLETT

CONTENEDOR CAFÉ COMPLETO

ASTORIA CMA 28351002

1080932

CONTENITORE CAFFÈ COMPLETO 2 kg

COFFEE HOPPER COMPLETE 2 kg

KAFFEEBOHNENBEHÄLTER KOMPLETT 2 kg

CONTENEDOR CAFÉ COMPLETO 2 kg

ASTORIA CMA 28500000

1080095

CONTENITORE CAFFÈ

COFFEE HOPPER

KAFFEEBOHNENBEHÄLTER

CONTENEDOR CAFÉ

ASTORIA CMA 28357

1080086

CONTENITORE CAFFÈ COMPLETO

COFFEE HOPPER COMPLETE

KAFFEEBOHNENBEHÄLTER KOMPLETT

CONTENEDOR CAFÉ COMPLETO

ASTORIA CMA 28530003 ASTORIA CMA 28530004

AZKOYEN

1080092

CONTENITORE CAFFÈ

COFFEE HOPPER

KAFFEEBOHNENBEHÄLTER

CONTENEDOR CAFÉ

AZKOYEN

BEZZERA

1080042

CONTENITORE CAFFÈ

COFFEE HOPPER

KAFFEEBOHNENBEHÄLTER
Füllmenge 1 kg

CONTENEDOR CAFÉ

BEZZERA 0M0602007 BEZZERA 0M0602015

1080075

CONTENITORE CAFFÈ

COFFEE HOPPER

KAFFEEBEHÄLTER

CONTENEDOR CAFÉ

BEZZERA 0BEB02 BEZZERA 0BG02

1080938

CONTENITORE CAFFÈ 250 gr

COFFEE HOPPER 250 gr

KAFFEEBOHNENBEHÄLTER 250 gr

CONTENEDOR CAFÉ 250 gr

BEZZERA 0BDF2 BEZZERA 0BDF2

genuine

BRASILIA

1080249

CAMPANA ROSSI COMPLETA

HOPPER ROSSI COMPLETE

KAFFEEBOHNENBEHÄLTER ROSSI KOMPLETT

CONTENEDOR CAFÉ ROSSI COMPLETO

BRASILIA 01161.4.00.09 BRASILIA 12043.4.00.09 BRASILIA 12043.8.00.09 BRASILIA 19937.0.00.02

CARIMALI

1080075

CONTENITORE CAFFÈ

COFFEE HOPPER

KAFFEEBEHÄLTER

CONTENEDOR CAFÉ

CARIMALI 95.00800 CARIMALI 95.01494

genuine

1080938

CONTENITORE CAFFÈ 250 gr

COFFEE HOPPER 250 gr

KAFFEEBOHNENBEHÄLTER 250 gr

CONTENEDOR CAFÉ 250 gr

CARIMALI 95.01477

genuine

CASADIO

1080207

CONTENITORE CAFFÈ

KAFFEEBOHNENBEHÄLTER

CASADIO 965089010

COFFEE HOPPER

CONTENEDOR CAFÉ

1080054

CONTENITORE CAFFÈ COMPLETO

KAFFEEBOHNENBEHÄLTER KOMPLETT

CASADIO 40098380000 CASADIO 45000790001

COFFEE HOPPER COMPLETE

CONTENEDOR CAFÉ COMPLETO

1080071

CONTENITORE CAFFÈ

KAFFEEBOHNENBEHÄLTER

CASADIO 45001290001

COFFEE HOPPER

CONTENEDOR CAFÉ

CEADO

1080252

CONTENITORE CAFFÈ

KAFFEEBOHNENBEHÄLTER

CEADO 90177

COFFEE HOPPER

CONTENEDOR CAFÉ

1080253

CONTENITORE CAFFÈ

KAFFEEBOHNENBEHÄLTER

CEADO 90263

COFFEE HOPPER

CONTENEDOR CAFÉ

1080254

CONTENITORE CAFFÈ

KAFFEEBOHNENBEHÄLTER

CEADO 90166

COFFEE HOPPER

CONTENEDOR CAFÉ

CIMBALI

1080011

CONTENITORE CAFFÈ

COFFEE HOPPER

KAFFEEBOHNENBEHÄLTER

CONTENEDOR CAFÉ

CIMBALI 3504-135-294 CIMBALI 965-276-000

genuine

1080012

CONTENITORE CAFFÈ

COFFEE HOPPER

KAFFEEBOHNENBEHÄLTER

CONTENEDOR CAFÉ

CIMBALI 4504-133-563 CIMBALI 4504-135-040 CIMBALI 465-818-000 CIMBALI 800-135-040

genuine

1080030

CONTENITORE CAFFÈ

COFFEE HOPPER

KAFFEEBOHNENBEHÄLTER

CONTENEDOR CAFÉ

CIMBALI 3526-133-557

genuine

1080042

CONTENITORE CAFFÈ

COFFEE HOPPER

KAFFEEBOHNENBEHÄLTER

CONTENEDOR CAFÉ

Füllmenge 1 kg

CIMBALI 803-190-035 CIMBALI 965-300-000

genuine

1080043

CONTENITORE CAFFÈ

KAFFEEBOHNENBEHÄLTER

CIMBALI 465-505-000

COFFEE HOPPER

CONTENEDOR CAFÉ

1080044

CONTENITORE CAFFÈ

KAFFEEBOHNENBEHÄLTER

CIMBALI 465-990-000 CIMBALI 465-990-010

COFFEE HOPPER

CONTENEDOR CAFÉ

1080207

CONTENITORE CAFFÈ

KAFFEEBOHNENBEHÄLTER

CIMBALI 965-089-010

COFFEE HOPPER

CONTENEDOR CAFÉ

COMPAK

1080506

CONTENITORE CAFFÈ COMPLETO

KAFFEEBOHNENBEHÄLTER KOMPLETT

COMPAK K..286 COMPAK K01358

COFFEE HOPPER COMPLETE

CONTENEDOR CAFÉ COMPLETO

1080094

CONTENITORE CAFFÈ

KAFFEEBOHNENBEHÄLTER

COMPAK K.2028

COFFEE HOPPER

CONTENEDOR CAFÉ

1080095

CONTENITORE CAFFÈ

KAFFEEBOHNENBEHÄLTER

COMPAK K....3

COFFEE HOPPER

CONTENEDOR CAFÉ

CUNILL

1080907

CONTENITORE CAFFÈ 1 kg

KAFFEEBOHNENBEHÄLTER 1 Kg

CUNILL

COFFEE HOPPER 1 kg

CONTENEDOR CAFÉ 1 kg

1080906

CONTENITORE CAFFÈ COMPLETO

COFFEE HOPPER COMPLETE

KAFFEEBOHNENBEHÄLTER KOMPLETT

CONTENEDOR CAFÉ COMPLETO

CUNILL

1080931

CONTENITORE CAFFÈ COMPLETO 1 kg

COFFEE HOPPER COMPLETE 1 kg

KAFFEEBOHNENBEHÄLTER KOMPLETT 1 kg

CONTENEDOR CAFÉ COMPLETO 1 kg

CUNILL 001MOL CUNILL MC0001

1080933

CONTENITORE CAFFÈ COMPLETO 1 kg

COFFEE HOPPER COMPLETE 1 kg

KAFFEEBOHNENBEHÄLTER KOMPLETT 1 kg

CONTENEDOR CAFÉ COMPLETO 1 kg

CUNILL 100MOL CUNILL MC0100

1080932

CONTENITORE CAFFÈ COMPLETO 2 kg

COFFEE HOPPER COMPLETE 2 kg

KAFFEEBOHNENBEHÄLTER KOMPLETT 2 kg

CONTENEDOR CAFÉ COMPLETO 2 kg

CUNILL 002MOL CUNILL MC0002

1080934

CONTENITORE CAFFÈ COMPLETO 500 gr

COFFEE HOPPER COMPLETE 500 gr

KAFFEEBOHNENBEHÄLTER KOMPLETT 500 gr

CONTENEDOR CAFÉ COMPLETO 500 gr

CUNILL 118MOL CUNILL MC0118

1080501

CONTENITORE CAFFÈ STANDARD 1,5 kg

STANDARD COFFEE HOPPER 1.5 Kg

KAFFEEBOHNENBEHÄLTER STANDARD 1,5 Kg

CONTENEDOR CAFÉ ESTÁNDAR 1,5 kg

CUNILL

1080087

CONTENITORE CAFFÈ COMPLETO

COFFEE HOPPER COMPLETE

KAFFEEBOHNENBEHÄLTER KOMPLETT

CONTENEDOR CAFÉ COMPLETO

CUNILL 324MOL CUNILL MC0324

1080088

CONTENITORE CAFFÈ COMPLETO

COFFEE HOPPER COMPLETE

KAFFEEBOHNENBEHÄLTER KOMPLETT

CONTENEDOR CAFÉ COMPLETO

CUNILL 325MOL CUNILL MC0325

1080089

CONTENITORE CAFFÈ COMPLETO

COFFEE HOPPER COMPLETE

KAFFEEBOHNENBEHÄLTER KOMPLETT

CONTENEDOR CAFÉ COMPLETO

CUNILL 326MOL CUNILL MC0326

1080090

CONTENITORE CAFFÈ COMPLETO

COFFEE HOPPER COMPLETE

KAFFEEBOHNENBEHÄLTER KOMPLETT

CONTENEDOR CAFÉ COMPLETO

CUNILL 155/157MOL

DRM

1080042

CONTENITORE CAFFÈ

COFFEE HOPPER

KAFFEEBOHNENBEHÄLTER
Füllmenge 1 kg

CONTENEDOR CAFÉ

DRM MX-T-003

ELEKTRA

1252709

CONTENITORE CAFFÈ

COFFEE HOPPER

KAFFEEBOHNENBEHÄLTER

CONTENEDOR CAFÉ

ELEKTRA C0007M113

EUREKA

1080056

CONTENITORE CAFFÈ

COFFEE HOPPER

KAFFEEBOHNENBEHÄLTER

CONTENEDOR CAFÉ

EUREKA 5104.0000 EUREKA 5104.0010

EUREKA 5204.0000

5082386

CONTENITORE CAFFÈ

COFFEE HOPPER

KAFFEEBOHNENBEHÄLTER

CONTENEDOR CAFÉ

EUREKA 5210.0000 EUREKA 5210.0001

1080054

CONTENITORE CAFFÈ COMPLETO

KAFFEEBOHNENBEHÄLTER KOMPLETT

EUREKA 5101.0000 EUREKA 5101.0011

COFFEE HOPPER COMPLETE

CONTENEDOR CAFÉ COMPLETO

EUREKA 5103.0000 EUREKA 5201.0000

1080055

CONTENITORE CAFFÈ COMPLETO

KAFFEEBOHNENBEHÄLTER KOMPLETT

EUREKA 5107.0000 EUREKA 5107.0010

COFFEE HOPPER COMPLETE

CONTENEDOR CAFÉ COMPLETO

EUREKA 5207.0000

1080052

CONTENITORE CAFFÈ IN VETRO

KAFFEEBOHNENBEHÄLTER AUS GLAS

EUREKA 5108.0000 EUREKA 5108.0010

GLASS COFFEE HOPPER

CONTENEDOR CAFÉ DE CRISTAL

EUREKA 5208.0000

EXPOBAR

1080932

CONTENITORE CAFFÈ COMPLETO 2 kg

KAFFEEBOHNENBEHÄLTER KOMPLETT 2 kg

COFFEE HOPPER COMPLETE 2 kg

CONTENEDOR CAFÉ COMPLETO 2 kg

EXPOBAR C0000020

genuine

FAEMA

1080001

CONTENITORE CAFFÈ

KAFFEEBOHNENBEHÄLTER

COFFEE HOPPER

CONTENEDOR CAFÉ

FAEMA 3529133557

genuine

1080002

CONTENITORE CAFFÈ

KAFFEEBOHNENBEHÄLTER

COFFEE HOPPER

CONTENEDOR CAFÉ

FAEMA 3504135295

genuine

1080012

CONTENITORE CAFFÈ

KAFFEEBOHNENBEHÄLTER

FAEMA 4504133563 FAEMA 4504135040

COFFEE HOPPER

CONTENEDOR CAFÉ

FAEMA 465818000

1080030

CONTENITORE CAFFÈ

KAFFEEBOHNENBEHÄLTER

FAEMA 3526133557

COFFEE HOPPER

CONTENEDOR CAFÉ

1080207

CONTENITORE CAFFÈ

KAFFEEBOHNENBEHÄLTER

FAEMA 965089010

COFFEE HOPPER

CONTENEDOR CAFÉ

FIAMMA RST

1080249

CAMPANA ROSSI COMPLETA

HOPPER ROSSI COMPLETE

KAFFEEBOHNENBEHÄLTER ROSSI KOMPLETT

CONTENEDOR CAFÉ ROSSI COMPLETO

FIAMMA RST 5.0.052.2742

FIORENZATO C.S.

1080064

CONTENITORE CAFFÈ

COFFEE HOPPER

KAFFEEBOHNENBEHÄLTER

CONTENEDOR CAFÉ

FIORENZATO C.S. A3200027

1080065

CONTENITORE CAFFÈ COMPLETO

COFFEE HOPPER COMPLETE

KAFFEEBOHNENBEHÄLTER KOMPLETT

CONTENEDOR CAFÉ COMPLETO

FIORENZATO C.S. A3200066

FIORENZATO M.C.

1080034

CONTENITORE CAFFÈ COMPLETO

COFFEE HOPPER COMPLETE

KAFFEEBOHNENBEHÄLTER KOMPLETT
Aufnahme Ø 68mm

CONTENEDOR CAFÉ COMPLETO

FIORENZATO M.C. 001.001.001 FIORENZATO M.C. 001.001.005 FIORENZATO M.C. 200000001 FIORENZATO M.C. 200000004

FUTURMAT-ARIETE

1080931

CONTENITORE CAFFÈ COMPLETO 1 kg

COFFEE HOPPER COMPLETE 1 kg

KAFFEEBOHNENBEHÄLTER KOMPLETT 1 kg

CONTENEDOR CAFÉ COMPLETO 1 kg

FUTURMAT-ARIETE 26000001

1080933

CONTENITORE CAFFÈ COMPLETO 1 kg

COFFEE HOPPER COMPLETE 1 kg

KAFFEEBOHNENBEHÄLTER KOMPLETT 1 kg

CONTENEDOR CAFÉ COMPLETO 1 kg

FUTURMAT-ARIETE 26000100

1080932

CONTENITORE CAFFÈ COMPLETO 2 kg

COFFEE HOPPER COMPLETE 2 kg

KAFFEEBOHNENBEHÄLTER KOMPLETT 2 kg

CONTENEDOR CAFÉ COMPLETO 2 kg

FUTURMAT-ARIETE 26000002

1080501

CONTENITORE CAFFÈ STANDARD 1,5 kg

STANDARD COFFEE HOPPER 1.5 Kg

KAFFEEBOHNENBEHÄLTER STANDARD 1,5 Kg

CONTENEDOR CAFÉ ESTÁNDAR 1,5 kg

FUTURMAT-ARIETE 07648306

GAGGIA

1252709

CONTENITORE CAFFÈ

COFFEE HOPPER

KAFFEEBOHNENBEHÄLTER

CONTENEDOR CAFÉ

GAGGIA 4931C0007M113

1252716

CONTENITORE CAFFÈ

COFFEE HOPPER

KAFFEEBOHNENBEHÄLTER

CONTENEDOR CAFÉ

GAGGIA 4931C0007M157

MACAP

1252709

CONTENITORE CAFFÈ

KAFFEEBOHNENBEHÄLTER

MACAP C0007M113

COFFEE HOPPER

CONTENEDOR CAFÉ

1252716

CONTENITORE CAFFÈ

KAFFEEBOHNENBEHÄLTER

MACAP C0007M157

COFFEE HOPPER

CONTENEDOR CAFÉ

1252717

CONTENITORE CAFFÈ

KAFFEEBOHNENBEHÄLTER

MACAP C0007M161

COFFEE HOPPER

CONTENEDOR CAFÉ

MAHLKÖNIG

1080086

CONTENITORE CAFFÈ COMPLETO

COFFEE HOPPER COMPLETE

KAFFEEBOHNENBEHÄLTER KOMPLETT

CONTENEDOR CAFÉ COMPLETO

MAHLKÖNIG

MARCFI-ANCAS

1080506

CONTENITORE CAFFÈ COMPLETO

COFFEE HOPPER COMPLETE

KAFFEEBOHNENBEHÄLTER KOMPLETT

CONTENEDOR CAFÉ COMPLETO

MARCFI-ANCAS K-286

MAZZER

1080027

CONTENITORE CAFFÈ

COFFEE HOPPER

KAFFEEBOHNENBEHÄLTER

CONTENEDOR CAFÉ

MAZZER SKOSCAE03

MAZZER SKOSCAE03/QQQ

1080080

CONTENITORE CAFFÈ

KAFFEEBOHNENBEHÄLTER

MAZZER SMC0CAE03 MAZZER SMC0CAE03/QQQ

COFFEE HOPPER

CONTENEDOR CAFÉ

1080915

CONTENITORE CAFFÈ
per macinadosatore MAJOR prodotto fino al 2005
dal 2005 - vedi LF 1080916

KAFFEEBOHNENBEHÄLTER
für Kaffeemühle MAJOR bis 2005 hergestellt
ab 2005 - LF 1080916 sehen

MAZZER S000CAE02 MAZZER S000CAE02-A
MAZZER S00SCAE08/QQQ

COFFEE HOPPER
for coffee grinder MAJOR manufactured up to 2005
since 2005 - see LF 1080916

CONTENEDOR CAFÉ
para molino dosificador MAJOR hasta 2005
desde 2005 - ver LF 1080916

MAZZER S000CAE08 MAZZER S00SCAE08

1080079

CONTENITORE CAFFÈ COMPLETO
per MODELLI VECCHI

KAFFEEBOHNENBEHÄLTER KOMPLETT
für ALTE MODELLE

MAZZER S00SCAE01

COFFEE HOPPER COMPLETE
for OLD MODELS

CONTENEDOR CAFÉ COMPLETO
para VIEJOS MODELOS

1080916

CONTENITORE CAFFÈ COMPLETO

KAFFEEBOHNENBEHÄLTER KOMPLETT

MAZZER S000CAE03 MAZZER S00SCAE03
MAZZER S00SCAE07+ MAZZER S00SCAE07/QQQ

COFFEE HOPPER COMPLETE

CONTENEDOR CAFÉ COMPLETO

MAZZER S00SCAE03/QQQ MAZZER S00SCAE07

1252901

CONTENITORE CAFFÈ COMPLETO

COFFEE HOPPER COMPLETE

KAFFEEBEHÄLTER KOMPLETT

CONTENEDOR CAFÉ COMPLETO

MAZZER SMI0CAE01
MAZZER SMI0CAE03
MAZZER SMISCAE04
MAZZER SMISCAE03
MAZZER SMISCAE03/QQQ

1080076

CONTENITORE CAFFÈ COMPLETO 320 gr

COFFEE HOPPER COMPLETE 320 gr

KAFFEEBOHNENBEHÄLTER KOMPLETT 320gr

CONTENEDOR CAFÉ COMPLETO 320 gr

MAZZER SMI0CAE02
MAZZER SMISCAE02
MAZZER SMISCAE06/QQQ
MAZZER SMISCAEU2
MAZZER SMISCAE02-A
MAZZER SMISCAE06

NUOVA SIMONELLI

1080249

CAMPANA ROSSI COMPLETA

HOPPER ROSSI COMPLETE

KAFFEEBOHNENBEHÄLTER ROSSI KOMPLETT

CONTENEDOR CAFÉ ROSSI COMPLETO

NUOVA SIMONELLI 15010002

1080056

CONTENITORE CAFFÈ

COFFEE HOPPER

KAFFEEBOHNENBEHÄLTER

CONTENEDOR CAFÉ

NUOVA SIMONELLI 15800002

1080054

CONTENITORE CAFFÈ COMPLETO

COFFEE HOPPER COMPLETE

KAFFEEBOHNENBEHÄLTER KOMPLETT

CONTENEDOR CAFÉ COMPLETO

NUOVA SIMONELLI 01100002

NUOVA SIMONELLI 15000051

1080055

CONTENITORE CAFFÈ COMPLETO

COFFEE HOPPER COMPLETE

KAFFEEBOHNENBEHÄLTER KOMPLETT

CONTENEDOR CAFÉ COMPLETO

NUOVA SIMONELLI 15000056

OBEL

1080075

CONTENITORE CAFFÈ

COFFEE HOPPER

KAFFEEBEHÄLTER

CONTENEDOR CAFÉ

OBEL EB02

OBEL EB02+EB04

OBEL G02

1080938

CONTENITORE CAFFÈ 250 gr

COFFEE HOPPER 250 gr

KAFFEEBOHNENBEHÄLTER 250 gr

CONTENEDOR CAFÉ 250 gr

OBEL DF2

PAVONI

1080075

CONTENITORE CAFFÈ

KAFFEEBEHÄLTER

PAVONI OBEB02 PAVONI OBEBG02G

COFFEE HOPPER

CONTENEDOR CAFÉ

PAVONI OBEG02G

QUAMAR

1080926

CONTENITORE CAFFÈ 1,2Kg ø 175 mm

KAFFEEBEHÄLTER 1,2kg ø 175 mm

QUAMAR 160080

COFFEE CONTAINER 1.2Kg ø 175 mm

CONTENEDOR CAFÉ 1,2 kg ø 175 mm

1080921

CONTENITORE CAFFÈ 1,5Kg ø 200 mm

KAFFEEBEHÄLTER 1,5kg ø 200 mm

QUAMAR 160076

COFFEE HOPPER 1.5Kg ø 200 mm

CONTENEDOR CAFÉ 1,5 kg ø 200 mm

1080922

CONTENITORE CAFFÈ COMPLETO

KAFFEEBOHNENBEHÄLTER KOMPLETT

QUAMAR 340066 QUAMAR RMT480001

COFFEE HOPPER COMPLETE

CONTENEDOR CAFÉ COMPLETO

1080927

CONTENITORE CAFFÈ COMPLETO

KAFFEEBOHNENBEHÄLTER KOMPLETT

QUAMAR 340068 QUAMAR RMT800001

COFFEE HOPPER COMPLETE

CONTENEDOR CAFÉ COMPLETO

RANCILIO

1080901

CONTENITORE CAFFÈ COMPLETO
dimensioni 124x124xh180 mm

KAFFEEBOHNENBEHÄLTER KOMPLETT
Maße 124x124xh180 mm

RANCILIO 14030005

COFFEE HOPPER COMPLETE
dimensions 124x124xh180 mm

CONTENEDOR CAFÉ COMPLETO
medidas 124x124xh180 mm

1080902

CONTENITORE CAFFÈ COMPLETO
dimensioni 150x150xh220 mm

KAFFEEBOHNENBEHÄLTER KOMPLETT
Maße 150x150xh220 mm

RANCILIO 14030001

COFFEE HOPPER COMPLETE
dimensions 150x150xh220 mm

CONTENEDOR CAFÉ COMPLETO
medidas 150x150xh220 mm

1080903

CONTENITORE CAFFÈ COMPLETO
dimensioni 162x162h250 mm

KAFFEEBOHNENBEHÄLTER KOMPLETT
Maße 162x162h250 mm

RANCILIO 14030011

COFFEE HOPPER COMPLETE
dimensions 162x162xh250 mm

CONTENEDOR CAFÉ COMPLETO
medidas 162x162h250 mm

genuine

RENEKA

1080075

CONTENITORE CAFFÈ

KAFFEEBEHÄLTER

RENEKA 0005011

COFFEE HOPPER

CONTENEDOR CAFÉ

genuine

ROSSI

1080249

CAMPANA ROSSI COMPLETA

KAFFEEBOHNENBEHÄLTER ROSSI KOMPLETT

ROSSI 2737 ROSSI 2737.500.1

HOPPER ROSSI COMPLETE

CONTENEDOR CAFÉ ROSSI COMPLETO

SAN MARCO

1080004

CONTENITORE CAFFÈ

KAFFEEBOHNENBEHÄLTER

SAN MARCO 106050 SAN MARCO 106166

COFFEE HOPPER

CONTENEDOR CAFÉ

1080003

CONTENITORE CAFFÈ 4,6 l

KAFFEEBOHNENBEHÄLTER 4,6 l

SAN MARCO 106201 SAN MARCO 106201ML

COFFEE HOPPER 4.6 l

CONTENEDOR CAFÉ 4,6 l

1080005

CONTENITORE CAFFÈ 6 l
ø esterno superiore 220 mm
ø esterno inferiore 67 mm - altezza totale 231 mm

KAFFEEBOHNENBEHÄLTER 6 l
Aussen-ø oben 220 mm
Aussen-ø unten 67 mm - Gesamthöhe 231 mm

SAN MARCO 106202 SAN MARCO 106202ML

COFFEE HOPPER 6 l
top external ø 220 mm
lower external ø 67 mm - overall height 231 mm

CONTENEDOR CAFÉ 6 l
ø exterior superior 220 mm
ø exterior inferior 67 mm - altura total 231 mm

SANTOS

1080038

CONTENITORE CAFFÈ

COFFEE HOPPER

KAFFEEBOHNENBEHÄLTER

CONTENEDOR CAFÉ

SANTOS 06102

1080039

CONTENITORE CAFFÈ

COFFEE HOPPER

KAFFEEBOHNENBEHÄLTER

CONTENEDOR CAFÉ

SANTOS 60100

1080040

CONTENITORE CAFFÈ

COFFEE HOPPER

KAFFEEBOHNENBEHÄLTER

CONTENEDOR CAFÉ

SANTOS 55100

1080551

CONTENITORE CAFFÈ COMPLETO

COFFEE HOPPER COMPLETE

KAFFEEBOHNENBEHÄLTER KOMPLETT

CONTENEDOR CAFÉ COMPLETO

SANTOS 40100

SPAZIALE

1080082

CONTENITORE CAFFÈ

COFFEE HOPPER

KAFFEEBOHNENBEHÄLTER

CONTENEDOR CAFÉ

SPAZIALE 547

1252709

CONTENITORE CAFFÈ

COFFEE HOPPER

KAFFEEBOHNENBEHÄLTER

CONTENEDOR CAFÉ

SPAZIALE 5551

1252716

CONTENITORE CAFFÈ

COFFEE HOPPER

KAFFEEBOHNENBEHÄLTER

CONTENEDOR CAFÉ

SPAZIALE 8377

1080938

CONTENITORE CAFFÈ 250 gr

COFFEE HOPPER 250 gr

KAFFEEBOHNENBEHÄLTER 250 gr

CONTENEDOR CAFÉ 250 gr

SPAZIALE 5823

1080911

CONTENITORE CAFFÈ COMPLETO

KAFFEEBOHNENBEHÄLTER KOMPLETT

SPAZIALE 377

COFFEE HOPPER COMPLETE

CONTENEDOR CAFÉ COMPLETO

genuine

VIBIEMME

1080064

CONTENITORE CAFFÈ

KAFFEEBOHNENBEHÄLTER

VIBIEMME MACCAMVB

COFFEE HOPPER

CONTENEDOR CAFÉ

genuine

WEGA

1080506

CONTENITORE CAFFÈ COMPLETO

KAFFEEBOHNENBEHÄLTER KOMPLETT

WEGA WY28357001

COFFEE HOPPER COMPLETE

CONTENEDOR CAFÉ COMPLETO

genuine

1080094

CONTENITORE CAFFÈ

COFFEE HOPPER

KAFFEEBOHNENBEHÄLTER

CONTENEDOR CAFÉ

WEGA WY28357002

1080095

CONTENITORE CAFFÈ

COFFEE HOPPER

KAFFEEBOHNENBEHÄLTER

CONTENEDOR CAFÉ

WEGA WY28357

VARI • MISCELLANEOUS • VERSCHIEDENES • VARIOS

1002516

CONTENITORE CAFFÈ 500 gr

COFFEE HOPPER 500 gr

KAFFEEBOHNENBEHÄLTER 500 gr

CONTENEDOR CAFÉ 500 gr

CONTENITORI SOTTOVUOTO AIRSCAPE
VACUUM CONTAINERS AIRSCAPE
VAKUUMBEHÄLTER AIRSCAPE
CONTENEDORES AL VACÍO AIRSCAPE

Planetary Design

1 2 3 4 5

Photo	LF Code	Colour	Capacity (ml)	Dimensions (mm)
1	**1452001**	BLACK	850	ø 120x108
2	**1452002**	CHROME	850	ø 120x108
3	**1452014**	PEARL	850	ø 120x108
4	**1452007**	RED	850	ø 120x108
5	**1452005**	MOCHA	850	ø 120x108

Tutti i contenitori sono completi di valvola per il sottovuoto. Elimina l'aria con un semplice gesto. Mantiene piu' a lungo gli alimenti
All containers are equipped with vacuum valve. One simple movement to remove air. They preserve food longer
Alle Behälter haben eine Vakuum-Ventile. Die beseitigt die Luft mit einer einfachen Bewegung. Für eine längere Konservierung der Lebensmittel
Todos los contenedores están completos de valvúla al vacio. Elimina el aire con un movimiento muy fácil. Los alimentos se conservan a largo plazo

CONTENITORI SOTTOVUOTO AIRSCAPE
VACUUM CONTAINERS AIRSCAPE
VAKUUMBEHÄLTER AIRSCAPE
CONTENEDORES AL VACÍO AIRSCAPE

Planetary Design

1 2 3 4

Photo	LF Code	Colour	Capacity (ml)	Dimensions (mm)
1	**1452010**	BLACK	1800	ø 120x180
2	**1452011**	CHROME	1800	ø 120x180
3	**1452015**	PEARL	1800	ø 120x180
4	**1452013**	RED	1800	ø 120x180

Tutti i contenitori sono completi di valvola per il sottovuoto. Elimina l'aria con un semplice gesto. Mantiene piu' a lungo gli alimenti
All containers are equipped with vacuum valve. One simple movement to remove air. They preserve food longer
Alle Behälter haben eine Vakuum-Ventile. Die beseitigt die Luft mit einer einfachen Bewegung. Für eine längere Konservierung der Lebensmittel
Todos los contenedores están completos de valvúla al vacio. Elimina el aire con un movimiento muy fácil. Los alimentos se conservan a largo plazo

- **fuori l'aria**
- **fuori l'ossigeno**
- **ossidazione quasi assente**
- **lunga conservazione degli alimenti e dei sapori**

- **air out**
- **oxygen out**
- **almost absent oxidisation**
- **food and tastes long preservation**

- **Luft raus**
- **Sauerstoff raus**
- **Fast keine Oxydation**
- **Konservierung von Lebensmittel und Geschmack**

- **fuera aire**
- **fuera oxígeno**
- **oxidación casi inexistente**
- **aumenta la conservación de los alimentos y los sabores**

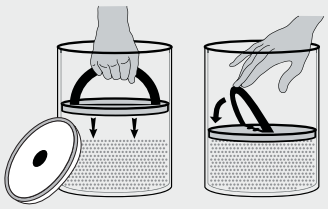

Tutti i contenitori sono completi di valvola per il sottovuoto.
Elimina l'aria con un semplice movimento.

All containers are equipped with a vacuum valve.
It eliminates air with a simple movement.

Alle Behälter haben ein Vakuum Ventil.
Luftabsaugung durch einen einfachen Handgriff.

Todos los contenedores están completos de válvulas para el vacío.
Elimina el aire con un simple movimiento.

CONTENITORI SOTTOVUOTO AIRSCAPE
VACUUM CONTAINERS AIRSCAPE
VAKUUMBEHÄLTER AIRSCAPE
CONTENEDORES AL VACÍO AIRSCAPE

Planetary Design

1 2 3

Photo	LF Code	Colour	Capacity (ml)	Dimensions (mm)
1	**1452008**	GLASS	850	ø 125x108
2	**1452009**	GLASS	1800	ø 125x180
3	**1452016**	GLASS	5000	ø 180x200

Tutti i contenitori sono completi di valvola per il sottovuoto. Elimina l'aria con un semplice gesto. Mantiene piu' a lungo gli alimenti
All containers are equipped with vacuum valve. One simple movement to remove air. They preserve food longer
Alle Behälter haben eine Vakuum-Ventile. Die beseitigt die Luft mit einer einfachen Bewegung. Für eine längere Konservierung der Lebensmittel
Todos los contenedores están completos de valvúla al vacio. Elimina el aire con un movimiento muy fácil. Los alimentos se conservan a largo plazo

- fuori l'aria
- fuori l'ossigeno
- ossidazione quasi assente
- lunga conservazione degli alimenti e dei sapori

- air out
- oxygen out
- almost absent oxidisation
- food and tastes long preservation

- Luft raus
- Sauerstoff raus
- Fast keine Oxydation
- Konservierung von Lebensmittel und Geschmack

- fuera aire
- fuera oxígeno
- oxidación casi inexistente
- aumenta la conservación de los alimentos y los sabores

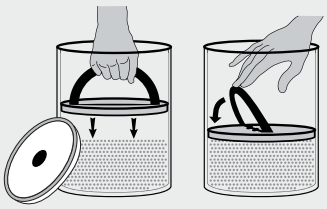

Tutti i contenitori sono completi di valvola per il sottovuoto.
Elimina l'aria con un semplice movimento.

All containers are equipped with a vacuum valve.
It eliminates air with a simple movement.

Alle Behälter haben ein Vakuum Ventil.
Luftabsaugung durch einen einfachen Handgriff.

Todos los contenedores están completos de válvulas para el vacío.
Elimina el aire con un simple movimiento.

CONTENITORI TERMICI PORTATILI
PORTABLE THERMAL CONTAINERS
TRAGBARE THERMOSBEHÄLTER
CONTENEDORES TÉRMICOS PORTATILES

Planetary Design

1 2

Photo	LF Code	Colour	Capacity (ml)	Dimensions (mm)
1	**1452090**	CHROME	470	ø 88x210
2	**1452095**	CHROME	470	ø 85x183

CUCCHIAI DOSACAFFE'
COFFEE DOSERS SPOONS
KAFFEEDOSIERLÖFFEL
CUCHARAS DOSIFICADORES CAFE

1

2

3

Photo	LF Code	Material	Capacity
1	**1069001**	PLASTIC	20 ml
2	**1069002**	STAINLESS STEEL - INOX	20 ml
3	**1394720**	STAINLESS STEEL - INOX	365 ml

CUCCHIAI DOSACAFFE' DELONGHI
COFFEE DOSERS SPOONS DELONGHI
KAFFEEDOSIERLÖFFEL DELONGHI
CUCHARAS DOSIFICADORES CAFE DELONGHI

1

2

Photo	LF Code	Material	Capacity
1	**1069006**	PLASTIC	---
2	**1069007**	PLASTIC	---

DETERGENTI ASCOR
DETERGENTS ASCOR
REINIGUNGSMITTEL ASCOR
DETERGENTES ASCOR

1

2

3

Photo	LF Code	Description	Notes
1	**1092001**	DETERGENT EXPRESS	100 TABS 1.0 g
2	**3092243**	DETERGENT EXPRESS LC	1 L
3	**3092095**	SCALE REMOVER BOILERS	6 Kg

DETERGENTI AXOR
DETERGENTS AXOR
REINIGUNGSMITTEL AXOR
DETERGENTES AXOR

1

2

3

Photo	LF Code	Description	Notes
1	**3092250**	SCALE REMOVER RIO	250 ml
2	**3092252**	DETERGENT COFFEE MAKER CLEANER	6 TABS
3	**3092251**	DETERGENT DE-CAF	10 BAGS 30 g

DETERGENTI CAFFENU
DETERGENTS CAFFENU
REINIGUNGSMITTEL CAFFENU
DETERGENTES CAFFENU

1 - NESPRESSO®

2 - NESPRESSO®

3

4

Photo	LF Code	Description	Notes
1	**1092011**	DETERGENT CAFFENU	5 CAPS 3 G
2	**1092012**	DETERGENT CAFFENU	10x5 CAPS 3 G
3	**1092013**	DISINCROSTANTE CAFFENU	200 ml
4	**1092016**	DISINCROSTANTE CAFFENU	9x200 ml

DETERGENTI DELONGHI
DETERGENTS DELONGHI
REINIGUNGSMITTEL DELONGHI
DETERGENTES DELONGHI

1

2

3

Photo	LF Code	Description	Notes
1	**3092258**	SCALE REMOVER ECODECALK	500 ml
2	**3092257**	SCALE REMOVER DESCALER	2x100 ml
3	**3092259**	DETERGENT MILK CLEAN	250 ml

DETERGENTI GAGGIA/SAECO
DETERGENTS GAGGIA/SAECO
REINIGUNGSMITTEL GAGGIA/SAECO
DETERGENTES GAGGIA/SAECO

1

2

3

4

5

Photo	LF Code	Description	Notes
1	**1092009**	DESCALER SAECO	250 ml
2	**5069083**	DESCALER GAGGIA	250 ml
3	**1092010**	DETERGENT SAECO	6 BAGS 2 g
4	**1092007**	DETERGENT SAECO	10 TABS 1.6 g
5	**1092005**	DETERGENT GAGGIA	10 TABS 1.6 g

DETERGENTI LF
DETERGENTS LF
REINIGUNGSMITTEL LF
DETERGENTES LF

1

2

3

Photo	LF Code	Description	Notes
1	**3092355**	DETERGENT CAPPUCCINO PERFECT	1 L
2	**1092006**	DETERGENT MILK SYSTEM	250 ml
3	**1092213**	DETERGENT GRIND CLEANER	340 g

DETERGENTI LF
DETERGENTS LF
REINIGUNGSMITTEL LF
DETERGENTES LF

1

2

3

4

5

6

Photo	LF Code	Description	Notes
1	**3092143**	DETERGENT COFFEE CLEAN	900 g
2	**3092543**	DETERGENT COFFEE CLEAN	500 g
3	**3092350**	DETERGENT COFFEE CLEAN	60 TABS 2.5 g
4	**3092351**	DETERGENT COFFEE CLEAN	15 BAGS 20 g
5	**3092352**	SCALE REMOVER SCALE CLEAN	1 Kg
6	**3092353**	SCALE REMOVER SCALE CLEAN	12 BAGS 25 g

DETERGENTI LUJO
LUJO DETERGENTS
LUJO REINIGER
DETERGENTES LUJO

lujo CLEAN®
for that perfect coffee pleasure!

1

2

3

4

5

Photo	LF Code	Description	Notes
1	**1092220**	DESCALER TWO IN ONE LUJO	250 ml
2	**1092221**	DESCALER LUJO TABLETS	30 TABS 16 g
3	**1092222**	DESCALER LUJO LC	750 ml
4	**1092223**	DESCALER LUJO GREENIE	750 ml
5	**1092224**	DESCALER LUJO LJ	700 ml

DETERGENTI LUJO
LUJO DETERGENTS
LUJO REINIGER
DETERGENTES LUJO

lujo CLEAN®
for that perfect coffee pleasure!

1

Photo	LF Code	Description	Notes
1	**1092202**	DETERGENT LUJO TABLETS	120 TABS 1.1 g
1	**1092203**	DETERGENT LUJO TABLETS	120 TABS 1.3 g
1	**1092204**	DETERGENT LUJO TABLETS	150 TABS 1.6 g
1	**1092205**	DETERGENT LUJO TABLETS	100 TABS 2.0 g
1	**1092206**	DETERGENT LUJO TABLETS	200 TABS 2.0 g
1	**1092207**	DETERGENT LUJO TABLETS	90 TABS 3.0 g
1	**1092208**	DETERGENT LUJO TABLETS	100 TABS 3.6 g

DETERGENTI LUJO
LUJO DETERGENTS
LUJO REINIGER
DETERGENTES LUJO

1

2

3

4

5

Photo	LF Code	Description	Notes
1	**1092211**	DETERGENT LUJO POWDER/PULVERE	1 Kg
2	**1092210**	DETERGENT LUJO POWDER/PULVERE	500 g
3	**1092209**	DETERGENT LUJO GRANULAR/GRANULARE	1 Kg
4	**1092200**	DETERGENT LUJO MILK FROTHER	1 L
5	**1092201**	DETERGENT LUJO MILK FROTHER	45 TABS 16 g

DETERGENTI PULY CAFF
DETERGENTS PULY CAFF
REINIGUNGSMITTEL PULY CAFF
DETERGENTES PULY CAFF

1 - NSF

2 - NSF

3 - NSF

4

Photo	LF Code	Description	Notes
1	**3092085**	DETERGENT PULY MILK PLUS	1 L
2	**3092254**	DETERGENT PULY MILK PLUS	14x25 ml
3	**3092088**	DETERGENT PULY MILK PLUS	4x25 ml
4	**3092242**	DETERGENT KIT PULY CAFF	---

DETERGENTI PULY CAFF
DETERGENTS PULY CAFF
REINIGUNGSMITTEL PULY CAFF
DETERGENTES PULY CAFF

1 - NSF

2 - NSF

3 - NSF

4 - NSF

5 - NSF

Photo	LF Code	Description	Notes
1	**3092074**	DETERGENT PULY CAFF PLUS	900 g
2	**3092075**	DETERGENT PULY CAFF PLUS	570 g
3	**3092077**	DETERGENT PULY CAFF PLUS	370 g
4	**3092078**	DETERGENT PULY CAFF PLUS	10 BAGS
5	**3092079**	DETERGENT PULY CAFF PLUS	60 TABS 2.5 g
5	**3092253**	DETERGENT PULY CAFF PLUS	100 TABS 1.35 g
5	**3092080**	DETERGENT PULY CAFF PLUS	100 TABS 1.0 g
5	**3092249**	DETERGENT PULY CAFF PLUS	70 TABS 0.5 g

DETERGENTI PULY CAFF
DETERGENTS PULY CAFF
REINIGUNGSMITTEL PULY CAFF
DETERGENTES PULY CAFF

coffee machine cleaner

1

2

3

4

5

Photo	LF Code	Description	Notes
1	**3092089**	DETERGENT PULY CLEANER BABY	10 BAGS 30 g
2	**3092076**	DETERGENT PULY GRIND CRISTALLI	10 BAGS
3	**3092090**	DETERGENT PULY CAFF BREW	120 TABS 4 g
4	**3092326**	DETERGENT BAR STERYL IGIENIC	1 L
5	**1092017**	DETERGENT PULY GRIND HOPPER	200 ml

DETERGENTI URNEX
DETERGENTS URNEX
REINIGUNGSMITTEL URNEX
DETERGENTES URNEX

1

2

3

4

5

Photo	LF Code	Description	Notes
1	**1092505**	DETERGENT CAFIZA2	900 g
1	**1092506**	DETERGENT CAFIZA	566 g
2	**1092510**	DETERGENT CAFIZA	100 TABS 2.0 g
2	**1092511**	DETERGENT CAFIZA	100 TABS 1.2 g
3	**1092500**	DETERGENT CAFIZA2	28 g
4	**1092532**	SCALE REMOVER DEZCAL	900 g
4	**1092540**	SCALE REMOVER DEZCAL	1 L
5	**1092531**	SCALE REMOVER DEZCAL	200 g
5	**1092530**	SCALE REMOVER DEZCAL	25 g

DETERGENTI URNEX
DETERGENTS URNEX
REINIGUNGSMITTEL URNEX
DETERGENTES URNEX

1 - NSF

2 - NSF

3 - NSF

4

5

Photo	LF Code	Description	Notes
1	**1092520**	DETERGENT RINZA CAPPUCCINATORE	1 L
2	**1092521**	DETERGENT RINZA CAPPUCCINATORE	1 L
3	**1092522**	DETERGENT RINZA CAPPUCCINATORE	40 TABS 10 g
4	**1092545**	DETERGENT GRINDZ	430 g
5	**1092003**	DETERGENT CAFÉ SPRAYZ	450 ml

DETERGENTI URNEX
DETERGENTS URNEX
REINIGUNGSMITTEL URNEX
DETERGENTES URNEX

1 - NSF

2

3

Photo	LF Code	Description	Notes
1	**1092014**	DETERGENT VENDZ	1 L
2	**1092501**	DETERGENT CUPZ	500 g
3	**2106235**	CAFE WIPZ	100 pcs

DIFFUSORI PORTADOCCIA ASTORIA/CMA
SHOWER HOLDER SPRAYER ASTORIA/CMA
VERTEILER DUSCHTRÄGER ASTORIA/CMA
DIFUSORES SOPORTE DUCHA ASTORIA/CMA

1

2

3

Photo	LF Code	Dimensions (external-height-hole)	Suitable for	For machine model
1	**1086501**	ø 59 mm - H 9.5 mm - ø 5.5 mm	ASTORIA/CMA 25627	ADRIA - ARGENTA - DENISE - DIVINA - DORA - GLORIA
2	**1086047**	ø 52 mm - H 9.5 mm - ø 5.5 mm	ASTORIA/CMA 25627005	PLUS4YOU
3	**1086046**	ø 52 mm - H 10.5 mm - ø 5.5 mm	ASTORIA/CMA 25627004	PLUS4YOU

DIFFUSORI PORTADOCCIA BEZZERA
SHOWER HOLDER SPRAYER BEZZERA
VERTEILER DUSCHTRÄGER BEZZERA
DIFUSORES SOPORTE DUCHA BEZZERA

1

Photo	LF Code	Dimensions (external-height-hole)	Suitable for	For machine model
1	**1086502**	ø 57 mm - H 7.5 mm - ø 5.5 mm	BEZZERA 5285501TP	BZ02 - BZ07 - BZ35 - BZ40 - BZ99 - B2000 - B3000 - B4000

DIFFUSORI PORTADOCCIA BFC
SHOWER HOLDERS BFC
VERTEILER DUSCHTRÄGER BFC
DIFUSORES PORTADUCHA BFC

1

Photo	LF Code	Dimensions (external-height-hole)	Suitable for	For machine model
1	**1086595**	ø 58.5 mm - H 7.5 mm - ø 6.5 mm	BFC 4650083	GALILEO - GRANDOGE - LIRA - OPERA

DIFFUSORI PORTADOCCIA CARIMALI
SHOWER HOLDER SPRAYER CARIMALI
VERTEILER DUSCHTRÄGER CARIMALI
DIFUSORES SOPORTE DUCHA CARIMALI

1

Photo	LF Code	Dimensions (external-height-hole)	Suitable for	For machine model
1	**1086048**	ø 57.5 mm - H 14 mm - ø 5 mm	CARIMALI 22.01225.NP	ETABETA - ETABETAV2 - E9 - KIKKO - PRATICA - TEMASTYLE

DIFFUSORI PORTADOCCIA CASADIO
SHOWER HOLDER SPRAYER CASADIO
VERTEILER DUSCHTRÄGER CASADIO
DIFUSORES SOPORTE DUCHA CASADIO

1

Photo	LF Code	Dimensions (external-height-hole)	Suitable for	For machine model
1	**1086003**	ø 56 mm - H 8 mm - ø 18 mm	CASADIO 457341008	DAFNE - DIECIA - DIECIS - DODICIA - DODICIS

DIFFUSORI PORTADOCCIA CIMBALI
SHOWER HOLDER SPRAYER CIMBALI
VERTEILER DUSCHTRÄGER CIMBALI
DIFUSORES SOPORTE DUCHA CIMBALI

1

Photo	LF Code	Dimensions (external-height-hole)	Suitable for	For machine model
1	**1086003**	ø 56 mm - H 8 mm - ø 18 mm	CIMBALI 457-341-008	M27/2008

DIFFUSORI PORTADOCCIA CONTI
SHOWER HOLDER SPRAYER CONTI
VERTEILER DUSCHTRÄGER CONTI
DIFUSORES SOPORTE DUCHA CONTI

1

2

Photo	LF Code	Dimensions (external-height-hole)	Suitable for	For machine model
1	**1086005**	ø 56.5 mm - H 9 mm - M5	CONTI 404740	CLUB - XEOS2
2	**1086508**	ø 57 mm - H 13 mm - ø 43 mm	CONTI 172030	CLASSICA PM

DIFFUSORI PORTADOCCIA DELONGHI
SHOWER HOLDER SPRAYER DELONGHI
VERTEILER DUSCHTRÄGER DELONGHI
DIFUSORES SOPORTE DELONGHI

1

Photo	LF Code	Dimensions (external-height-hole)	Suitable for	For machine model
1	**1086055**	ø 43,5 mm	DELONGHI 5332140300	EAM3300S - EAM4000 - ESAM3300 - ESAM4300 - ESAM4400 - ESAM6600

DIFFUSORI PORTADOCCIA DIDIESSE
SHOWER HOLDER SPRAYER DIDIESSE
VERTEILER DUSCHTRÄGER DIDIESSE
DIFUSORES SOPORTE DIDIESSE

1

2

Photo	LF Code	Dimensions (external-height-hole)	Suitable for	For machine model
1	**1086053**	---	DIDIESSE FR034	FROG
2	**1528150**	---	DIDIESSE FR031	FROG

DIFFUSORI PORTADOCCIA ELEKTRA
SHOWER HOLDER SPRAYER ELEKTRA
VERTEILER DUSCHTRÄGER ELEKTRA
DIFUSORES SOPORTE DUCHA ELEKTRA

1

2

Photo	LF Code	Dimensions (external-height-hole)	Suitable for	For machine model
1	**1086002**	ø 57 mm - H 8.5 mm - ø 5 mm	ELEKTRA 01252014	CLASSIC - KAPPA - MICROCASA - MODERN - SIXTIES
2	**5048739**	ø 58 mm - H 7 mm - ø 5 mm	ELEKTRA 02653035	MINIVERTICALE

DIFFUSORI PORTADOCCIA FAEMA
SHOWER HOLDER SPRAYER FAEMA
VERTEILER DUSCHTRÄGER FAEMA
DIFUSORES SOPORTE DUCHA FAEMA

1

2

Photo	LF Code	Dimensions (external-height-hole)	Suitable for	For machine model
1	**1081004**	ø 58.5 mm - H 9 mm - ø 5.5 mm	FAEMA 4161131768	COMPACT - DUE - EXPRESS - E91 - SPECIAL
2	**1086003**	ø 56 mm - H 8 mm - ø 18 mm	FAEMA 457341008	DUE - EMBLEMA - ENOVA - E61 - E91 - E92 - E97 - E98

DIFFUSORI PORTADOCCIA FIORENZATO CS
SHOWER HOLDER SPRAYER FIORENZATO CS
VERTEILER DUSCHTRÄGER FIORENZATO CS
DIFUSORES SOPORTE DUCHA FIORENZATO CS

1

Photo	LF Code	Dimensions (external-height-hole)	Suitable for	For machine model
1	**1086595**	ø 58.5 mm - H 7.5 mm - ø 6.5 mm	FIORENZATO CS A2200236	ACCADEMIA - VENEZIA

DIFFUSORI PORTADOCCIA FRACINO
SHOWER HOLDERS FRACINO
VERTEILER DUSCHTRÄGER FRACINO
DIFUSORES PORTADUCHA FRACINO

1

Photo	LF Code	Dimensions (external-height-hole)	Suitable for	For machine model
1	**1086050**	ø 59 mm - H 9 mm - ø 5.5 mm	FRACINO FC104B	BAMBINO - CHERUB - HEAVENLY

DIFFUSORI PORTADOCCIA GAGGIA
SHOWER HOLDER SPRAYER GAGGIA
VERTEILER DUSCHTRÄGER GAGGIA
DIFUSORES SOPORTE DUCHA GAGGIA

1

2

3

Photo	LF Code	Dimensions (external-height-hole)	Suitable for	For machine model
1	**1086509**	ø 57 mm - 14 mm - M5	GAGGIA WGA16G1002	DECO - D90 - E90 - GD - GE - LCD - TS - XD - XE
2	**5047151**	ø 58 mm - H 14.5 mm - M5	GAGGIA DY0036/A	ACHILLE - CAREZZA - CLASSIC - NEWBABY06
3	**1086054**	ø 39,5 mm	GAGGIA 11023086	ACCADEMIA

DIFFUSORI PORTADOCCIA GRIMAC
SHOWER HOLDER SPRAYER GRIMAC
VERTEILER DUSCHTRÄGER GRIMAC
DIFUSORES SOPORTE DUCHA GRIMAC

1

2

Photo	LF Code	Dimensions (external-height-hole)	Suitable for	For machine model
1	**1086020**	ø 55 mm - H 45 mm	GRIMAC 1210800002 - MG126N	NEWCIALDAVAPOR - NUVOLA - OPALE - TERRY
2	**1086595**	ø 58.5 mm - H 7.5 mm - ø 6.5 mm	GRIMAC A2200236	G11

DIFFUSORI PORTADOCCIA ISOMAC
SHOWER HOLDERS ISOMAC
DUSCHENHALTER ISOMAC
DIFUSORES PORTADUCHA ISOMAC

1

2

Photo	LF Code	Dimensions (external-height-hole)	Suitable for	For machine model
1	**1086052**	ø 56 mm - H 13.5 mm - ø 12.5 mm	ISOMAC IS000803	MAVERICK
2	**1086595**	ø 58.5 mm - H 7.5 mm - ø 6.5 mm	ISOMAC ISFLA6075	VENUS

DIFFUSORI PORTADOCCIA LA PICCOLA
SHOWER HOLDER SCREENS LA PICCOLA
VERTEILER DUSCHTRÄGER LA PICCOLA
DIFUSORES PORTADUCHA LA PICCOLA

1

Photo	LF Code	Dimensions (external-height-hole)	Suitable for	For machine model
1	**1086056**	ø 55 mm - H 21 mm	LA PICCOLA A05	CECILIA - PICCOLA

DIFFUSORI PORTADOCCIA MARZOCCO
SHOWER HOLDER SPRAYER MARZOCCO
VERTEILER DUSCHTRÄGER MARZOCCO
DIFUSORES SOPORTE DUCHA MARZOCCO

1

Photo	LF Code	Dimensions (external-height-hole)	Suitable for	For machine model
1	**1086511**	ø 55.5 mm - H 13 mm - M6	MARZOCCO L105	FB/70 - LINEA

DIFFUSORI PORTADOCCIA NUOVA SIMONELLI
SHOWER HOLDER SPRAYERS NUOVA SIMONELLI
VERTEILER DUSCHTRÄGER NUOVA SIMONELLI
DIFUSORES SOPORTE DUCHA NUOVA SIMONELLI

1

2

3

Photo	LF Code	Dimensions (external-height-hole)	Suitable for	For machine model
1	**1326001**	ø 57.5 mm - H 9 mm - ø 6.5 mm	NUOVA SIMONELLI 07300183.5	APPIA - AURELIA
2	**1326037**	ø 57.5 mm - H 7 mm - ø 6.5 mm	NUOVA SIMONELLI 07300183	MAC2000 - OSCAR - PREMIER
3	**1326036**	ø 72 mm - H 19.5 mm - M25	NUOVA SIMONELLI 98004000	MACCUP - OPTIMA - PROGRAMVIP

DIFFUSORI PORTADOCCIA PAVONI
SHOWER HOLDER SPRAYERS PAVONI
VERTEILER DUSCHTRÄGER PAVONI
DIFUSORES SOPORTE DUCHA PAVONI

1

2

3

Photo	LF Code	Dimensions (external-height-hole)	Suitable for	For machine model
1	**1326100**	ø 57 mm - 15.5 mm - ø 10.5 mm	PAVONI 31109171	BAR - BART - PUB
2	**1086037**	ø 59 mm - H 32 mm	PAVONI 0R20310010	MICROPOD
3	**1086036**	ø 59 mm - H 32 mm	PAVONI 0R20310020	MICROPOD

DIFFUSORI PORTADOCCIA PROMAC
SHOWER HOLDER SPRAYERS PROMAC
VERTEILER DUSCHTRÄGER PROMAC
DIFUSORES SOPORTE DUCHA PROMAC

1

Photo	LF Code	Dimensions (external-height-hole)	Suitable for	For machine model
1	**1086014**	ø 58 mm - H 10 mm - ø 16 mm	PROMAC 20200181	CLUBME - CLUBPU

DIFFUSORI PORTADOCCIA QUICK MILL
SHOWER HOLDERS QUICK MILL
DUSCHENHALTER QUICK MILL
DIFUSORES PORTADUCHA QUICK MILL

1

Photo	LF Code	Dimensions (external-height-hole)	Suitable for	For machine model
1	**1086051**	ø 57 mm - H 7 mm - ø 6.5 mm	QUICK MILL AL0900DDF	0820

DIFFUSORI PORTADOCCIA RANCILIO
SHOWER HOLDER SPRAYERS RANCILIO
VERTEILER DUSCHTRÄGER RANCILIO
DIFUSORES SOPORTE DUCHA RANCILIO

1

Photo	LF Code	Dimensions (external-height-hole)	Suitable for	For machine model
1	**1086014**	ø 58 mm - H 10 mm - ø 16 mm	RANCILIO 20200181	CLASSE10 - CLASSE6 - CLASSE7 - CLASSE8 - CLASSE9 - EPOCA

DIFFUSORI PORTADOCCIA RDL
SHOWER HOLDER SPRAYERS RDL
VERTEILER DUSCHTRÄGER RDL
DIFUSORES SOPORTE DUCHA RDL

1

2

Photo	LF Code	Dimensions (external-height-hole)	Suitable for	For machine model
1	**1086037**	ø 59 mm - H 32 mm	RDL 20310010	MINI - MINICAP
2	**1086036**	ø 59 mm - H 32 mm	RDL 20310020	MINI - MINICAP

DIFFUSORI PORTADOCCIA RENEKA
SHOWER HOLDER SPRAYERS RENEKA
VERTEILER DUSCHTRÄGER RENEKA
DIFUSORES SOPORTE DUCHA RENEKA

1

Photo	LF Code	Dimensions (external-height-hole)	Suitable for	For machine model
1	**1086506**	ø 40 mm - H 4.5 mm - ø 6.5 mm	RENEKA 9003471	LC - PLUS - VIVA - VIVAE - VIVAS - XLBASIC

DIFFUSORI PORTADOCCIA ROYAL
SHOWER HOLDERS ROYAL
VERTEILER DUSCHTRÄGER ROYAL
DIFUSORES PORTADUCHA ROYAL

1

Photo	LF Code	Dimensions (external-height-hole)	Suitable for	For machine model
1	**1086595**	ø 58.5 mm - H 7.5 mm - ø 6.5 mm	ROYAL 4650083	DOGARESSA - SYNCHRO

DIFFUSORI PORTADOCCIA SAECO
SHOWER HOLDER SPRAYERS SAECO
VERTEILER DUSCHTRÄGER SAECO
DIFUSORES SOPORTE DUCHA SAECO

1

Photo	LF Code	Dimensions (external-height-hole)	Suitable for	For machine model
1	**1086509**	ø 57 mm - 14 mm - M5	SAECO WGA16G1002	AROMA

DIFFUSORI PORTADOCCIA SAN MARCO
SHOWER HOLDER SPRAYERS SAN MARCO
VERTEILER DUSCHTRÄGER SAN MARCO
DIFUSORES SOPORTE DUCHA SAN MARCO

1

Photo	LF Code	Dimensions (external-height-hole)	Suitable for	For machine model
1	**1086001**	ø 54 mm - H 12 mm - ø 5 mm	SAN MARCO 206823	105
1	**1086516**	ø 54 mm - H 12 mm - ø 5.5 mm	SAN MARCO 205405	NEW105 - 100 - 95 - 85

DIFFUSORI PORTADOCCIA SANREMO
SHOWER HOLDER SPRAYERS SANREMO
VERTEILER DUSCHTRÄGER SANREMO
DIFUSORES SOPORTE DUCHA SANREMO

1

2

Photo	LF Code	Dimensions (external-height-hole)	Suitable for	For machine model
1	**1086049**	ø 57 mm - H 6.5 mm - ø 10 mm	SANREMO 10052248	AMALFI - CAPRI - PISA - ZOE
2	**1086595**	ø 58.5 mm - H 7.5 mm - ø 6.5 mm	SANREMO 10052230	VENEZIA

DIFFUSORI PORTADOCCIA SPAZIALE
SHOWER HOLDER SPRAYERS SPAZIALE
VERTEILER DUSCHTRÄGER SPAZIALE
DIFUSORES SOPORTE DUCHA SPAZIALE

1

Photo	LF Code	Dimensions (external-height-hole)	Suitable for	For machine model
1	**1086006**	ø 53 mm - H 15 mm - ø 5.5 mm	SPAZIALE 01942	S40 - S5 - S5COMPACT
1	**1086007**	ø 53 mm - H 13 mm - ø 5.5 mm	SPAZIALE 00641	PROFESSIONALE - S1 - S40 - S5 - S5COMPACT
1	**1086521**	ø 53 mm - H 11 mm - ø 5.5 mm	SPAZIALE 01941	S40 - S5 - S5COMPACT

DIFFUSORI PORTADOCCIA VICTORIA ARDUINO
SHOWER HOLDER SPRAYERS VICTORIA ARDUINO
VERTEILER DUSCHTRÄGER VICTORIA ARDUINO
DIFUSORES SOPORTE DUCHA VICTORIA ARDUINO

1

2

Photo	LF Code	Dimensions (external-height-hole)	Suitable for	For machine model
1	**1086038**	ø 57 mm - H 15 mm - M5	VICTORIA ARDUINO 40700005	ATHENAS - VENUSBAR - VENUSCENTURY
2	**1326001**	ø 57.5 mm - H 9 mm - ø 6.5 mm	VICTORIA ARDUINO 07300183.5	ADONIS
2	**1326037**	ø 57.5 mm - H 7 mm - ø 6.5 mm	VICTORIA ARDUINO 07300183	VENUSFAMILY

DIFUSORI PORTADOCCIA WEGA
SHOWER HOLDER SPRAYERS WEGA
VERTEILER DUSCHTRÄGER WEGA
DIFUSORES SOPORTE DUCHA WEGA

1

2

3

Photo	LF Code	Dimensions (external-height-hole)	Suitable for	For machine model
1	**1086047**	ø 52 mm - H 9.5 mm - ø 5.5 mm	WEGA WY25627005	CONCEPT52
2	**1086046**	ø 52 mm - H 10.5 mm - ø 5.5 mm	WEGA WY25627004	CONCEPT52
3	**1086501**	ø 59 mm - H 9.5 mm - ø 5.5 mm	WEGA WY25627	CONCEPT56 - VENUS

All catalogues always with you, anytime and anywhere…

www.lfspareparts724.com

Docce erogazione gruppo caffè
Shower screens for brew group
Auslaufduschen für Kaffeegruppen
Duchas erogación grupo café

DOCCE EROGAZIONE ASTORIA/CMA
SHOWER SCREENS ASTORIA/CMA
AUSLAUFDUSCHEN ASTORIA/CMA
DUCHAS EROGACIÓN ASTORIA/CMA

1

2

3

4

5

Photo	LF Code	Dimensions	Suitable for	For machine model
1	**1081041**	ø 48.0 mm	ASTORIA/CMA 27100001	PLUS4YOU
2	**1081006**	ø 51.5 mm	ASTORIA/CMA 27100	ARGENTA - BRAVA - DENISE - DIVINA - DORA - GLORIA
3	**1081007**	ø 51.5 mm	ASTORIA/CMA 27100	ARGENTA - BRAVA - DENISE - DIVINA - DORA - GLORIA
4	**1081002**	ø 51.5 mm	ASTORIA/CMA 27100	ARGENTA - BRAVA - DENISE - DIVINA - DORA - GLORIA
5	**1081003**	ø 57.5 mm	ASTORIA/CMA 27101	RAPALLO AL

DOCCE EROGAZIONE ASTORIA/CMA "DI PRECISIONE"
"PRECISION" SHOWER SCREENS ASTORIA/CMA
"FEINMECHANISCHE" AUSLAUFDUSCHEN ASTORIA/CMA
DUCHAS EROGACIÓN ASTORIA/CMA "DE PRECISIÓN"

1

2

3

4

5 - NANOQUARTZ

Photo	LF Code	Dimensions	Membrane	Suitable for	For machine model
1	**1460210**	ø 48.0 mm	200 µM	ASTORIA/CMA	PLUS4YOU
2	**1460212**	ø 48.0 mm	35 µM	ASTORIA/CMA	PLUS4YOU
3	**1460200**	ø 51.5 mm	200 µM	ASTORIA/CMA	ARGENTA - BRAVA - DENISE - DIVINA - DORA - GLORIA
4	**1460205**	ø 51.5 mm	35 µM	ASTORIA/CMA	ARGENTA - BRAVA - DENISE - DIVINA - DORA - GLORIA
5	**1081600**	ø 51.5 mm	200 µM NANOTEC	ASTORIA/CMA	ARGENTA - BRAVA - DENISE - DIVINA - DORA - GLORIA

Docce progettate per ottenere la perfetta estrazione del caffè , acciaio Aisi 316 , certificate alimentare
Showers designed to obtain a perfect coffee brewing, Aisi 316 steel, food safe
Die Duschen wurden für die perfekte Kaffeeextraktion hergestellt,aus Aisi316 Stahl,lebensmitteltauglich-zertifiziert
Duchas planeadas para obtener la perfecta extracción del café, acero Aisi 316, certificadas uso alimentario

DOCCE EROGAZIONE AZKOYEN
SHOWER SCREENS AZKOYEN
AUSLAUFDUSCHEN AZKOYEN
DUCHAS EROGACIÓN AZKOYEN

1

2

3

4

5

Photo	LF Code	Dimensions	Suitable for	For machine model
1	**1081072**	ø 54 mm	AZKOYEN 10013360	---
2	**1081016**	ø 60 mm	AZKOYEN	---
3	**1081116**	ø 60 mm	AZKOYEN	---
4	**1081216**	ø 60 mm	AZKOYEN	---
5	**1081516**	ø 60 mm	AZKOYEN	---

DOCCE EROGAZIONE AZKOYEN "DI PRECISIONE"
"PRECISION" SHOWER SCREENS AZKOYEN
"FEINMECHANISCHE" AUSLAUFDUSCHEN AZKOYEN
DUCHAS EROGACIÓN AZKOYEN "DE PRECISIÓN"

1

2

3 - NANOQUARTZ

Photo	LF Code	Dimensions	Membrane	Suitable for	For machine model
1	**1460201**	ø 60 mm	200 µm	AZKOYEN	---
2	**1460206**	ø 60 mm	35 µm	AZKOYEN	---
3	**1081601**	ø 60 mm	200 µm NANOTEC	AZKOYEN	---

Docce progettate per ottenere la perfetta estrazione del caffè , acciaio Aisi 316 , certificate alimentare
Showers designed to obtain a perfect coffee brewing, Aisi 316 steel, food safe
Die Duschen wurden für die perfekte Kaffeeextraktion hergestellt,aus Aisi316 Stahl,lebensmitteltauglich-zertifiziert
Duchas planeadas para obtener la perfecta extracción del café, acero Aisi 316, certificadas uso alimentario

DOCCE EROGAZIONE BEZZERA
SHOWER SCREENS BEZZERA
AUSLAUFDUSCHEN BEZZERA
DUCHAS EROGACIÓN BEZZERA

1

2

3

4

Photo	LF Code	Dimensions	Suitable for	For machine model
1	**1081016**	ø 60.0 mm	BEZZERA 5470512	B2000AL - ELLISSE AL (NEW)
2	**1081116**	ø 60.0 mm	BEZZERA 5470512	B2000AL - ELLISSE AL (NEW)
3	**1081216**	ø 60.0 mm	BEZZERA 5470512	B2000AL - ELLISSE AL (NEW)
4	**1081516**	ø 60.0 mm	BEZZERA 5470512	B2000AL - ELLISSE AL (NEW)

DOCCE EROGAZIONE BEZZERA
SHOWER SCREENS BEZZERA
AUSLAUFDUSCHEN BEZZERA
DUCHAS EROGACIÓN BEZZERA

1

2

3

4

5

Photo	LF Code	Dimensions	Suitable for	For machine model
1	**1081006**	ø 51.5 mm	BEZZERA 5470504	B2000 - B2000DE - MB3000 - B4000 - B4000DE - HOBBY
2	**1081007**	ø 51.5 mm	BEZZERA 5470504	B2000 - B2000DE - MB3000 - B4000 - B4000DE - HOBBY
3	**1081036**	ø 57.5 mm	BEZZERA 5470501	B2000 - B2000DE - MB3000 - B4000 - B4000DE - ELLISSE
4	**1081536**	ø 57.5 mm	BEZZERA 5470501	B2000 - B2000DE - MB3000 - B4000 - B4000DE - ELLISSE
5	**1081003**	ø 57.5 mm	BEZZERA 5470502	B2000AL - ELLISSE AL

Docce erogazione gruppo caffè
Shower screens for brew group
Auslaufduschen für Kaffeegruppen
Duchas erogación grupo café

DOCCE EROGAZIONE BEZZERA "DI PRECISIONE"
PRECISION SHOWER SCREENS BEZZERA
PRÄZISIONSDUSCHEN BEZZERA
DUCHAS EROGACIÓN DE PRECISIÓN BEZZERA

1

2

3

4

5 - NANOQUARTZ

6 - NANOQUARTZ

Photo	LF Code	Dimensions	Membrane	Suitable for	For machine model
1	**1460200**	ø 51.5 mm	200 µM	BEZZERA	B2000 - B2000DE - MB3000 - B4000 - B4000DE - HOBBY
2	**1460205**	ø 51.5 mm	35 µM	BEZZERA	B2000 - B2000DE - MB3000 - B4000 - B4000DE - HOBBY
3	**1460203**	ø 57.0 mm	200 µM	BEZZERA	B2000 - B2000DE - MB3000 - B4000 - B4000DE - ELLISSE
4	**1460208**	ø 57.0 mm	35 µM	BEZZERA	B2000 - B2000DE - MB3000 - B4000 - B4000DE - ELLISSE
5	**1081600**	ø 51.5 mm	200 µM NANOTEC	BEZZERA	B2000 - B2000DE - MB3000 - B4000 - B4000DE - HOBBY
6	**1081602**	ø 57.0 mm	200 µM NANOTEC	BEZZERA	B2000 - B2000DE - MB3000 - B4000 - B4000DE - ELLISSE

Docce progettate per ottenere la perfetta estrazione del caffè , acciaio Aisi 316 , certificate alimentare
Showers designed to obtain a perfect coffee brewing, Aisi 316 steel, food safe
Die Duschen wurden für die perfekte Kaffeeextraktion hergestellt,aus Aisi316 Stahl,lebensmitteltauglich-zertifiziert
Duchas planeadas para obtener la perfecta extracción del café, acero Aisi 316, certificadas uso alimentario

DOCCE EROGAZIONE BEZZERA "DI PRECISIONE"
PRECISION SHOWER SCREENS BEZZERA
PRÄZISIONSDUSCHEN BEZZERA
DUCHAS EROGACIÓN DE PRECISIÓN BEZZERA

1

2

3 - NANOQUARTZ

Photo	LF Code	Dimensions	Membrane	Suitable for	For machine model
1	**1460201**	ø 60.0 mm	200 µM	BEZZERA	B2000AL - ELLISSE AL (NEW)
2	**1460206**	ø 60.0 mm	35 µM	BEZZERA	B2000AL - ELLISSE AL (NEW)
3	**1081601**	ø 60.0 mm	200 µM NANOTEC	BEZZERA	B2000AL - ELLISSE AL (NEW)

Docce progettate per ottenere la perfetta estrazione del caffè , acciaio Aisi 316 , certificate alimentare
Showers designed to obtain a perfect coffee brewing, Aisi 316 steel, food safe
Die Duschen wurden für die perfekte Kaffeeextraktion hergestellt,aus Aisi316 Stahl,lebensmitteltauglich-zertifiziert
Duchas planeadas para obtener la perfecta extracción del café, acero Aisi 316, certificadas uso alimentario

DOCCE EROGAZIONE BFC
SHOWER SCREENS BFC
AUSLAUFDUSCHEN BFC
DUCHAS EROGACIÓN BFC

1

2

3

4

5

Photo	LF Code	Dimensions	Suitable for	For machine model
1	**1081007**	ø 51.5 mm	BFC 4630033	GALILEO - LIRA - OPERA
2	**1081016**	ø 60.0 mm	BFC 0520080	GALILEO - JUNIOR - LIRA - MONZA - IMOLA - MARANELLO
3	**1081116**	ø 60.0 mm	BFC 0520080	GALILEO - JUNIOR - LIRA - MONZA - IMOLA - MARANELLO
4	**1081216**	ø 60.0 mm	BFC 0520080	GALILEO - JUNIOR - LIRA - MONZA - IMOLA - MARANELLO
5	**1081516**	ø 60.0 mm	BFC 0520080	GALILEO - JUNIOR - LIRA - MONZA - IMOLA - MARANELLO

DOCCE EROGAZIONE BFC "DI PRECISIONE"
"PRECISION" SHOWER SCREENS BFC
"FEINMECHANISCHE" AUSLAUFDUSCHEN BFC
DUCHAS EROGACIÓN BFC "DE PRECISIÓN"

1

2

3 - NANOQUARTZ

4

5

6 - NANOQUARTZ

Photo	LF Code	Dimensions	Membrane	Suitable for	For machine model
1	**1460200**	ø 51.5 mm	200 µM	BFC	GALILEO - LIRA - OPERA
2	**1460205**	ø 51.5 mm	35 µM	BFC	GALILEO - LIRA - OPERA
3	**1081600**	ø 51.5 mm	200 µM NANOTEC	BFC	GALILEO - LIRA - OPERA
4	**1460201**	ø 60.0 mm	200 µM	BFC	GALILEO - JUNIOR - LIRA - MONZA - IMOLA - MARANELLO
5	**1460206**	ø 60.0 mm	35 µM	BFC	GALILEO - JUNIOR - LIRA - MONZA - IMOLA - MARANELLO
6	**1081601**	ø 60.0 mm	200 µM NANOTEC	BFC	GALILEO - JUNIOR - LIRA - MONZA - IMOLA - MARANELLO

Docce progettate per ottenere la perfetta estrazione del caffè , acciaio Aisi 316 , certificate alimentare
Showers designed to obtain a perfect coffee brewing, Aisi 316 steel, food safe
Die Duschen wurden für die perfekte Kaffeeextraktion hergestellt,aus Aisi316 Stahl,lebensmitteltauglich-zertifiziert
Duchas planeadas para obtener la perfecta extracción del café, acero Aisi 316, certificadas uso alimentario

Docce erogazione gruppo caffè
Shower screens for brew group
Auslaufduschen für Kaffeegruppen
Duchas erogación grupo café

DOCCE EROGAZIONE BIALETTI
SHOWER SCREENS BIALETTI
AUSLAUFDUSCHEN BIALETTI
DUCHAS SALIDAS BIALETTI

1

2

3

4

5

6

Photo	LF Code	Dimensions	Suitable for	For machine model
1	**1081300**	1 CUP	BIALETTI 0109741	MOKA EXPRESS - DAMA - FIAMMETTA - BREAK - MINI EXPRESS
2	**1081301**	2 CUPS	BIALETTI 0109744	MOKA EXPRESS - DAMA - MOKA ELETTRIKA - MINI EXPRESS
3	**1081302**	3/4 CUPS	BIALETTI 0109742	MOKA EXPRESS - DAMA - FIAMMETTA - BREAK - MOKA ELODY SPORT
4	**1081303**	4 CUPS	BIALETTI 0109729	MOKA EXPRESS
5	**1081305**	9 CUPS	BIALETTI 0109745	MOKA EXPRESS - DAMA
6	**1081306**	12 CUPS	BIALETTI 0109746	MOKA EXPRESS

DOCCE EROGAZIONE BIALETTI
SHOWER SCREENS BIALETTI
AUSLAUFDUSCHEN BIALETTI
DUCHAS SALIDAS BIALETTI

1

Photo	LF Code	Dimensions	Suitable for	For machine model
1	**1081113**	ø 34 mm	BIALETTI 912990440	MOKONA CF40

DOCCE EROGAZIONE BIANCHI
SHOWER SCREENS BIANCHI
AUSLAUFDUSCHEN BIANCHI
DUCHAS EROGACIÓN BIANCHI

1

2

3

4

Photo	LF Code	Dimensions	Suitable for	For machine model
1	**1081016**	ø 60.0 mm	BIANCHI 16022711	LUCIA - SARA - SOFIA
2	**1081116**	ø 60.0 mm	BIANCHI 16022711	LUCIA - SARA - SOFIA
3	**1081216**	ø 60.0 mm	BIANCHI 16022711	LUCIA - SARA - SOFIA
4	**1081516**	ø 60.0 mm	BIANCHI 16022711	LUCIA - SARA - SOFIA

DOCCE EROGAZIONE BIANCHI "DI PRECISIONE"
"PRECISION" SHOWER SCREENS BIANCHI
"FEINMECHANISCHE" AUSLAUFDUSCHEN BIANCHI
DUCHAS EROGACIÓN BIANCHI "DE PRECISIÓN"

1

2

3 - NANOQUARTZ

Photo	LF Code	Dimensions	Membrane	Suitable for	For machine model
1	**1460201**	ø 60.0 mm	200 µM	BIANCHI	LUCIA - SARA - SOFIA
2	**1460206**	ø 60.0 mm	35 µM	BIANCHI	LUCIA - SARA - SOFIA
3	**1081601**	ø 60.0 mm	200 µM NANOTEC	BIANCHI	LUCIA - SARA - SOFIA

Docce progettate per ottenere la perfetta estrazione del caffè , acciaio Aisi 316 , certificate alimentare
Showers designed to obtain a perfect coffee brewing, Aisi 316 steel, food safe
Die Duschen wurden für die perfekte Kaffeeextraktion hergestellt,aus Aisi316 Stahl,lebensmitteltauglich-zertifiziert
Duchas planeadas para obtener la perfecta extracción del café, acero Aisi 316, certificadas uso alimentario

DOCCE EROGAZIONE BRASILIA
SHOWER SCREENS BRASILIA
AUSLAUFDUSCHEN BRASILIA
DUCHAS EROGACIÓN BRASILIA

1

2

3

Photo	LF Code	Dimensions	Suitable for	For machine model
1	**1081039**	ø 34.0 mm	BRASILIA 06216.0.40.01	MINIPOD
2	**1081002**	ø 51.5 mm	BRASILIA 00562.0.40.01	CENTURY - CLUB - LADY - PORTOFINO - ROMA
3	**1081009**	ø 61.0 mm	BRASILIA 11362.0.40.01	CADETTA - PORTOFINO AL - 205R

DOCCE EROGAZIONE BRASILIA
SHOWER SCREENS BRASILIA
AUSLAUFDUSCHEN BRASILIA
DUCHAS EROGACIÓN BRASILIA

1

2

3

4

Photo	LF Code	Dimensions	Suitable for	For machine model
1	**1081016**	ø 60.0 mm	BRASILIA 04214.0.40.01	CENTURY - EXCELSIOR - FIRENZE - GRADISCA - PORTOFINO
2	**1081116**	ø 60.0 mm	BRASILIA 04214.0.40.01	CENTURY - EXCELSIOR - FIRENZE - GRADISCA - PORTOFINO
3	**1081216**	ø 60.0 mm	BRASILIA 04214.0.40.01	CENTURY - EXCELSIOR - FIRENZE - GRADISCA - PORTOFINO
4	**1081516**	ø 60.0 mm	BRASILIA 04214.0.40.01	CENTURY - EXCELSIOR - FIRENZE - GRADISCA - PORTOFINO

Docce erogazione gruppo caffè
Shower screens for brew group
Auslaufduschen für Kaffeegruppen
Duchas erogación grupo café

DOCCE EROGAZIONE BRASILIA "DI PRECISIONE"
PRECISION SHOWER SCREENS BRASILIA
PRÄZISIONSDUSCHEN BRASILIA
DUCHAS EROGACIÓN DE PRECISIÓN BRASILIA

1

2

3 - NANOQUARTZ

4

5

6 - NANOQUARTZ

Photo	LF Code	Dimensions	Membrane	Suitable for	For machine model
1	**1460200**	ø 51.5 mm	200 µM	BRASILIA	CENTURY - CLUB - LADY - PORTOFINO - ROMA
2	**1460205**	ø 51.5 mm	35 µM	BRASILIA	CENTURY - CLUB - LADY - PORTOFINO - ROMA
3	**1081600**	ø 51.5 mm	200 µM NANOTEC	BRASILIA	CENTURY - CLUB - LADY - PORTOFINO - ROMA
4	**1460201**	ø 60.0 mm	200 µM	BRASILIA	CENTURY - EXCELSIOR - FIRENZE - GRADISCA - PORTOFINO
5	**1460206**	ø 60.0 mm	35 µM	BRASILIA	CENTURY - EXCELSIOR - FIRENZE - GRADISCA - PORTOFINO
6	**1081601**	ø 60.0 mm	200 µM NANOTEC	BRASILIA	CENTURY - EXCELSIOR - FIRENZE - GRADISCA - PORTOFINO

Docce progettate per ottenere la perfetta estrazione del caffè , acciaio Aisi 316 , certificate alimentare
Showers designed to obtain a perfect coffee brewing, Aisi 316 steel, food safe
Die Duschen wurden für die perfekte Kaffeeextraktion hergestellt,aus Aisi316 Stahl,lebensmitteltauglich-zertifiziert
Duchas planeadas para obtener la perfecta extracción del café, acero Aisi 316, certificadas uso alimentario

DOCCE EROGAZIONE BRUGNETTI/AURORA
SHOWER SCREENS BRUGNETTI/AURORA
AUSLAUFDUSCHEN BRUGNETTI/AURORA
DUCHAS EROGACIÓN BRUGNETTI/AURORA

1

2

Photo	LF Code	Dimensions	Suitable for	For machine model
1	**1081026**	ø 56,5 mm	BRUGNETTI 000182	ALEXIA - C
2	**1081003**	ø 57,5 mm	BRUGNETTI	AL

DOCCE EROGAZIONE BRUGNETTI/AURORA "DI PRECISIONE"
"PRECISION" SHOWER SCREENS BRUGNETTI/AURORA
"FEINMECHANISCHE" AUSLAUFDUSCHEN BRUGNETTI/AURORA
DUCHAS EROGACIÓN BRUGNETTI/AURORA "DE PRECISIÓN"

1

2

3 - NANOQUARTZ

Photo	LF Code	Dimensions	Membrane	Suitable for	For machine model
1	**1460204**	ø 56.5 mm	200 µM	BRUGNETTI	ALEXIA - C
2	**1460209**	ø 57.5 mm	35 µM	BRUGNETTI	ALEXIA - C
3	**1081603**	ø 56.5 mm	200 µM NANOTEC	BRUGNETTI	ALEXIA - C

Docce progettate per ottenere la perfetta estrazione del caffè , acciaio Aisi 316 , certificate alimentare
Showers designed to obtain a perfect coffee brewing, Aisi 316 steel, food safe
Die Duschen wurden für die perfekte Kaffeeextraktion hergestellt,aus Aisi316 Stahl,lebensmitteltauglich-zertifiziert
Duchas planeadas para obtener la perfecta extracción del café, acero Aisi 316, certificadas uso alimentario

DOCCE EROGAZIONE CARIMALI
SHOWER SCREENS CARIMALI
AUSLAUFDUSCHEN CARIMALI
DUCHAS EROGACIÓN CARIMALI

1

2

3

4

5

Photo	LF Code	Dimensions	Suitable for	For machine model
1	**1081006**	ø 51.5 mm	CARIMALI 14.01899	ETABETAV2 - E9ESPRESSO - KIKKO - PRATICA - TEMASTYLE
2	**1081007**	ø 51.5 mm	CARIMALI 14.00976	SYSTEMA - ECO - UNO
3	**1081026**	ø 56.5 mm	CARIMALI 14.01740	CARIMALINA
4	**1081036**	ø 57.5 mm	CARIMALI 14.00362	SYSTEMA - ECO - UNO
5	**1081536**	ø 57.5 mm	CARIMALI 14.00362	SYSTEMA - ECO - UNO

DOCCE EROGAZIONE CARIMALI "DI PRECISIONE"
"PRECISION" SHOWER SCREENS CARIMALI
"FEINMECHANISCE" AUSLAUFDUSCHEN CARIMALI
DUCHAS EROGACIÓN CARIMALI "DE PRECISIÓN"

1

2

3 - NANOQUARTZ

4

5

Photo	LF Code	Dimensions	Membrane	Suitable for	For machine model
1	**1460200**	ø 51.5 mm	200 µM	CARIMALI	ETABETAV2 - E9ESPRESSO - KIKKO - PRATICA - TEMASTYLE
2	**1460205**	ø 51.5 mm	35 µM	CARIMALI	ETABETAV2 - E9ESPRESSO - KIKKO - PRATICA - TEMASTYLE
3	**1081600**	ø 51.5 mm	200 µM NANOTEC	CARIMALI	ETABETAV2 - E9ESPRESSO - KIKKO - PRATICA - TEMASTYLE
4	**1460202**	ø 56.5 mm	200 µM	CARIMALI	SYSTEMA - ECO - UNO
5	**1460207**	ø 57.5 mm	35 µM	CARIMALI	SYSTEMA - ECO - UNO

Docce progettate per ottenere la perfetta estrazione del caffè , acciaio Aisi 316 , certificate alimentare
Showers designed to obtain a perfect coffee brewing, Aisi 316 steel, food safe
Die Duschen wurden für die perfekte Kaffeeextraktion hergestellt,aus Aisi316 Stahl,lebensmitteltauglich-zertifiziert
Duchas planeadas para obtener la perfecta extracción del café, acero Aisi 316, certificadas uso alimentario

DOCCE EROGAZIONE CASADIO
SHOWER SCREENS CASADIO
AUSLAUFDUSCHEN CASADIO
DUCHAS EROGACIÓN CASADIO

1

2

3

4

5

Photo	LF Code	Dimensions	Suitable for	For machine model
1	**1081006**	ø 51.5 mm	CASADIO 457504000	VENTI
2	**1081016**	ø 60.0 mm	CASADIO 457560000	DIECI - DODICI
3	**1081116**	ø 60.0 mm	CASADIO 457560000	DIECI - DODICI
4	**1081216**	ø 60.0 mm	CASADIO 457560000	DIECI - DODICI
5	**1081516**	ø 60.0 mm	CASADIO 457560000	DIECI - DODICI

DOCCE EROGAZIONE CASADIO "DI PRECISIONE"
"PRECISION" SHOWER SCREENS CASADIO
"FEINMECHANISCHE" AUSLAUFDUSCHEN CASADIO
DUCHAS EROGACIÓN CASADIO "DE PRECISIÓN"

1

2

3 - NANOQUARTZ

4

5

6 - NANOQUARTZ

Photo	LF Code	Dimensions	Membrane	Suitable for	For machine model
1	**1460200**	ø 51.5 mm	200 µM	CASADIO	VENTI
2	**1460205**	ø 51.5 mm	35 µM	CASADIO	VENTI
3	**1081600**	ø 51.5 mm	200 µM NANOTEC	CASADIO	VENTI
4	**1460201**	ø 60.0 mm	200 µM	CASADIO	DIECI - DODICI
5	**1460206**	ø 60.0 mm	35 µM	CASADIO	DIECI - DODICI
6	**1081601**	ø 60.0 mm	200 µM NANOTEC	CASADIO	DIECI - DODICI

Docce progettate per ottenere la perfetta estrazione del caffè , acciaio Aisi 316 , certificate alimentare
Showers designed to obtain a perfect coffee brewing, Aisi 316 steel, food safe
Die Duschen wurden für die perfekte Kaffeeextraktion hergestellt,aus Aisi316 Stahl,lebensmitteltauglich-zertifiziert
Duchas planeadas para obtener la perfecta extracción del café, acero Aisi 316, certificadas uso alimentario

DOCCE EROGAZIONE CIMBALI
SHOWER SCREENS CIMBALI
AUSLAUFDUSCHEN CIMBALI
DUCHAS EROGACIÓN CIMBALI

1

2

Photo	LF Code	Dimensions	Suitable for	For machine model
1	**1081006**	ø 51.5 mm	CIMBALI 457-504-000	JUNIOR - M21 - M24 - M27 - M28 - M30 - M31 - M32 - M39
2	**1081010**	ø 53.0 mm	CIMBALI 458-093-000	M20 - M21

DOCCE EROGAZIONE CIMBALI "DI PRECISIONE"
"PRECISION" SHOWER SCREENS CIMBALI
"FEINMECHANISCHE" AUSLAUFDUSCHEN CIMBALI
DUCHAS EROGACIÓN CIMBALI "DE PRECISIÓN"

1

2

3 - NANOQUARTZ

Photo	LF Code	Dimensions	Membrane	Suitable for	For machine model
1	**1460200**	ø 51.5 mm	200 µM	CIMBALI	JUNIOR - M21 - M24 - M27 - M28 - M30 - M31 - M32 - M39
2	**1460205**	ø 51.5 mm	35 µM	CIMBALI	JUNIOR - M21 - M24 - M27 - M28 - M30 - M31 - M32 - M39
3	**1081600**	ø 51.5 mm	200 µM NANOTEC	CIMBALI	JUNIOR - M21 - M24 - M27 - M28 - M30 - M31 - M32 - M39

Docce progettate per ottenere la perfetta estrazione del caffè , acciaio Aisi 316 , certificate alimentare
Showers designed to obtain a perfect coffee brewing, Aisi 316 steel, food safe
Die Duschen wurden für die perfekte Kaffeeextraktion hergestellt,aus Aisi316 Stahl,lebensmitteltauglich-zertifiziert
Duchas planeadas para obtener la perfecta extracción del café, acero Aisi 316, certificadas uso alimentario

DOCCE EROGAZIONE CONTI
SHOWER SCREENS CONTI
AUSLAUFDUSCHEN CONTI
DUCHAS EROGACIÓN CONTI

1

2

Photo	LF Code	Dimensions	Suitable for	For machine model
1	**1081102**	ø 57.0 mm	CONTI 072200	CLASSICA
2	**1081101**	ø 58.5 mm	CONTI 355900	CLASSICA - CLUB - XEOS2 - TWINSTAR 2

DOCCE EROGAZIONE DAL TIO
SHOWER SCREENS DAL TIO
AUSLAUFDUSCHEN DAL TIO
DUCHAS EROGACIÓN DAL TIO

1 - POD ø 44 mm

Photo	LF Code	Dimensions	Suitable for	For machine model
1	**1081084**	ø 55 mm TY1	DAL TIO 04063003	FOURPODS - SMILE - DELIZIA

DOCCE EROGAZIONE DALLA CORTE
SHOWER SCREENS DALLA CORTE
AUSLAUFDUSCHEN DALLA CORTE
DUCHAS EROGACIÓN DALLA CORTE

1

Photo	LF Code	Dimensions	Suitable for	For machine model
1	**1081091**	ø 47.5 mm	DALLA CORTE B-MC-0461	---

Docce erogazione gruppo caffè
Shower screens for brew group
Auslaufduschen für Kaffeegruppen
Duchas erogación grupo café

DOCCE EROGAZIONE DALLA CORTE "DI PRECISIONE"
"PRECISION" SHOWER SCREENS DALLA CORTE
"FEINMECHANISCHE" AUSLAUFDUSCHEN DALLA CORTE
DUCHAS EROGACIÓN DALLA CORTE "DE PRECISIÓN"

1

Photo	LF Code	Dimensions	Membrane	Suitable for	For machine model
1	**1460211**	ø 48.4 mm	200 µM	DALLA CORTE	---

Docce progettate per ottenere la perfetta estrazione del caffè , acciaio Aisi 316 , certificate alimentare
Showers designed to obtain a perfect coffee brewing, Aisi 316 steel, food safe
Die Duschen wurden für die perfekte Kaffeeextraktion hergestellt,aus Aisi316 Stahl,lebensmitteltauglich-zertifiziert
Duchas planeadas para obtener la perfecta extracción del café, acero Aisi 316, certificadas uso alimentario

DOCCE EROGAZIONE DELONGHI
SHOWER SCREENS DELONGHI
AUSLAUFDUSCHEN DELONGHI
DUCHAS EROGACIÓN DELONGHI "DE PRECISIÓN"

1 2 3 4 5 6

Photo	LF Code	Dimensions	Suitable for	For machine model
1	**1081093**	ø 40.0 mm	DELONGHI 6032105300	ECAM23.210.W - ECAM26.455.C - ESAM5400 - ESAM5400EX
2	**1081109**	ø 40.0 mm	DELONGHI 6013213181	ESAM02.110.SB - ESAM04.110.B - ESAM3000.B EX:1 - ESAM5400
3	**1081094**	ø 42.3 mm	DELONGHI 6032107100	ECOV310AZ - EC155 - EC300M
4	**1081108**	ø 50,5 mm	DELONGHI 6013211191	ECI341 - ECOV311 - ECP31.21 - ECZ351 - EC680 - EC820 - EC850 - EC860
5	**1081095**	ø 42.5 mm	DELONGHI 5313217601	ECAM23.210.W - ECAM26.455.C
6	**1081092**	ø 43.0 mm	DELONGHI 5332139200	ESAM5400 - ESAM5400EX

DOCCE EROGAZIONE DIDIESSE
SHOWER SCREENS DIDIESSE
AUSLAUFDUSCHEN DIDIESSE
DUCHAS EROGACIÓN DIDIESSE

1 - POD ø 44 mm 2 - POD ø 38 mm

Photo	LF Code	Dimensions	Suitable for	For machine model
1	**1081084**	ø 55 mm TY1	DIDIESSE	---
2	**1081077**	ø 55 mm TY38	DIDIESSE	---

DOCCE EROGAZIONE ECM
SHOWER SCREENS ECM
AUSLAUFDUSCHEN ECM
DUCHAS EROGACIÓN ECM

1

2

3

4

5

Photo	LF Code	Dimensions	Suitable for	For machine model
1	**1081007**	ø 51.5 mm	ECM C519900102	RAFFAELLO
2	**1081016**	ø 60.0 mm	ECM C519900103	GIOTTO - LAURA - MICHELANGELO - VENEZIANO
3	**1081116**	ø 60.0 mm	ECM	GIOTTO - LAURA - MICHELANGELO - VENEZIANO
4	**1081216**	ø 60.0 mm	ECM	GIOTTO - LAURA - MICHELANGELO - VENEZIANO
5	**1081516**	ø 60.0 mm	ECM	GIOTTO - LAURA - MICHELANGELO - VENEZIANO

DOCCE EROGAZIONE ECM "DI PRECISIONE"
"PRECISION" SHOWER SCREENS ECM
"FEINMECHANISCHE" AUSLAUFDUSCHEN ECM
DUCHAS EROGACIÓN ECM "DE PRECISIÓN"

1

2

3 - NANOQUARTZ

4

5

6 - NANOQUARTZ

Photo	LF Code	Dimensions	Membrane	Suitable for	For machine model
1	**1460200**	ø 51.5 mm	200 µM	ECM	RAFFAELLO
2	**1460205**	ø 51.5 mm	35 µM	ECM	RAFFAELLO
3	**1081600**	ø 51.5 mm	200 µM NANOTEC	ECM	RAFFAELLO
4	**1460201**	ø 60.0 mm	200 µM	ECM	GIOTTO - LAURA - MICHELANGELO - VENEZIANO
5	**1460206**	ø 60.0 mm	35 µM	ECM	GIOTTO - LAURA - MICHELANGELO - VENEZIANO
6	**1081601**	ø 60.0 mm	200 µM NANOTEC	ECM	GIOTTO - LAURA - MICHELANGELO - VENEZIANO

Docce progettate per ottenere la perfetta estrazione del caffè , acciaio Aisi 316 , certificate alimentare
Showers designed to obtain a perfect coffee brewing, Aisi 316 steel, food safe
Die Duschen wurden für die perfekte Kaffeeextraktion hergestellt,aus Aisi316 Stahl,lebensmitteltauglich-zertifiziert
Duchas planeadas para obtener la perfecta extracción del café, acero Aisi 316, certificadas uso alimentario

DOCCE EROGAZIONE ECM MANUFACTURE
SHOWER SCREENS ECM MANUFACTURE
AUSLAUFDUSCHEN ECM MANUFACTURE
DUCHAS EROGACIÓN ECM MANUFACTURE

1

2

3

4

Photo	LF Code	Dimensions	Suitable for	For machine model
1	**1081016**	ø 60.0 mm	ECM MANUFACTURE C519900103	CLASSIKA II - ELEKTRONIKA II PROFI - MECHANIKA
2	**1081116**	ø 60.0 mm	ECM MANUFACTURE	CLASSIKA II - ELEKTRONIKA II PROFI - MECHANIKA
3	**1081216**	ø 60.0 mm	ECM MANUFACTURE	CLASSIKA II - ELEKTRONIKA II PROFI - MECHANIKA
4	**1081516**	ø 60.0 mm	ECM MANUFACTURE	CLASSIKA II - ELEKTRONIKA II PROFI - MECHANIKA

DOCCE EROGAZIONE ECM MANUFACTURE "DI PRECISIONE"
PRECISION SHOWER SCREENS ECM MANUFACTURE
PRÄZISIONSDUSCHEN ECM MANUFACTURE
DUCHAS EROGACIÓN DE PRECISIÓN ECM MANUFACTURE

1

2

3 - NANOQUARTZ

Photo	LF Code	Dimensions	Membrane	Suitable for	For machine model
1	**1460201**	ø 60.0 mm	200 µM	ECM MANUFACTURE	CLASSIKA II - ELEKTRONIKA II PROFI - MECHANIKA
2	**1460206**	ø 60.0 mm	35 µM	ECM MANUFACTURE	CLASSIKA II - ELEKTRONIKA II PROFI - MECHANIKA
3	**1081601**	ø 60.0 mm	200 µM NANOTEC	ECM MANUFACTURE	CLASSIKA II - ELEKTRONIKA II PROFI - MECHANIKA

Docce progettate per ottenere la perfetta estrazione del caffè , acciaio Aisi 316 , certificate alimentare
Showers designed to obtain a perfect coffee brewing, Aisi 316 steel, food safe
Die Duschen wurden für die perfekte Kaffeeextraktion hergestellt,aus Aisi316 Stahl,lebensmitteltauglich-zertifiziert
Duchas planeadas para obtener la perfecta extracción del café, acero Aisi 316, certificadas uso alimentario

DOCCE EROGAZIONE ELEKTRA
SHOWER SCREENS ELEKTRA
AUSLAUFDUSCHEN ELEKTRA
DUCHAS EROGACIÓN ELEKTRA

1

2

3

4

Photo	LF Code	Dimensions	Suitable for	For machine model
1	**1081006**	ø 51.5 mm	ELEKTRA 01208035	MODERN - SIXTIES - CLASSIC - KAPPA - MICROCASA
2	**1081007**	ø 51.5 mm	ELEKTRA 01208035	MODERN - SIXTIES - CLASSIC - KAPPA - MICROCASA
3	**1081002**	ø 51.5 mm	ELEKTRA 02654035	MINIVERTICALE
4	**1081013**	ø 52.0 mm	ELEKTRA 00175035	MICROCASA

DOCCE EROGAZIONE ELEKTRA "DI PRECISIONE"
"PRECISION" SHOWER SCREENS ELEKTRA
"FEINMECHANISCHE" AUSLAUFDUSCHEN ELEKTRA
DUCHAS EROGACIÓN ELEKTRA "DE PRECISIÓN"

1

2

3 - NANOQUARTZ

Photo	LF Code	Dimensions	Membrane	Suitable for	For machine model
1	**1460200**	ø 51.5 mm	200 µM	ELEKTRA	MODERN - SIXTIES - CLASSIC - KAPPA - MICROCASA
2	**1460205**	ø 51.5 mm	35 µM	ELEKTRA	MODERN - SIXTIES - CLASSIC - KAPPA - MICROCASA
3	**1081600**	ø 51.5 mm	200 µM NANOTEC	ELEKTRA	MODERN - SIXTIES - CLASSIC - KAPPA - MICROCASA

Docce progettate per ottenere la perfetta estrazione del caffè , acciaio Aisi 316 , certificate alimentare
Showers designed to obtain a perfect coffee brewing, Aisi 316 steel, food safe
Die Duschen wurden für die perfekte Kaffeeextraktion hergestellt,aus Aisi316 Stahl,lebensmitteltauglich-zertifiziert
Duchas planeadas para obtener la perfecta extracción del café, acero Aisi 316, certificadas uso alimentario

DOCCE EROGAZIONE EXPOBAR
SHOWER SCREENS EXPOBAR
AUSLAUFDUSCHEN EXPOBAR
DUCHAS EROGACIÓN EXPOBAR

1

2

3

4

5

Photo	LF Code	Dimensions	Suitable for	For machine model
1	**1081008**	ø 34.0 mm	EXPOBAR 75000015	POD SYSTEM
2	**1081016**	ø 60.0 mm	EXPOBAR 75000010	DIAMANT - EB61 - G10 - MARKUS - MONROC - NEW ELEGANCE
3	**1081116**	ø 60.0 mm	EXPOBAR 75000010	DIAMANT - EB61 - G10 - MARKUS - MONROC - NEW ELEGANCE
4	**1081216**	ø 60.0 mm	EXPOBAR 75000010	DIAMANT - EB61 - G10 - MARKUS - MONROC - NEW ELEGANCE
5	**1081516**	ø 60.0 mm	EXPOBAR 75000010	DIAMANT - EB61 - G10 - MARKUS - MONROC - NEW ELEGANCE

DOCCE EROGAZIONE EXPOBAR "DI PRECISIONE"
"PRECISION" SHOWER SCREENS EXPOBAR
"FEINMECHANISCHE" AUSLAUFDUSCHEN EXPOBAR
DUCHAS EROGACIÓN EXPOBAR "DE PRECISIÓN"

1

2

3 - NANOQUARTZ

Photo	LF Code	Dimensions	Membrane	Suitable for	For machine model
1	**1460201**	ø 60.0 mm	200 µM	EXPOBAR	DIAMANT - EB61 - G10 - MARKUS - MONROC - NEW ELEGANCE
2	**1460206**	ø 60.0 mm	35 µM	EXPOBAR	DIAMANT - EB61 - G10 - MARKUS - MONROC - NEW ELEGANCE
3	**1081601**	ø 60.0 mm	200 µM NANOTEC	EXPOBAR	DIAMANT - EB61 - G10 - MARKUS - MONROC - NEW ELEGANCE

Docce progettate per ottenere la perfetta estrazione del caffè , acciaio Aisi 316 , certificate alimentare
Showers designed to obtain a perfect coffee brewing, Aisi 316 steel, food safe
Die Duschen wurden für die perfekte Kaffeeextraktion hergestellt,aus Aisi316 Stahl,lebensmitteltauglich-zertifiziert
Duchas planeadas para obtener la perfecta extracción del café, acero Aisi 316, certificadas uso alimentario

Docce erogazione gruppo caffè
Shower screens for brew group
Auslaufduschen für Kaffeegruppen
Duchas erogación grupo café

DOCCE EROGAZIONE FAEMA
SHOWER SCREENS FAEMA
AUSLAUFDUSCHEN FAEMA
DUCHAS EROGACIÓN FAEMA

1

2

3

Photo	LF Code	Dimensions	Suitable for	For machine model
1	**1081006**	ø 51.5 mm	FAEMA 457504000	COMPACT - DUE - EXPRESS - E91 - E98COMPACT - SPECIAL
2	**1081007**	ø 51.5 mm	FAEMA 4771132004	COMPACT - DUE - EXPRESS - E91 - E98COMPACT - SPECIAL
3	**1081010**	ø 53.0 mm	FAEMA 458093000	E98LEVA

DOCCE EROGAZIONE FAEMA
SHOWER SCREENS FAEMA
AUSLAUFDUSCHEN FAEMA
DUCHAS EROGACIÓN FAEMA

1

2

3

4

5

Photo	LF Code	Dimensions	Suitable for	For machine model
1	**1081016**	ø 60.0 mm	FAEMA 457560000	COMPACT - DUE - EMBLEMA - ENOVA - EXPRESS - E61 - E91
2	**1081116**	ø 60.0 mm	FAEMA 457560000	COMPACT - DUE - EMBLEMA - ENOVA - EXPRESS - E61 - E91
3	**1081216**	ø 60.0 mm	FAEMA 457560000	COMPACT - DUE - EMBLEMA - ENOVA - EXPRESS - E61 - E91
4	**1081516**	ø 60.0 mm	FAEMA 457560000	COMPACT - DUE - EMBLEMA - ENOVA - EXPRESS - E61 - E91
5	**1081100**	ø 60.0 mm	FAEMA	E61 - E61JUBILE

DOCCE EROGAZIONE FAEMA "DI PRECISIONE"
PRECISION SHOWER SCREENS FAEMA
PRÄZISIONSDUSCHEN FAEMA
DUCHAS EROGACIÓN DE PRECISIÓN FAEMA

1

2

3 - NANOQUARTZ

4

5

6 - NANOQUARTZ

Photo	LF Code	Dimensions	Membrane	Suitable for	For machine model
1	**1460200**	ø 51.5 mm	200 µM	FAEMA	COMPACT - DUE - EXPRESS - E91 - E98COMPACT - SPECIAL
2	**1460205**	ø 51.5 mm	35 µM	FAEMA	COMPACT - DUE - EXPRESS - E91 - E98COMPACT - SPECIAL
3	**1081600**	ø 51.5 mm	200 µM NANOTEC	FAEMA	COMPACT - DUE - EXPRESS - E91 - E98COMPACT - SPECIAL
4	**1460201**	ø 60.0 mm	200 µM	FAEMA	COMPACT - DUE - EMBLEMA - ENOVA - EXPRESS - E61 - E91
5	**1460206**	ø 60.0 mm	35 µM	FAEMA	COMPACT - DUE - EMBLEMA - ENOVA - EXPRESS - E61 - E91
6	**1081601**	ø 60.0 mm	200 µM NANOTEC	FAEMA	COMPACT - DUE - EMBLEMA - ENOVA - EXPRESS - E61 - E91

Docce progettate per ottenere la perfetta estrazione del caffè , acciaio Aisi 316 , certificate alimentare
Showers designed to obtain a perfect coffee brewing, Aisi 316 steel, food safe
Die Duschen wurden für die perfekte Kaffeeextraktion hergestellt,aus Aisi316 Stahl,lebensmitteltauglich-zertifiziert
Duchas planeadas para obtener la perfecta extracción del café, acero Aisi 316, certificadas uso alimentario

DOCCE EROGAZIONE FAIMAC
SHOWER SCREENS FAIMAC
AUSLAUFDUSCHEN FAIMAC
DUCHAS EROGACIÓN FAIMAC

1

2

3

4

Photo	LF Code	Dimensions	Suitable for	For machine model
1	**1081016**	ø 60.0 mm	FAIMAC DOC001	---
2	**1081116**	ø 60.0 mm	FAIMAC DOC001	---
3	**1081216**	ø 60.0 mm	FAIMAC DOC001	---
4	**1081516**	ø 60.0 mm	FAIMAC DOC001	---

DOCCE EROGAZIONE FAIMAC "DI PRECISIONE"
"PRECISION" SHOWER SCREENS FAIMAC
"FEINMECHANISCHE" AUSLAUFDUSCHEN FAIMAC
DUCHAS EROGACIÓN FAIMAC "DE PRECISIÓN"

1

2

3 - NANOQUARTZ

Photo	LF Code	Dimensions	Membrane	Suitable for	For machine model
1	**1460201**	ø 60.0 mm	200 µM	FAIMAC	---
2	**1460206**	ø 60.0 mm	35 µM	FAIMAC	---
3	**1081601**	ø 60.0 mm	200 µM NANOTEC	FAIMAC	---

Docce progettate per ottenere la perfetta estrazione del caffè , acciaio Aisi 316 , certificate alimentare
Showers designed to obtain a perfect coffee brewing, Aisi 316 steel, food safe
Die Duschen wurden für die perfekte Kaffeeextraktion hergestellt,aus Aisi316 Stahl,lebensmitteltauglich-zertifiziert
Duchas planeadas para obtener la perfecta extracción del café, acero Aisi 316, certificadas uso alimentario

DOCCE EROGAZIONE FIAMMA RST
SHOWER SCREENS FIAMMA RST
AUSLAUFDUSCHEN FIAMMA RST
DUCHAS EROGACIÓN FIAMMA RST

1

2

3

4

Photo	LF Code	Dimensions	Suitable for	For machine model
1	**1081016**	ø 60.0 mm	FIAMMA 5.0.025.0010	ATLANTIC - MARINA - PRESTIGE
2	**1081116**	ø 60.0 mm	FIAMMA 5.0.025.0010	ATLANTIC - MARINA - PRESTIGE
3	**1081216**	ø 60.0 mm	FIAMMA 5.0.025.0010	ATLANTIC - MARINA - PRESTIGE
4	**1081516**	ø 60.0 mm	FIAMMA 5.0.025.0010	ATLANTIC - MARINA - PRESTIGE

Docce erogazione gruppo caffè
Shower screens for brew group
Auslaufduschen für Kaffeegruppen
Duchas erogación grupo café

DOCCE EROGAZIONE FIAMMA RST "DI PRECISIONE"
"PRECISION" SHOWER SCREENS FIAMMA RST
"FEINMECHANISCHE" AUSLAUFDUSCHEN FIAMMA RST
DUCHAS EROGACIÓN FIAMMA RST "DE PRECISIÓN"

1

2

3 - NANOQUARTZ

Photo	LF Code	Dimensions	Membrane	Suitable for	For machine model
1	**1460201**	ø 60.0 mm	200 µM	FIAMMA	ATLANTIC - MARINA - PRESTIGE
2	**1460206**	ø 60.0 mm	35 µM	FIAMMA	ATLANTIC - MARINA - PRESTIGE
3	**1081601**	ø 60.0 mm	200 µM NANOTEC	FIAMMA	ATLANTIC - MARINA - PRESTIGE

Docce progettate per ottenere la perfetta estrazione del caffè , acciaio Aisi 316 , certificate alimentare
Showers designed to obtain a perfect coffee brewing, Aisi 316 steel, food safe
Die Duschen wurden für die perfekte Kaffeeextraktion hergestellt,aus Aisi316 Stahl,lebensmitteltauglich-zertifiziert
Duchas planeadas para obtener la perfecta extracción del café, acero Aisi 316, certificadas uso alimentario

DOCCE EROGAZIONE FIORENZATO CS
SHOWER SCREENS FIORENZATO CS
AUSLAUFDUSCHEN FIORENZATO CS
DUCHAS EROGACIÓN FIORENZATO CS

1

2

3

4

5

6

Photo	LF Code	Dimensions	Suitable for	For machine model
1	**1081007**	ø 51.5 mm	FIORENZATO CS A2200235	VENEZIA
2	**1081003**	ø 57.5 mm	FIORENZATO CS A2200241	PIAZZASANMARCO
3	**1081016**	ø 60.0 mm	FIORENZATO CS A2200031	BRICOLETTA - COLOMBINA - DUCALE - FENICE - LIDO
4	**1081116**	ø 60.0 mm	FIORENZATO CS A2200031	BRICOLETTA - COLOMBINA - DUCALE - FENICE - LIDO
5	**1081216**	ø 60.0 mm	FIORENZATO CS A2200031	BRICOLETTA - COLOMBINA - DUCALE - FENICE - LIDO
6	**1081516**	ø 60.0 mm	FIORENZATO CS A2200031	BRICOLETTA - COLOMBINA - DUCALE - FENICE - LIDO

DOCCE EROGAZIONE FIORENZATO CS "DI PRECISIONE"
"PRECISION" SHOWER SCREENS FIORENZATO CS
"FEINMECHANISCHE" AUSLAUFDUSCHEN FIORENZATO CS
DUCHAS EROGACIÓN FIORENZATO CS "DE PRECISIÓN"

1

2

3 - NANOQUARTZ

4

5

6 - NANOQUARTZ

Photo	LF Code	Dimensions	Membrane	Suitable for	For machine model
1	**1460200**	ø 51.5 mm	200 µM	FIORENZATO CS	VENEZIA
2	**1460205**	ø 51.5 mm	35 µM	FIORENZATO CS	VENEZIA
3	**1081600**	ø 51.5 mm	200 µM NANOTEC	FIORENZATO CS	VENEZIA
4	**1460201**	ø 60.0 mm	200 µM	FIORENZATO CS	BRICOLETTA - COLOMBINA - DUCALE - FENICE - LIDO
5	**1460206**	ø 60.0 mm	35 µM	FIORENZATO CS	BRICOLETTA - COLOMBINA - DUCALE - FENICE - LIDO
6	**1081601**	ø 60.0 mm	200 µM NANOTEC	FIORENZATO CS	BRICOLETTA - COLOMBINA - DUCALE - FENICE - LIDO

Docce progettate per ottenere la perfetta estrazione del caffè , acciaio Aisi 316 , certificate alimentare
Showers designed to obtain a perfect coffee brewing, Aisi 316 steel, food safe
Die Duschen wurden für die perfekte Kaffeeextraktion hergestellt,aus Aisi316 Stahl,lebensmitteltauglich-zertifiziert
Duchas planeadas para obtener la perfecta extracción del café, acero Aisi 316, certificadas uso alimentario

DOCCE EROGAZIONE FRACINO
SHOWER SCREENS FRACINO
AUSLAUFDUSCHEN FRACINO
DUCHAS EROGACIÓN FRACINO

1

Photo	LF Code	Dimensions	Suitable for	For machine model
1	**1081007**	ø 51.5 mm	FRACINO FC103M	BAMBINO - CHERUB - HEAVENLY

DOCCE EROGAZIONE FRACINO "DI PRECISIONE"
PRECISION SHOWER SCREENS FRACINO
PRÄZISIONSDUSCHEN FRACINO
DUCHAS EROGACIÓN DE PRECISIÓN FRACINO

1

2

3 - NANOQUARTZ

Photo	LF Code	Dimensions	Membrane	Suitable for	For machine model
1	**1460200**	ø 51.5 mm	200 µM	FRACINO	BAMBINO - CHERUB - HEAVENLY
2	**1460205**	ø 51.5 mm	35 µM	FRACINO	BAMBINO - CHERUB - HEAVENLY
3	**1081600**	ø 51.5 mm	200 µM NANOTEC	FRACINO	BAMBINO - CHERUB - HEAVENLY

Docce progettate per ottenere la perfetta estrazione del caffè , acciaio Aisi 316 , certificate alimentare
Showers designed to obtain a perfect coffee brewing, Aisi 316 steel, food safe
Die Duschen wurden für die perfekte Kaffeeextraktion hergestellt,aus Aisi316 Stahl,lebensmitteltauglich-zertifiziert
Duchas planeadas para obtener la perfecta extracción del café, acero Aisi 316, certificadas uso alimentario

DOCCE EROGAZIONE FUTURA
SHOWER SCREENS FUTURA
AUSLAUFDUSCHEN FUTURA
DUCHAS EROGACIÓN FUTURA

1

2

3

4

Photo	LF Code	Dimensions	Suitable for	For machine model
1	**1081016**	ø 60.0 mm	FUTURA 200088	F100
2	**1081116**	ø 60.0 mm	FUTURA 200088	F100
3	**1081216**	ø 60.0 mm	FUTURA 200088	F100
4	**1081516**	ø 60.0 mm	FUTURA 200088	F100

Docce erogazione gruppo caffè
Shower screens for brew group
Auslaufduschen für Kaffeegruppen
Duchas erogación grupo café

DOCCE EROGAZIONE FUTURMAT
SHOWER SCREENS FUTURMAT
AUSLAUFDUSCHEN FUTURMAT
DUCHAS EROGACIÓN FUTURMAT

1

2

3

4

5

Photo	LF Code	Dimensions	Suitable for	For machine model
1	**1081250**	ø 57.0 mm	FUTURMAT 01602002	PALANCA
2	**1081016**	ø 60.0 mm	FUTURMAT 02610004	CUSTOM - E61 - F3 - RIMINI
3	**1081116**	ø 60.0 mm	FUTURMAT 02610004	CUSTOM - E61 - F3 - RIMINI
4	**1081216**	ø 60.0 mm	FUTURMAT 02610004	CUSTOM - E61 - F3 - RIMINI
5	**1081516**	ø 60.0 mm	FUTURMAT 02610004	CUSTOM - E61 - F3 - RIMINI

DOCCE EROGAZIONE FUTURMAT "DI PRECISIONE"
"PRECISION" SHOWER SCREENS FUTURMAT
"FEINMECHANISCHE" AUSLAUFDUSCHEN FUTURMAT
DUCHAS EROGACIÓN FUTURMAT "DE PRECISIÓN"

1

2

3 - NANOQUARTZ

Photo	LF Code	Dimensions	Membrane	Suitable for	For machine model
1	**1460201**	ø 60.0 mm	200 µM	FUTURMAT	CUSTOM - E61 - F3 - RIMINI
2	**1460206**	ø 60.0 mm	35 µM	FUTURMAT	CUSTOM - E61 - F3 - RIMINI
3	**1081601**	ø 60.0 mm	200 µM NANOTEC	FUTURMAT	CUSTOM - E61 - F3 - RIMINI

Docce progettate per ottenere la perfetta estrazione del caffè , acciaio Aisi 316 , certificate alimentare
Showers designed to obtain a perfect coffee brewing, Aisi 316 steel, food safe
Die Duschen wurden für die perfekte Kaffeeextraktion hergestellt,aus Aisi316 Stahl,lebensmitteltauglich-zertifiziert
Duchas planeadas para obtener la perfecta extracción del café, acero Aisi 316, certificadas uso alimentario

DOCCE EROGAZIONE GAGGIA
SHOWER SCREENS GAGGIA
AUSLAUFDUSCHEN GAGGIA
DUCHAS EROGACIÓN GAGGIA

1

2

3

4

Photo	LF Code	Dimensions	Suitable for	For machine model
1	**1081021**	ø 55.0 mm	GAGGIA WGADM0269	DECO - D90 - E90 - GD - GE - LCD - TS - XD - XE
2	**1081063**	ø 54.5 mm	GAGGIA DM0704	BABY - CAREZZA - CLASSIC - EVOLUTION - NEWBABY
3	**1081022**	ø 51.5 mm	GAGGIA	BABY - NEWBABY
4	**1081112**	ø 49,5 mm	GAGGIA 11001471	NEW ESPRESSO 06 DOSE

DOCCE EROGAZIONE GAGGIA
SHOWER SCREENS GAGGIA
AUSLAUFDUSCHEN GAGGIA
DUCHAS EROGACIÓN GAGGIA

1

2

3

4

5

Photo	LF Code	Dimensions	Suitable for	For machine model
1	**5047532**	ø 35,8 mm	GAGGIA 20000400	SYNCRONY
2	**5066398**	ø 35,8 mm	GAGGIA 11009162	TITANIUM
3	**5070066**	ø 35,8 mm	GAGGIA 9161.268	ACCADEMIA
4	**1081058**	ø 49.0 mm	GAGGIA 123741421	CAREZZA - GRANGAGGIA
5	**1081020**	ø 54.0 mm	GAGGIA S327115	G105 - G106

DOCCE EROGAZIONE GAGGIA "DI PRECISIONE"
PRECISION SHOWER SCREENS GAGGIA
PRÄZISIONSDUSCHEN GAGGIA
DUCHAS EROGACIÓN DE PRECISIÓN GAGGIA

1

2

Photo	LF Code	Dimensions	Membrane	Suitable for	For machine model
1	**1081103**	ø 55 mm	200 µM	GAGGIA	DECO - D90 - E90 - GD - GE - LCD - TS - XD - XE
2	**1081099**	ø 55 mm	35 µM	GAGGIA	DECO - D90 - E90 - GD - GE - LCD - TS - XD - XE

Docce progettate per ottenere la perfetta estrazione del caffè , acciaio Aisi 316 , certificate alimentare
Showers designed to obtain a perfect coffee brewing, Aisi 316 steel, food safe
Die Duschen wurden für die perfekte Kaffeeextraktion hergestellt,aus Aisi316 Stahl,lebensmitteltauglich-zertifiziert
Duchas planeadas para obtener la perfecta extracción del café, acero Aisi 316, certificadas uso alimentario

DOCCE EROGAZIONE GAGGIA SPAGNA
SHOWER SCREENS GAGGIA SPAGNA
AUSLAUFDUSCHEN GAGGIA SPAGNA
DUCHAS EROGACIÓN GAGGIA SPAGNA

1

2

3

4

Photo	LF Code	Dimensions	Suitable for	For machine model
1	**1081016**	ø 60.0 mm	GAGGIA SPAGNA 02610004	BELLA - G6 - KB - NERA
2	**1081116**	ø 60.0 mm	GAGGIA SPAGNA 02610004	BELLA - G6 - KB - NERA
3	**1081216**	ø 60.0 mm	GAGGIA SPAGNA 02610004	BELLA - G6 - KB - NERA
4	**1081516**	ø 60.0 mm	GAGGIA SPAGNA 02610004	BELLA - G6 - KB - NERA

DOCCE EROGAZIONE GAGGIA SPAGNA "DI PRECISIONE"
"PRECISION" SHOWER SCREENS GAGGIA SPAGNA
"FEINMECHANISCHE" AUSLAUFDUSCHEN GAGGIA SPAGNA
DUCHAS EROGACIÓN GAGGIA SPAGNA "DE PRECISIÓN"

1

2

3 - NANOQUARTZ

Photo	LF Code	Dimensions	Membrane	Suitable for	For machine model
1	**1460201**	ø 60.0 mm	200 µM	GAGGIA SPAGNA	BELLA - G6 - KB - NERA
2	**1460206**	ø 60.0 mm	35 µM	GAGGIA SPAGNA	BELLA - G6 - KB - NERA
3	**1081601**	ø 60.0 mm	200 µM NANOTEC	GAGGIA SPAGNA	BELLA - G6 - KB - NERA

Docce progettate per ottenere la perfetta estrazione del caffè , acciaio Aisi 316 , certificate alimentare
Showers designed to obtain a perfect coffee brewing, Aisi 316 steel, food safe
Die Duschen wurden für die perfekte Kaffeeextraktion hergestellt,aus Aisi316 Stahl,lebensmitteltauglich-zertifiziert
Duchas planeadas para obtener la perfecta extracción del café, acero Aisi 316, certificadas uso alimentario

DOCCE EROGAZIONE GRIMAC
SHOWER SCREENS GRIMAC
AUSLAUFDUSCHEN GRIMAC
DUCHAS EROGACIÓN GRIMAC

1

2

3

4

5

Photo	LF Code	Dimensions	Suitable for	For machine model
1	**1081007**	ø 51.5 mm	GRIMAC A2200235	G11
2	**1081016**	ø 60.0 mm	GRIMAC 1070100007-GR761	ECLISSE - G10 - MIA - TEN - TWENTY - ZOLAI - ZOLAII
3	**1081116**	ø 60.0 mm	GRIMAC 1070100007-GR761	ECLISSE - G10 - MIA - TEN - TWENTY - ZOLAI - ZOLAII
4	**1081216**	ø 60.0 mm	GRIMAC 1070100007-GR761	ECLISSE - G10 - MIA - TEN - TWENTY - ZOLAI - ZOLAII
5	**1081516**	ø 60.0 mm	GRIMAC 1070100007-GR761	ECLISSE - G10 - MIA - TEN - TWENTY - ZOLAI - ZOLAII

DOCCE EROGAZIONE GRIMAC "CIALDA"
"POD" SHOWER SCREENS GRIMAC
AUSLAUFDUSCHEN GRIMAC "PAD"
DUCHAS EROGACIÓN GRIMAC "CÁPSULA"

1 - POD ø 44 mm

2 - POD ø 44 mm

3 - POD ø 44 mm

4 - POD ø 44 mm

5 - POD ø 38 mm

6 - POD ø 44 mm

Photo	LF Code	Dimensions	Suitable for	For machine model
1	**1081067**	ø 55 mm TY0 253	GRIMAC 1090600007-MG039/3	AMBRA - DADAVAPORDOUBLE - NUVOLA - OPALE - TERRY
2	**1081043**	ø 55 mm TY1 277	GRIMAC 1090600004-MG039	AMBRA - DADAVAPORDOUBLE - NUVOLA - OPALE - TERRY
3	**1081068**	ø 55 mm TY2 349	GRIMAC 1090600005-MG039/1	AMBRA - DADAVAPORDOUBLE - NUVOLA - OPALE - TERRY
4	**1081069**	ø 55 mm TY3 400	GRIMAC 1090600006-MG039/2	AMBRA - DADAVAPORDOUBLE - NUVOLA - OPALE - TERRY
5	**1081070**	ø 55 mm TY4 277	GRIMAC 1070100013-MG026	AMBRA - DADAVAPORDOUBLE - NUVOLA - OPALE - TERRY
6	**1081076**	ø 55 mm TYA 177	GRIMAC 1090600017	AMBRA - DADAVAPORDOUBLE - NUVOLA - OPALE - TERRY

DOCCE EROGAZIONE GRIMAC "DI PRECISIONE"
"PRECISION" SHOWER SCREENS GRIMAC
"FEINMECHANISCHE" AUSLAUFDUSCHEN GRIMAC
DUCHAS EROGACIÓN GRIMAC "DE PRECISIÓN"

1

2

3 - NANOQUARTZ

4

5

6 - NANOQUARTZ

Photo	LF Code	Dimensions	Membrane	Suitable for	For machine model
1	**1460200**	ø 51.5 mm	200 µM	GRIMAC	G11
2	**1460205**	ø 51.5 mm	35 µM	GRIMAC	G11
3	**1081600**	ø 51.5 mm	200 µM NANOTEC	GRIMAC	G11
4	**1460201**	ø 60.0 mm	200 µM	GRIMAC	ECLISSE - G10 - MIA - TEN - TWENTY - ZOLAI - ZOLAII
5	**1460206**	ø 60.0 mm	35 µM	GRIMAC	ECLISSE - G10 - MIA - TEN - TWENTY - ZOLAI - ZOLAII
6	**1081601**	ø 60.0 mm	200 µM NANOTEC	GRIMAC	ECLISSE - G10 - MIA - TEN - TWENTY - ZOLAI - ZOLAII

Docce progettate per ottenere la perfetta estrazione del caffè , acciaio Aisi 316 , certificate alimentare
Showers designed to obtain a perfect coffee brewing, Aisi 316 steel, food safe
Die Duschen wurden für die perfekte Kaffeeextraktion hergestellt,aus Aisi316 Stahl,lebensmitteltauglich-zertifiziert
Duchas planeadas para obtener la perfecta extracción del café, acero Aisi 316, certificadas uso alimentario

DOCCE EROGAZIONE ISOMAC
SHOWER SCREENS ISOMAC
AUSLAUFDUSCHEN ISOMAC
DUCHAS EROGACIÓN ISOMAC

1

2

3

4

5

6

Photo	LF Code	Dimensions	Suitable for	For machine model
1	**1081022**	ø 51.5 mm	ISOMAC IS000806	MAVERICK
2	**1081105**	ø 52.0 mm	ISOMAC ISD001.8	VENUS
3	**1081016**	ø 60.0 mm	ISOMAC IS000412	MILLENNIUM - MONDIALE - TEA - ZAFFIRO
4	**1081116**	ø 60.0 mm	ISOMAC IS000412	MILLENNIUM - MONDIALE - TEA - ZAFFIRO
5	**1081216**	ø 60.0 mm	ISOMAC IS000412	MILLENNIUM - MONDIALE - TEA - ZAFFIRO
6	**1081516**	ø 60.0 mm	ISOMAC IS000412	MILLENNIUM - MONDIALE - TEA - ZAFFIRO

DOCCE EROGAZIONE ITALCREM
SHOWER SCREENS ITALCREM
AUSLAUFDUSCHEN ITALCREM
DUCHAS EROGACIÓN ITALCREM

1

2

3

4

5

Photo	LF Code	Dimensions	Suitable for	For machine model
1	**1081250**	ø 57.0 mm	ITALCREM 01602002	PALANCA
2	**1081016**	ø 60.0 mm	ITALCREM 02610004	CAPRI - IT4
3	**1081116**	ø 60.0 mm	ITALCREM 02610004	CAPRI - IT4
4	**1081216**	ø 60.0 mm	ITALCREM 02610004	CAPRI - IT4
5	**1081516**	ø 60.0 mm	ITALCREM 02610004	CAPRI - IT4

DOCCE EROGAZIONE ITALCREM "DI PRECISIONE"
"PRECISION" SHOWER SCREENS ITALCREM
"FEINMECHANISCHE" AUSLAUFDUSCHEN ITALCREM
DUCHAS EROGACIÓN ITALCREM "DE PRECISIÓN"

1

2

3 - NANOQUARTZ

Photo	LF Code	Dimensions	Membrane	Suitable for	For machine model
1	**1460201**	ø 60.0 mm	200 µM	ITALCREM	CAPRI - IT4
2	**1460206**	ø 60.0 mm	35 µM	ITALCREM	CAPRI - IT4
3	**1081601**	ø 60.0 mm	200 µM NANOTEC	ITALCREM	CAPRI - IT4

Docce progettate per ottenere la perfetta estrazione del caffè , acciaio Aisi 316 , certificate alimentare
Showers designed to obtain a perfect coffee brewing, Aisi 316 steel, food safe
Die Duschen wurden für die perfekte Kaffeeextraktion hergestellt,aus Aisi316 Stahl,lebensmitteltauglich-zertifiziert
Duchas planeadas para obtener la perfecta extracción del café, acero Aisi 316, certificadas uso alimentario

DOCCE EROGAZIONE LA PICCOLA
SHOWER SCREENS LA PICCOLA
AUSLAUFDUSCHEN LA PICCOLA
DUCHAS EROGACIÓN LA PICCOLA

1 - POD ø 44 mm

2 - POD ø 44 mm

Photo	LF Code	Dimensions	Suitable for	For machine model
1	**1081081**	ø 55 mm TY1	LA PICCOLA M14A	---
2	**1081078**	ø 55 mm TY2	LA PICCOLA M14B	---

DOCCE EROGAZIONE MAGISTER
SHOWER SCREENS MAGISTER
AUSLAUFDUSCHEN MAGISTER
DUCHAS EROGACIÓN MAGISTER

1

2

Photo	LF Code	Dimensions	Suitable for	For machine model
1	**1081036**	ø 57.5 mm	MAGISTER 210025	---
2	**1081536**	ø 57.5 mm	MAGISTER 210025	---

DOCCE EROGAZIONE MAGISTER "DI PRECISIONE"
"PRECISION" SHOWER SCREENS MAGISTER
"FEINMECHANISCHE" AUSLAUFDUSCHEN MAGISTER
DUCHAS EROGACIÓN MAGISTER "DE PRECISIÓN"

1

2

3 - NANOQUARTZ

Photo	LF Code	Dimensions	Membrane	Suitable for	For machine model
1	**1460203**	ø 57.0 mm	200 µM	MAGISTER	---
2	**1460208**	ø 57.0 mm	35 µM	MAGISTER	---
3	**1081602**	ø 57.0 mm	200 µM NANOTEC	MAGISTER	---

Docce progettate per ottenere la perfetta estrazione del caffè , acciaio Aisi 316 , certificate alimentare
Showers designed to obtain a perfect coffee brewing, Aisi 316 steel, food safe
Die Duschen wurden für die perfekte Kaffeeextraktion hergestellt,aus Aisi316 Stahl,lebensmitteltauglich-zertifiziert
Duchas planeadas para obtener la perfecta extracción del café, acero Aisi 316, certificadas uso alimentario

DOCCE EROGAZIONE MAIRALI
SHOWER SCREENS MAIRALI
AUSLAUFDUSCHEN MAIRALI
DUCHAS EROGACIÓN MAIRALI

1

2

3

4

5

Photo	LF Code	Dimensions	Suitable for	For machine model
1	**1081250**	ø 57.0 mm	MAIRALI 01602002	PALANCA
2	**1081016**	ø 60.0 mm	MAIRALI 02610004	ARIANNE - GIULIETTA
3	**1081116**	ø 60.0 mm	MAIRALI 02610004	ARIANNE - GIULIETTA
4	**1081216**	ø 60.0 mm	MAIRALI 02610004	ARIANNE - GIULIETTA
5	**1081516**	ø 60.0 mm	MAIRALI 02610004	ARIANNE - GIULIETTA

Docce erogazione gruppo caffè
Shower screens for brew group
Auslaufduschen für Kaffeegruppen
Duchas erogación grupo café

DOCCE EROGAZIONE MAIRALI "DI PRECISIONE"
"PRECISION" SHOWER SCREENS MAIRALI
"FEINMECHANISCHE" AUSLAUFDUSCHEN MAIRALI
DUCHAS EROGACIÓN MAIRALI "DE PRECISIÓN"

1

2

3 - NANOQUARTZ

Photo	LF Code	Dimensions	Membrane	Suitable for	For machine model
1	**1460201**	ø 60.0 mm	200 µM	MAIRALI	ARIANNE - GIULIETTA
2	**1460206**	ø 60.0 mm	35 µM	MAIRALI	ARIANNE - GIULIETTA
3	**1081601**	ø 60.0 mm	200 µM NANOTEC	MAIRALI	ARIANNE - GIULIETTA

Docce progettate per ottenere la perfetta estrazione del caffè , acciaio Aisi 316 , certificate alimentare
Showers designed to obtain a perfect coffee brewing, Aisi 316 steel, food safe
Die Duschen wurden für die perfekte Kaffeeextraktion hergestellt,aus Aisi316 Stahl,lebensmitteltauglich-zertifiziert
Duchas planeadas para obtener la perfecta extracción del café, acero Aisi 316, certificadas uso alimentario

DOCCE EROGAZIONE MARCFI
SHOWER SCREENS MARCFI
AUSLAUFDUSCHEN MARCFI
DUCHAS EROGACIÓN MARCFI

1

Photo	LF Code	Dimensions	Suitable for	For machine model
1	**1081051**	ø 54.5 mm	MARCFI BJ-5394	---

DOCCE EROGAZIONE MARZOCCO
SHOWER SCREENS MARZOCCO
AUSLAUFDUSCHEN MARZOCCO
DUCHAS EROGACIÓN MARZOCCO

1

2

Photo	LF Code	Dimensions	Suitable for	For machine model
1	**1081023**	ø 57.5 mm	MARZOCCO L107	FB70 - FB80 - GB5 - GS3 - LINEA - MISTRAL - STRADA
2	**5054756**	ø 57.5 mm	MARZOCCO	FB70 - FB80 - GB5 - GS3 - LINEA - MISTRAL - STRADA

DOCCE EROGAZIONE MARZOCCO "DI PRECISIONE"
"PRECISION" SHOWER SCREENS MARZOCCO
"FEINMECHANISCHE" AUSLAUFDUSCHEN MARZOCCO
DUCHAS EROGACIÓN MARZOCCO "DE PRECISIÓN"

1

2

3 - NANOQUARTZ

Photo	LF Code	Dimensions	Membrane	Suitable for	For machine model
1	**1460202**	ø 56.5 mm	200 µM	MARZOCCO	FB70 - FB80 - GB5 - GS3 - LINEA - MISTRAL - STRADA
2	**1460207**	ø 57.5 mm	35 µM	MARZOCCO	FB70 - FB80 - GB5 - GS3 - LINEA - MISTRAL - STRADA
3	**1081604**	ø 56.5 mm	200 µM NANOTEC	MARZOCCO	FB70 - FB80 - GB5 - GS3 - LINEA - MISTRAL - STRADA

Docce progettate per ottenere la perfetta estrazione del caffè , acciaio Aisi 316 , certificate alimentare
Showers designed to obtain a perfect coffee brewing, Aisi 316 steel, food safe
Die Duschen wurden für die perfekte Kaffeeextraktion hergestellt,aus Aisi316 Stahl,lebensmitteltauglich-zertifiziert
Duchas planeadas para obtener la perfecta extracción del café, acero Aisi 316, certificadas uso alimentario

DOCCE EROGAZIONE MCE
SHOWER SCREENS MCE
AUSLAUFDUSCHEN MCE
DUCHAS EROGACIÓN MCE

1

2

3

Photo	LF Code	Dimensions	Suitable for	For machine model
1	**1081002**	ø 51.5 mm	MCE 27100	START
2	**1081006**	ø 51.5 mm	MCE 27100	START
3	**1081007**	ø 51.5 mm	MCE 27100	START

DOCCE EROGAZIONE NUOVA SIMONELLI
SHOWER SCREENS NUOVA SIMONELLI
AUSLAUFDUSCHEN NUOVA SIMONELLI
DUCHAS EROGACIÓN NUOVA SIMONELLI

1

2

Photo	LF Code	Dimensions	Suitable for	For machine model
1	**1081026**	ø 56.5 mm	NUOVA SIMONELLI 03000066	APPIA - AURELIA - AURELIA II - PREMIER - PROGRAM - MAC
2	**1081098**	ø 57.5 mm	NUOVA SIMONELLI 03000066.C	AURELIA IIT3

Docce erogazione gruppo caffè
Shower screens for brew group
Auslaufduschen für Kaffeegruppen
Duchas erogación grupo café

DOCCE EROGAZIONE NUOVA SIMONELLI "CIALDA"
"POD" SHOWER SCREENS NUOVA SIMONELLI
AUSLAUFDUSCHEN NUOVA SIMONELLI "PAD"
DUCHAS EROGACIÓN NUOVA SIMONELLI "CÁPSULA"

1 - POD ø 44 mm

2 - POD ø 44 mm

3 - POD ø 44 mm

Photo	LF Code	Dimensions	Suitable for	For machine model
1	**1081084**	ø 55 mm TY1	NUOVA SIMONELLI 03001431	JAZZ
2	**1081087**	ø 55 mm TY2	NUOVA SIMONELLI 03001432	JAZZ
3	**1081088**	ø 55 mm TY3	NUOVA SIMONELLI 03001433	JAZZ

DOCCE EROGAZIONE NUOVA SIMONELLI "DI PRECISIONE"
"PRECISION" SHOWER SCREENS NUOVA SIMONELLI
"FEINMECHANISCHE" AUSLAUFDUSCHEN NUOVA SIMONELLI
DUCHAS EROGACIÓN NUOVA SIMONELLI "DE PRECISIÓN"

1

2

3 - NANOQUARTZ

Photo	LF Code	Dimensions	Membrane	Suitable for	For machine model
1	**1460204**	ø 56.5 mm	200 µm	NUOVA SIMONELLI	APPIA - AURELIA - AURELIA II - PREMIER - PROGRAM - MAC
2	**1460209**	ø 57.5 mm	35 µm	NUOVA SIMONELLI	AURELIA IIT3
3	**1081603**	ø 56.5 mm	200 µM NANOTEC	NUOVA SIMONELLI	APPIA - AURELIA - AURELIA II - PREMIER - PROGRAM - MAC

Docce progettate per ottenere la perfetta estrazione del caffè , acciaio Aisi 316 , certificate alimentare
Showers designed to obtain a perfect coffee brewing, Aisi 316 steel, food safe
Die Duschen wurden für die perfekte Kaffeeextraktion hergestellt,aus Aisi316 Stahl,lebensmitteltauglich-zertifiziert
Duchas planeadas para obtener la perfecta extracción del café, acero Aisi 316, certificadas uso alimentario

DOCCE EROGAZIONE ORCHESTRALE
SHOWER SCREENS ORCHESTRALE
AUSLAUFDUSCHEN ORCHESTRALE
DUCHAS EROGACIÓN ORCHESTRALE

1

2

3

4

Photo	LF Code	Dimensions	Suitable for	For machine model
1	**1081016**	ø 60.0 mm	ORCHESTRALE D27104	ETNICA-PHONICA
2	**1081116**	ø 60.0 mm	ORCHESTRALE	ETNICA-PHONICA
3	**1081216**	ø 60.0 mm	ORCHESTRALE	ETNICA-PHONICA
4	**1081516**	ø 60.0 mm	ORCHESTRALE	ETNICA-PHONICA

DOCCE EROGAZIONE ORCHESTRALE "DI PRECISIONE"
"PRECISION" SHOWER SCREENS ORCHESTRALE
"FEINMECHANISCHE" AUSLAUFDUSCHEN ORCHESTRALE
DUCHAS EROGACIÓN ORCHESTRALE "DE PRECISIÓN"

1

2

3 - NANOQUARTZ

Photo	LF Code	Dimensions	Membrane	Suitable for	For machine model
1	**1460201**	ø 60.0 mm	200 µM	ORCHESTRALE	ETNICA-PHONICA
2	**1460206**	ø 60.0 mm	35 µM	ORCHESTRALE	ETNICA-PHONICA
3	**1081601**	ø 60.0 mm	200 µM NANOTEC	ORCHESTRALE	ETNICA-PHONICA

Docce progettate per ottenere la perfetta estrazione del caffè , acciaio Aisi 316 , certificate alimentare
Showers designed to obtain a perfect coffee brewing, Aisi 316 steel, food safe
Die Duschen wurden für die perfekte Kaffeeextraktion hergestellt,aus Aisi316 Stahl,lebensmitteltauglich-zertifiziert
Duchas planeadas para obtener la perfecta extracción del café, acero Aisi 316, certificadas uso alimentario

DOCCE EROGAZIONE PAVONI
SHOWER SCREENS PAVONI
AUSLAUFDUSCHEN PAVONI
DUCHAS EROGACIÓN PAVONI

1

2

3

4

5

Photo	LF Code	Dimensions	Suitable for	For machine model
1	**1081064**	ø 56.0 mm	PAVONI 327106	BAR - BART - CAFE - HOTEL - PUB
2	**1081026**	ø 56.5 mm	PAVONI 327105	BAR - BART - CAFE - HOTEL - PUB
3	**1081036**	ø 57.5 mm	PAVONI 327104	BAR - BART - CAFE - HOTEL - P UNO - P TRE - PUB
4	**1081536**	ø 57.5 mm	PAVONI 327104	BAR - BART - CAFE - HOTEL - P UNO - P TRE - PUB
5	**1081003**	ø 57.5 mm	PAVONI 327114	BAR - BART - CAFE - HOTEL - PUB (LEVA)

DOCCE EROGAZIONE PAVONI
SHOWER SCREENS PAVONI
AUSLAUFDUSCHEN PAVONI
DUCHAS EROGACIÓN PAVONI

1

2

3

4

Photo	LF Code	Dimensions	Suitable for	For machine model
1	**1081016**	ø 60.0 mm	PAVONI 330677	P90
2	**1081116**	ø 60.0 mm	PAVONI 330677	P90
3	**1081216**	ø 60.0 mm	PAVONI 330677	P90
4	**1081516**	ø 60.0 mm	PAVONI 330677	P90

Docce erogazione gruppo caffè
Shower screens for brew group
Auslaufduschen für Kaffeegruppen
Duchas erogación grupo café

DOCCE EROGAZIONE PAVONI "CIALDA/DOMESTIC"
SHOWER SCREENS PAVONI "CIALDA/DOMESTIC"
AUSLAUFDUSCHEN PAVONI "CIALDA/DOMESTIC"
DUCHAS EROGACIÓN PAVONI "CIALDA/DOMESTIC"

1

2

3

4

5 - POD ø 44 mm

6 - POD ø 38 mm

Photo	LF Code	Dimensions	Suitable for	For machine model
1	**5033942**	ø 48.8 mm	PAVONI 0P123740221	ESPRESSOPLUS - ESPRESSOPLUSLUSSO
2	**1081058**	ø 49.0 mm	PAVONI 0P123741421	ESPRESSOPLUS - ESPRESSOPLUSLUSSO - EUROBAR - SIMPATICO
3	**1081024**	ø 52.0 mm	PAVONI 327111	EUROPICCOLA - PROFESSIONAL (NO CAMICIA)
4	**1081020**	ø 54.0 mm	PAVONI 327115	EUROPICCOLA - PROFESSIONAL (SI CAMICIA)
5	**1081084**	ø 55.0 mm TY1	PAVONI 0R1132002W	MICROPOD
6	**1081077**	ø 55.0 mm TY38	PAVONI 0R1132001W	MICROPOD

DOCCE EROGAZIONE PAVONI "DI PRECISIONE"
PRECISION SHOWER SCREENS PAVONI
PRÄZISIONSDUSCHEN PAVONI
DUCHAS EROGACIÓN DE PRECISIÓN PAVONI

1

2

3 - NANOQUARTZ

4

5

6 - NANOQUARTZ

Photo	LF Code	Dimensions	Membrane	Suitable for	For machine model
1	**1460203**	ø 57.0 mm	200 µM	PAVONI	BAR - BART - CAFE - HOTEL - P UNO - P TRE - PUB
2	**1460208**	ø 57.0 mm	35 µM	PAVONI	BAR - BART - CAFE - HOTEL - P UNO - P TRE - PUB
3	**1081602**	ø 57.0 mm	200 µM NANOTEC	PAVONI	BAR - BART - CAFE - HOTEL - P UNO - P TRE - PUB
4	**1460201**	ø 60.0 mm	200 µM	PAVONI	P90
5	**1460206**	ø 60.0 mm	35 µM	PAVONI	P90
6	**1081601**	ø 60.0 mm	200 µM NANOTEC	PAVONI	P90

Docce progettate per ottenere la perfetta estrazione del caffè , acciaio Aisi 316 , certificate alimentare
Showers designed to obtain a perfect coffee brewing, Aisi 316 steel, food safe
Die Duschen wurden für die perfekte Kaffeeextraktion hergestellt,aus Aisi316 Stahl,lebensmitteltauglich-zertifiziert
Duchas planeadas para obtener la perfecta extracción del café, acero Aisi 316, certificadas uso alimentario

DOCCE EROGAZIONE PROMAC
SHOWER SCREENS PROMAC
AUSLAUFDUSCHEN PROMAC
DUCHAS EROGACIÓN PROMAC

1

2

3

4

5

6

Photo	LF Code	Dimensions	Suitable for	For machine model
1	**1081036**	ø 57.5 mm	PROMAC 40200005	CLUB
2	**1081536**	ø 57.5 mm	PROMAC 40200005	CLUB
3	**1081016**	ø 60.0 mm	PROMAC 80230310	GREEN - COMPACT
4	**1081116**	ø 60.0 mm	PROMAC 80230310	GREEN - COMPACT
5	**1081216**	ø 60.0 mm	PROMAC 80230310	GREEN - COMPACT
6	**1081516**	ø 60.0 mm	PROMAC 80230310	GREEN - COMPACT

DOCCE EROGAZIONE PROMAC "DI PRECISIONE"
"PRECISION" SHOWER SCREENS PROMAC
"FEINMECHANISCHE" AUSLAUFDUSCHEN PROMAC
DUCHAS EROGACIÓN PROMAC "DE PRECISIÓN"

1

2

3 - NANOQUARTZ

4

5

6 - NANOQUARTZ

Photo	LF Code	Dimensions	Membrane	Suitable for	For machine model
1	**1460203**	ø 57.0 mm	200 µM	PROMAC	CLUB
2	**1460208**	ø 57.0 mm	35 µM	PROMAC	CLUB
3	**1081602**	ø 57.0 mm	200 µM NANOTEC	PROMAC	CLUB
4	**1460201**	ø 60.0 mm	200 µM	PROMAC	GREEN - COMPACT
5	**1460206**	ø 60.0 mm	35 µM	PROMAC	GREEN - COMPACT
6	**1081601**	ø 60.0 mm	200 µM NANOTEC	PROMAC	GREEN - COMPACT

Docce progettate per ottenere la perfetta estrazione del caffè , acciaio Aisi 316 , certificate alimentare
Showers designed to obtain a perfect coffee brewing, Aisi 316 steel, food safe
Die Duschen wurden für die perfekte Kaffeeextraktion hergestellt,aus Aisi316 Stahl,lebensmitteltauglich-zertifiziert
Duchas planeadas para obtener la perfecta extracción del café, acero Aisi 316, certificadas uso alimentario

DOCCE EROGAZIONE QUICK MILL
SHOWER SCREENS QUICK MILL
AUSLAUFDUSCHEN QUICK MILL
DUCHAS EROGACIÓN QUICK MILL

1

2

Photo	LF Code	Dimensions	Suitable for	For machine model
1	**1081104**	ø 54.0 mm	QUICK MILL AC0900DO	03035 PEGASO - 0820 - 0835
2	**1081116**	ø 60.0 mm	QUICK MILL AC0970FS	0980 ANDREJA - 0995P VETRANO

Docce erogazione gruppo caffè
Shower screens for brew group
Auslaufduschen für Kaffeegruppen
Duchas erogación grupo café

DOCCE EROGAZIONE RANCILIO
SHOWER SCREENS RANCILIO
AUSLAUFDUSCHEN RANCILIO
DUCHAS EROGACIÓN RANCILIO

1

2

3

Photo	LF Code	Dimensions	Suitable for	For machine model
1	**1081003**	ø 57.5 mm	RANCILIO 40200030	CLASSE6 LEVA - CLASSE7 LEVA - S10 - Z9 - Z11
2	**1081036**	ø 57.5 mm	RANCILIO 40200005	CLASSE10 - CLASSE6 - CLASSE7 - CLASSE8 - CLASSE9 - EPOCA
3	**1081536**	ø 57.5 mm	RANCILIO 40200005	CLASSE10 - CLASSE6 - CLASSE7 - CLASSE8 - CLASSE9 - EPOCA

DOCCE EROGAZIONE RANCILIO "DI PRECISIONE"
"PRECISION" SHOWER SCREENS RANCILIO
"FEINMECHANISCHE" AUSLAUFDUSCHEN RANCILIO
DUCHAS EROGACIÓN RANCILIO "DE PRECISIÓN"

1

2

3 - NANOQUARTZ

Photo	LF Code	Dimensions	Membrane	Suitable for	For machine model
1	**1460203**	ø 57.0 mm	200 µM	RANCILIO	CLASSE10 - CLASSE6 - CLASSE7 - CLASSE8 - CLASSE9 - EPOCA
2	**1460208**	ø 57.0 mm	35 µM	RANCILIO	CLASSE10 - CLASSE6 - CLASSE7 - CLASSE8 - CLASSE9 - EPOCA
3	**1081602**	ø 57.0 mm	200 µM NANOTEC	RANCILIO	CLASSE10 - CLASSE6 - CLASSE7 - CLASSE8 - CLASSE9 - EPOCA

Docce progettate per ottenere la perfetta estrazione del caffè , acciaio Aisi 316 , certificate alimentare
Showers designed to obtain a perfect coffee brewing, Aisi 316 steel, food safe
Die Duschen wurden für die perfekte Kaffeeextraktion hergestellt,aus Aisi316 Stahl,lebensmitteltauglich-zertifiziert
Duchas planeadas para obtener la perfecta extracción del café, acero Aisi 316, certificadas uso alimentario

DOCCE EROGAZIONE RDL "CIALDA"
"POD" SHOWER SCREENS RDL
AUSLAUFDUSCHEN RDL "PAD"
DUCHAS EROGACIÓN RDL "CÁPSULA"

1 - POD ø 44 mm

2 - POD ø 44 mm

3 - POD ø 44 mm

4 - POD ø 38 mm

Photo	LF Code	Dimensions	Suitable for	For machine model
1	**1081084**	ø 55 mm TY1	RDL 1132002W	MAXI - MINI - SWEET
2	**1081087**	ø 55 mm TY2	RDL 1132003W	MINI - SWEET
3	**1081088**	ø 55 mm TY3	RDL 1132005W	SWEET
4	**1081077**	ø 55 mm TY38	RDL 1132001W	MAXI - MINI - SWEET

DOCCE EROGAZIONE RENEKA
SHOWER SCREENS RENEKA
AUSLAUFDUSCHEN RENEKA
DUCHAS EROGACIÓN RENEKA

1

2

3

4

5

6

Photo	LF Code	Dimensions	Suitable for	For machine model
1	**1081006**	ø 51.5 mm	RENEKA 9003470	BASIC - CONCEPT - LC - LIFE - MOSAIC - OEM - PILOT - PLUS
2	**1081007**	ø 51.5 mm	RENEKA 9003470	BASIC - CONCEPT - LC - LIFE - MOSAIC - OEM - PILOT - PLUS
3	**1081016**	ø 60.0 mm	RENEKA AT5471022	AMICI - ATALANTE
4	**1081116**	ø 60.0 mm	RENEKA AT5471022	AMICI - ATALANTE
5	**1081216**	ø 60.0 mm	RENEKA AT5471022	AMICI - ATALANTE
6	**1081516**	ø 60.0 mm	RENEKA AT5471022	AMICI - ATALANTE

DOCCE EROGAZIONE RENEKA "DI PRECISIONE"
"PRECISION" SHOWER SCREENS RENEKA
"FEINMECHANISCHE" AUSLAUFDUSCHEN RENEKA
DUCHAS EROGACIÓN RENEKA "DE PRECISIÓN"

1

2

3 - NANOQUARTZ

4

5

6 - NANOQUARTZ

Photo	LF Code	Dimensions	Membrane	Suitable for	For machine model
1	**1460200**	ø 51.5 mm	200 µM	RENEKA	BASIC - CONCEPT - LC - LIFE - MOSAIC - OEM - PILOT - PLUS
2	**1460205**	ø 51.5 mm	35 µM	RENEKA	BASIC - CONCEPT - LC - LIFE - MOSAIC - OEM - PILOT - PLUS
3	**1081600**	ø 51.5 mm	200 µM NANOTEC	RENEKA	BASIC - CONCEPT - LC - LIFE - MOSAIC - OEM - PILOT - PLUS
4	**1460201**	ø 60.0 mm	200 µM	RENEKA	AMICI - ATALANTE
5	**1460206**	ø 60.0 mm	35 µM	RENEKA	AMICI - ATALANTE
6	**1081601**	ø 60.0 mm	200 µM NANOTEC	RENEKA	AMICI - ATALANTE

Docce progettate per ottenere la perfetta estrazione del caffè , acciaio Aisi 316 , certificate alimentare
Showers designed to obtain a perfect coffee brewing, Aisi 316 steel, food safe
Die Duschen wurden für die perfekte Kaffeeextraktion hergestellt,aus Aisi316 Stahl,lebensmitteltauglich-zertifiziert
Duchas planeadas para obtener la perfecta extracción del café, acero Aisi 316, certificadas uso alimentario

DOCCE EROGAZIONE ROYAL
SHOWER SCREENS ROYAL
AUSLAUFDUSCHEN ROYAL
DUCHAS EROGACIÓN ROYAL

1

2

3

4

5

Photo	LF Code	Dimensions	Suitable for	For machine model
1	**1081007**	ø 51.5 mm	ROYAL 4630033	SYNCHRO
2	**1081016**	ø 60.0 mm	ROYAL 0520080	DIADEMA
3	**1081116**	ø 60.0 mm	ROYAL 0520080	DIADEMA
4	**1081216**	ø 60.0 mm	ROYAL 0520080	DIADEMA
5	**1081516**	ø 60.0 mm	ROYAL 0520080	DIADEMA

Docce erogazione gruppo caffè
Shower screens for brew group
Auslaufduschen für Kaffeegruppen
Duchas erogación grupo café

DOCCE EROGAZIONE ROYAL "DI PRECISIONE"
"PRECISION" SHOWER SCREENS ROYAL
"FEINMECHANISCHE" AUSLAUFDUSCHEN ROYAL
DUCHAS EROGACIÓN ROYAL "DE PRECISIÓN"

1

2

3 - NANOQUARTZ

4

5

6 - NANOQUARTZ

Photo	LF Code	Dimensions	Membrane	Suitable for	For machine model
1	**1460200**	ø 51.5 mm	200 µM	ROYAL	SYNCHRO
2	**1460205**	ø 51.5 mm	35 µM	ROYAL	SYNCHRO
3	**1081600**	ø 51.5 mm	200 µM NANOTEC	ROYAL	SYNCHRO
4	**1460201**	ø 60.0 mm	200 µM	ROYAL	DIADEMA
5	**1460206**	ø 60.0 mm	35 µM	ROYAL	DIADEMA
6	**1081601**	ø 60.0 mm	200 µM NANOTEC	ROYAL	DIADEMA

Docce progettate per ottenere la perfetta estrazione del caffè , acciaio Aisi 316 , certificate alimentare
Showers designed to obtain a perfect coffee brewing, Aisi 316 steel, food safe
Die Duschen wurden für die perfekte Kaffeeextraktion hergestellt,aus Aisi316 Stahl,lebensmitteltauglich-zertifiziert
Duchas planeadas para obtener la perfecta extracción del café, acero Aisi 316, certificadas uso alimentario

DOCCE EROGAZIONE SAB ITALIA
SHOWER SCREENS SAB ITALIA
AUSLAUFDUSCHEN SAB ITALIA
DUCHAS EROGACIÓN SAB ITALIA

1

2

3

4

5

Photo	LF Code	Dimensions	Suitable for	For machine model
1	**1081007**	ø 51.5 mm	SAB ITALIA SVECD001	JOLLY
2	**1081016**	ø 60.0 mm	SAB ITALIA SVTMD003	MODERNA - E96 - ELLIPSE
3	**1081116**	ø 60.0 mm	SAB ITALIA SVTMD003	MODERNA - E96 - ELLIPSE
4	**1081216**	ø 60.0 mm	SAB ITALIA SVTMD003	MODERNA - E96 - ELLIPSE
5	**1081516**	ø 60.0 mm	SAB ITALIA SVTMD003	MODERNA - E96 - ELLIPSE

DOCCE EROGAZIONE SAB ITALIA "DI PRECISIONE"
"PRECISION" SHOWER SCREENS SAB ITALIA
"FEINMECHANISCHE" AUSLAUFDUSCHEN SAB ITALIA
DUCHAS EROGACIÓN "DE PRECISIÓN" SAB ITALIA

1

2

3 - NANOQUARTZ

4

5

6 - NANOQUARTZ

Photo	LF Code	Dimensions	Membrane	Suitable for	For machine model
1	**1460200**	ø 51.5 mm	200 µM	SAB ITALIA	JOLLY
2	**1460205**	ø 51.5 mm	35 µM	SAB ITALIA	JOLLY
3	**1081600**	ø 51.5 mm	200 µM NANOTEC	SAB ITALIA	JOLLY
4	**1460201**	ø 60.0 mm	200 µM	SAB ITALIA	MODERNA - E96 - ELLIPSE
5	**1460206**	ø 60.0 mm	35 µM	SAB ITALIA	MODERNA - E96 - ELLIPSE
6	**1081601**	ø 60.0 mm	200 µM NANOTEC	SAB ITALIA	MODERNA - E96 - ELLIPSE

Docce progettate per ottenere la perfetta estrazione del caffè , acciaio Aisi 316 , certificate alimentare
Showers designed to obtain a perfect coffee brewing, Aisi 316 steel, food safe
Die Duschen wurden für die perfekte Kaffeeextraktion hergestellt,aus Aisi316 Stahl,lebensmitteltauglich-zertifiziert
Duchas planeadas para obtener la perfecta extracción del café, acero Aisi 316, certificadas uso alimentario

DOCCE EROGAZIONE SAECO
SHOWER SCREENS SAECO
AUSLAUFDUSCHEN SAECO
DUCHAS EROGACIÓN SAECO

1

2

3

4

Photo	LF Code	Dimensions	Suitable for	For machine model
1	**5055231**	ø 48,8 mm	SAECO 123741722	ARMONIA EASY - MAGIC COMBI - NICE COFFEE - VIA VENETO
2	**1081058**	ø 49.0 mm	SAECO 123741421	ARMONIA - AROMA - MAGICCAPPUCCINO
3	**1081112**	ø 49,5 mm	SAECO 11001471	NINA - NINA BAR
4	**1081021**	ø 55.0 mm	SAECO WGADM0269	AROMA

DOCCE EROGAZIONE SAECO
SHOWER SCREENS SAECO
AUSLAUFDUSCHEN SAECO
DUCHAS EROGACIÓN SAECO

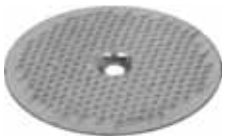
1

2

3

4

5

6

Photo	LF Code	Dimensions	Suitable for	For machine model
1	**1081028**	ø 35.5 mm	SAECO 9161.167	MAGIC - STRATOS
2	**1081059**	ø 35.8 mm	SAECO 223740300	CAFENOVA - EASY - MAGICDELUXE - ROYAL - VIENNA
3	**5047532**	ø 35,8 mm	SAECO 20000400	INCANTO S-CLASS - ROYAL - ROYAL NEW - ROYAL PROFESSIONAL
4	**5066398**	ø 35,8 mm	SAECO 11009162	INCANTO
5	**5070066**	ø 35,8 mm	SAECO 9161.268	EXPRELIA - INTELIA - MOLTIO - PRIMEA - SYNTIA - TELEA - XELSIS
6	**5033942**	ø 48.8 mm	SAECO 123740221	AROMA - GRANCREMA - RIOPROFI - VIAVENEZIA

Docce erogazione gruppo caffè
Shower screens for brew group
Auslaufduschen für Kaffeegruppen
Duchas erogación grupo café

DOCCE EROGAZIONE SAECO "DI PRECISIONE"
PRECISION SHOWER SCREENS SAECO
PRÄZISIONSDUSCHEN SAECO
DUCHAS EROGACIÓN DE PRECISIÓN SAECO

1

2

Photo	LF Code	Dimensions	Membrane	Suitable for	For machine model
1	**1081103**	ø 55 mm	200 µM	SAECO	AROMA
2	**1081099**	ø 55 mm	35 µM	SAECO	AROMA

Docce progettate per ottenere la perfetta estrazione del caffè , acciaio Aisi 316 , certificate alimentare
Showers designed to obtain a perfect coffee brewing, Aisi 316 steel, food safe
Die Duschen wurden für die perfekte Kaffeeextraktion hergestellt,aus Aisi316 Stahl,lebensmitteltauglich-zertifiziert
Duchas planeadas para obtener la perfecta extracción del café, acero Aisi 316, certificadas uso alimentario

DOCCE EROGAZIONE SAN MARCO
SHOWER SCREENS SAN MARCO
AUSLAUFDUSCHEN SAN MARCO
DUCHAS EROGACIÓN SAN MARCO

1

2

Photo	LF Code	Dimensions	Suitable for	For machine model
1	**1081041**	ø 48.0 mm	SAN MARCO 202011	105 - 100 - 95 - 85
2	**1081053**	ø 50.5 mm	SAN MARCO 202072	LEVA

DOCCE EROGAZIONE SAN MARCO "DI PRECISIONE"
"PRECISION" SHOWER SCREENS SAN MARCO
"FEINMECHANISCHE" AUSLAUFDUSCHEN SAN MARCO
DUCHAS EROGACIÓN SAN MARCO "DE PRECISIÓN"

1

2

Photo	LF Code	Dimensions	Membrane	Suitable for	For machine model
1	**1460210**	ø 48.0 mm	200 µM	SAN MARCO	105 - 100 - 95 - 85
2	**1460212**	ø 48.0 mm	35 µM	SAN MARCO	105 - 100 - 95 - 85

Docce progettate per ottenere la perfetta estrazione del caffè , acciaio Aisi 316 , certificate alimentare
Showers designed to obtain a perfect coffee brewing, Aisi 316 steel, food safe
Die Duschen wurden für die perfekte Kaffeeextraktion hergestellt,aus Aisi316 Stahl,lebensmitteltauglich-zertifiziert
Duchas planeadas para obtener la perfecta extracción del café, acero Aisi 316, certificadas uso alimentario

DOCCE EROGAZIONE SANREMO
SHOWER SCREENS SANREMO
AUSLAUFDUSCHEN SANREMO
DUCHAS EROGACIÓN SANREMO

1

2

3

4

5

Photo	LF Code	Dimensions	Suitable for	For machine model
1	**1081006**	ø 51.5 mm	SANREMO 10052170	VENEZIA
2	**1081016**	ø 60.0 mm	SANREMO 10052120	AMALFI - CAPRI - MILANO LX - PISA - TORINO - TREVISO
3	**1081116**	ø 60.0 mm	SANREMO 10052120	AMALFI - CAPRI - MILANO LX - PISA - TORINO - TREVISO
4	**1081216**	ø 60.0 mm	SANREMO 10052120	AMALFI - CAPRI - MILANO LX - PISA - TORINO - TREVISO
5	**1081516**	ø 60.0 mm	SANREMO 10052120	AMALFI - CAPRI - MILANO LX - PISA - TORINO - TREVISO

DOCCE EROGAZIONE SANREMO "DI PRECISIONE"
"PRECISION" SHOWER SCREENS SANREMO
"FEINMECHANISCHE" AUSLAUFDUSCHEN" SANREMO
DUCHAS EROGACIÓN SANREMO "DE PRECISIÓN"

1

2

3 - NANOQUARTZ

4

5

6 - NANOQUARTZ

Photo	LF Code	Dimensions	Membrane	Suitable for	For machine model
1	**1460200**	ø 51.5 mm	200 µM	SANREMO	VENEZIA
2	**1460205**	ø 51.5 mm	35 µM	SANREMO	VENEZIA
3	**1081600**	ø 51.5 mm	200 µM NANOTEC	SANREMO	VENEZIA
4	**1460201**	ø 60.0 mm	200 µM	SANREMO	AMALFI - CAPRI - MILANO LX - PISA - TORINO - TREVISO
5	**1460206**	ø 60.0 mm	35 µM	SANREMO	AMALFI - CAPRI - MILANO LX - PISA - TORINO - TREVISO
6	**1081601**	ø 60.0 mm	200 µM NANOTEC	SANREMO	AMALFI - CAPRI - MILANO LX - PISA - TORINO - TREVISO

Docce progettate per ottenere la perfetta estrazione del caffè , acciaio Aisi 316 , certificate alimentare
Showers designed to obtain a perfect coffee brewing, Aisi 316 steel, food safe
Die Duschen wurden für die perfekte Kaffeeextraktion hergestellt,aus Aisi316 Stahl,lebensmitteltauglich-zertifiziert
Duchas planeadas para obtener la perfecta extracción del café, acero Aisi 316, certificadas uso alimentario

DOCCE EROGAZIONE SCALA
SHOWER SCREENS SCALA
AUSLAUFDUSCHEN SCALA
DUCHAS EROGACIÓN SCALA

1

2

3

4

5

Photo	LF Code	Dimensions	Suitable for	For machine model
1	**1081007**	ø 51.5 mm	SCALA C-0380	NORMA
2	**1081016**	ø 60.0 mm	SCALA C-0322	BUTTERFLY - CARMEN - EROICA - IRIS
3	**1081116**	ø 60.0 mm	SCALA C-0322	BUTTERFLY - CARMEN - EROICA - IRIS
4	**1081216**	ø 60.0 mm	SCALA C-0322	BUTTERFLY - CARMEN - EROICA - IRIS
5	**1081516**	ø 60.0 mm	SCALA C-0322	BUTTERFLY - CARMEN - EROICA - IRIS

Docce erogazione gruppo caffè
Shower screens for brew group
Auslaufduschen für Kaffeegruppen
Duchas erogación grupo café

DOCCE EROGAZIONE SCALA "DI PRECISIONE"
"PRECISION" SHOWER SCREENS SCALA
"FEINMECHANISCHE" AUSLAUFDUSCHEN SCALA
DUCHAS EROGACIÓN SCALA "DE PRECISIÓN"

1

2

3 - NANOQUARTZ

4

5

6 - NANOQUARTZ

Photo	LF Code	Dimensions	Membrane	Suitable for	For machine model
1	**1460200**	ø 51.5 mm	200 µM	SCALA	NORMA
2	**1460205**	ø 51.5 mm	35 µM	SCALA	NORMA
3	**1081600**	ø 51.5 mm	200 µM NANOTEC	SCALA	NORMA
4	**1460201**	ø 60.0 mm	200 µM	SCALA	BUTTERFLY - CARMEN - EROICA - IRIS
5	**1460206**	ø 60.0 mm	35 µM	SCALA	BUTTERFLY - CARMEN - EROICA - IRIS
6	**1081601**	ø 60.0 mm	200 µM NANOTEC	SCALA	BUTTERFLY - CARMEN - EROICA - IRIS

Docce progettate per ottenere la perfetta estrazione del caffè , acciaio Aisi 316 , certificate alimentare
Showers designed to obtain a perfect coffee brewing, Aisi 316 steel, food safe
Die Duschen wurden für die perfekte Kaffeeextraktion hergestellt,aus Aisi316 Stahl,lebensmitteltauglich-zertifiziert
Duchas planeadas para obtener la perfecta extracción del café, acero Aisi 316, certificadas uso alimentario

DOCCE EROGAZIONE SGL "CIALDA"
"POD" SHOWER SCREENS SGL
AUSLAUFDUSCHEN SGL "PAD"
DUCHAS EROGACIÓN SGL "CÁPSULA"

1 - POD ø 44 mm

2 - POD ø 44 mm

3 - POD ø 44 mm

4 - POD ø 44 mm

Photo	LF Code	Dimensions	Suitable for	For machine model
1	**1081082**	ø 55 mm TY1/1	SGL CC485/1	---
2	**1081083**	ø 55 mm TY1/A	SGL CC485/A	---
3	**1081079**	ø 55 mm TY2/1	SGL CC486/1	---
4	**1081080**	ø 55 mm TY2/A	SGL CC486/A	---

DOCCE EROGAZIONE SPAZIALE
SHOWER SCREENS SPAZIALE
AUSLAUFDUSCHEN SPAZIALE
DUCHAS EROGACIÓN SPAZIALE

1

Photo	LF Code	Dimensions	Suitable for	For machine model
1	**1081046**	ø 49/52 mm	SPAZIALE 2908+2909	PROFESSIONAL - S1 - S3 - SPAZIO - NEW - S40 - S5

DOCCE EROGAZIONE SPAZIALE "DI PRECISIONE"
"PRECISION" SHOWER SCREENS SPAZIALE
"FEINMECHANISCHE" AUSLAUFDUSCHEN SPAZIALE
DUCHAS EROGACIÓN SPAZIALE "DE PRECISIÓN"

1

Photo	LF Code	Dimensions	Membrane	Suitable for	For machine model
1	**1460211**	ø 48.4 mm	200 µM	SPAZIALE	PROFESSIONAL - S1 - S3 - SPAZIO - NEW - S40 - S5

Docce progettate per ottenere la perfetta estrazione del caffè , acciaio Aisi 316 , certificate alimentare
Showers designed to obtain a perfect coffee brewing, Aisi 316 steel, food safe
Die Duschen wurden für die perfekte Kaffeeextraktion hergestellt,aus Aisi316 Stahl,lebensmitteltauglich-zertifiziert
Duchas planeadas para obtener la perfecta extracción del café, acero Aisi 316, certificadas uso alimentario

DOCCE EROGAZIONE SPINEL "CIALDA"
"POD" SHOWER SCREENS SPINEL
AUSLAUFDUSCHEN SPINEL "PAD"
DUCHAS EROGACIÓN SPINEL "CÁPSULA"

1 - POD ø 44 mm

2 - POD ø 44 mm

3 - POD ø 44 mm

4 - POD ø 38 mm

5 - POD ø 55 mm

Photo	LF Code	Dimensions	Suitable for	For machine model
1	**1081084**	ø 55 mm TY1	SPINEL SR.000.033.003	ESSE - ESSELUX - LOLITA - MINIMINILUX - PINOCCHIO - TOUR
2	**1081087**	ø 55 mm TY2	SPINEL SR.000.033.005	DUETTO - DUETTOLUX - ESSE - LOLITA - PINOCCHIO - TOUR
3	**1081088**	ø 55 mm TY3	SPINEL SR.000.033.006	DUELUX - ESSE - LOLITA - PINOCCHIO - TOUR - UNOLUX
4	**1081070**	ø 55 mm TY4 277 FORI	SPINEL SR.000.033.007	LOLITA - PINOCCHIO - TOUR
5	**1081096**	ø 70 mm TY 14gr	SPINEL SR.000.033.004	DUELUX - DUETTO - DUETTOLUX - ESSE - ESSELUX - MINIMINI

DOCCE EROGAZIONE TECNOSYSTEM "CIALDA"
"POD" SHOWER SCREENS TECNOSYSTEM
AUSLAUFDUSCHEN TECNOSYSTEM "PAD"
DUCHAS EROGACIÓN TECNOSYSTEM "CÁPSULA"

1 - POD ø 44 mm

2 - POD ø 44 mm

Photo	LF Code	Dimensions	Suitable for	For machine model
1	**1081081**	ø 55 mm TY1	TECNOSYSTEM V00/760/1	---
2	**1081078**	ø 55 mm TY2	TECNOSYSTEM V00/760/2	---

Docce erogazione gruppo caffè
Shower screens for brew group
Auslaufduschen für Kaffeegruppen
Duchas erogación grupo café

DOCCE EROGAZIONE UNIC
SHOWER SCREENS UNIC
AUSLAUFDUSCHEN UNIC
DUCHAS EROGACIÓN UNIC

1

2

Photo	LF Code	Dimensions	Suitable for	For machine model
1	**1081106**	ø 27.0 mm	UNIC	---
2	**1081062**	ø 57.5 mm	UNIC ID-103	---

DOCCE EROGAZIONE VFA
SHOWER SCREENS VFA
AUSLAUFDUSCHEN VFA
DUCHAS EROGACIÓN VFA

1

2

3

4

Photo	LF Code	Dimensions	Suitable for	For machine model
1	**1081016**	ø 60.0 mm	VFA	---
2	**1081116**	ø 60.0 mm	VFA	---
3	**1081216**	ø 60.0 mm	VFA	---
4	**1081516**	ø 60.0 mm	VFA	---

DOCCE EROGAZIONE VFA "DI PRECISIONE"
"PRECISION" SHOWER SCREENS VFA
"FEINMECHANISCHE" AUSLAUFDUSCHEN VFA
DUCHAS EROGACIÓN VFA "DE PRECISIÓN"

1

2

3 - NANOQUARTZ

Photo	LF Code	Dimensions	Membrane	Suitable for	For machine model
1	**1460201**	ø 60.0 mm	200 µM	VFA	---
2	**1460206**	ø 60.0 mm	35 µM	VFA	---
3	**1081601**	ø 60.0 mm	200 µM NANOTEC	VFA	---

Docce progettate per ottenere la perfetta estrazione del caffè , acciaio Aisi 316 , certificate alimentare
Showers designed to obtain a perfect coffee brewing, Aisi 316 steel, food safe
Die Duschen wurden für die perfekte Kaffeeextraktion hergestellt,aus Aisi316 Stahl,lebensmitteltauglich-zertifiziert
Duchas planeadas para obtener la perfecta extracción del café, acero Aisi 316, certificadas uso alimentario

DOCCE EROGAZIONE VIBIEMME
SHOWER SCREENS VIBIEMME
AUSLAUFDUSCHEN VIBIEMME
DUCHAS EROGACIÓN VIBIEMME

1

2

3

4

Photo	LF Code	Dimensions	Suitable for	For machine model
1	**1081016**	ø 60.0 mm	VIBIEMME FILTDCREGR	CHIMAERA - CUBO - DOMOBAR - MERCURY - MINIMAX - REPLICA
2	**1081116**	ø 60.0 mm	VIBIEMME FILTDCREGR	CHIMAERA - CUBO - DOMOBAR - MERCURY - MINIMAX - REPLICA
3	**1081216**	ø 60.0 mm	VIBIEMME FILTDCREGR	CHIMAERA - CUBO - DOMOBAR - MERCURY - MINIMAX - REPLICA
4	**1081516**	ø 60.0 mm	VIBIEMME FILTDCREGR	CHIMAERA - CUBO - DOMOBAR - MERCURY - MINIMAX - REPLICA

DOCCE EROGAZIONE VIBIEMME "DI PRECISIONE"
"PRECISION" SHOWER SCREENS VIBIEMME
"FEINMECHANISCHE" AUSLAUFDUSCHEN VIBIEMME
DUCHAS EROGACIÓN VIBIEMME "DE PRECISIÓN"

1

2

3 - NANOQUARTZ

Photo	LF Code	Dimensions	Membrane	Suitable for	For machine model
1	**1460201**	ø 60.0 mm	200 µM	VIBIEMME	CHIMAERA - CUBO - DOMOBAR - MERCURY - MINIMAX - REPLICA
2	**1460206**	ø 60.0 mm	35 µM	VIBIEMME	CHIMAERA - CUBO - DOMOBAR - MERCURY - MINIMAX - REPLICA
3	**1081601**	ø 60.0 mm	200 µM NANOTEC	VIBIEMME	CHIMAERA - CUBO - DOMOBAR - MERCURY - MINIMAX - REPLICA

Docce progettate per ottenere la perfetta estrazione del caffè , acciaio Aisi 316 , certificate alimentare
Showers designed to obtain a perfect coffee brewing, Aisi 316 steel, food safe
Die Duschen wurden für die perfekte Kaffeeextraktion hergestellt,aus Aisi316 Stahl,lebensmitteltauglich-zertifiziert
Duchas planeadas para obtener la perfecta extracción del café, acero Aisi 316, certificadas uso alimentario

DOCCE EROGAZIONE VICTORIA ARDUINO
SHOWER SCREENS VICTORIA ARDUINO
AUSLAUFDUSCHEN VICTORIA ARDUINO
DUCHAS EROGACIÓN VICTORIA ARDUINO

1

2

3

Photo	LF Code	Dimensions	Suitable for	For machine model
1	**1081006**	ø 51.5 mm	VICTORIA ARDUINO 40300022	ATHENA - VENUSBAR - VENUSCENTURY
2	**1081026**	ø 56.5 mm	VICTORIA ARDUINO 03000066	ADONIS - VENUSFAMILY
3	**1081003**	ø 57.5 mm	VICTORIA ARDUINO 17000024	ATHENA LEVA

DOCCE EROGAZIONE VICTORIA ARDUINO
SHOWER SCREENS VICTORIA ARDUINO
AUSLAUFDUSCHEN VICTORIA ARDUINO
DUCHAS EROGACIÓN VICTORIA ARDUINO

1

2

3

4

Photo	LF Code	Dimensions	Suitable for	For machine model
1	**1081016**	ø 60.0 mm	VICTORIA ARDUINO 17010003	ATHENA LEVA (NEW)
2	**1081116**	ø 60.0 mm	VICTORIA ARDUINO 17010003	ATHENA LEVA (NEW)
3	**1081216**	ø 60.0 mm	VICTORIA ARDUINO 17010003	ATHENA LEVA (NEW)
4	**1081516**	ø 60.0 mm	VICTORIA ARDUINO 17010003	ATHENA LEVA (NEW)

DOCCE EROGAZIONE VICTORIA ARDUINO "DI PRECISIONE"
PRECISION SHOWER SCREENS VITTORIA ARDUINO
PRÄZISIONSDUSCHEN VITTORIA ARDUINO
DUCHAS EROGACIÓN DE PRECISIÓN VITTORIA ARDUINO

1

2

3 - NANOQUARTZ

Photo	LF Code	Dimensions	Membrane	Suitable for	For machine model
1	**1460201**	ø 60.0 mm	200 µM	VICTORIA ARDUINO	ATHENA LEVA (NEW)
2	**1460206**	ø 60.0 mm	35 µM	VICTORIA ARDUINO	ATHENA LEVA (NEW)
3	**1081601**	ø 60.0 mm	200 µM NANOTEC	VICTORIA ARDUINO	ATHENA LEVA (NEW)

Docce progettate per ottenere la perfetta estrazione del caffè , acciaio Aisi 316 , certificate alimentare
Showers designed to obtain a perfect coffee brewing, Aisi 316 steel, food safe
Die Duschen wurden für die perfekte Kaffeeextraktion hergestellt,aus Aisi316 Stahl,lebensmitteltauglich-zertifiziert
Duchas planeadas para obtener la perfecta extracción del café, acero Aisi 316, certificadas uso alimentario

DOCCE EROGAZIONE VICTORIA ARDUINO "DI PRECISIONE"
PRECISION SHOWER SCREENS VITTORIA ARDUINO
PRÄZISIONSDUSCHEN VITTORIA ARDUINO
DUCHAS EROGACIÓN DE PRECISIÓN VITTORIA ARDUINO

1

2

3 - NANOQUARTZ

4

5

6 - NANOQUARTZ

Photo	LF Code	Dimensions	Membrane	Suitable for	For machine model
1	**1460200**	ø 51.5 mm	200 µM	VICTORIA ARDUINO	ATHENA - VENUSBAR - VENUSCENTURY
2	**1460205**	ø 51.5 mm	35 µM	VICTORIA ARDUINO	ATHENA - VENUSBAR - VENUSCENTURY
3	**1081600**	ø 51.5 mm	200 µM NANOTEC	VICTORIA ARDUINO	ATHENA - VENUSBAR - VENUSCENTURY
4	**1460204**	ø 56.5 mm	200 µm	VICTORIA ARDUINO	ADONIS - VENUSFAMILY
5	**1460209**	ø 57.5 mm	35 µm	VICTORIA ARDUINO	ADONIS - VENUSFAMILY
6	**1081603**	ø 56.5 mm	200 µm NANOTEC	VICTORIA ARDUINO	ADONIS - VENUSFAMILY

Docce progettate per ottenere la perfetta estrazione del caffè , acciaio Aisi 316 , certificate alimentare
Showers designed to obtain a perfect coffee brewing, Aisi 316 steel, food safe
Die Duschen wurden für die perfekte Kaffeeextraktion hergestellt,aus Aisi316 Stahl,lebensmitteltauglich-zertifiziert
Duchas planeadas para obtener la perfecta extracción del café, acero Aisi 316, certificadas uso alimentario

DOCCE EROGAZIONE VISACREM
SHOWER SCREENS VISACREM
AUSLAUFDUSCHEN VISACREM
DUCHAS EROGACIÓN VISACREM

1

2

3

4

5

Photo	LF Code	Dimensions	Suitable for	For machine model
1	**1081250**	ø 57.0 mm	VISACREM 01602002	PALANCA
2	**1081016**	ø 60.0 mm	VISACREM 02610004	BRAVA - NERA - V6
3	**1081116**	ø 60.0 mm	VISACREM 02610004	BRAVA - NERA - V6
4	**1081216**	ø 60.0 mm	VISACREM 02610004	BRAVA - NERA - V6
5	**1081516**	ø 60.0 mm	VISACREM 02610004	BRAVA - NERA - V6

DOCCE EROGAZIONE VISACREM "DI PRECISIONE"
"PRECISION" SHOWER SCREENS VISACREM
"FEINMECHANISCHE" AUSLAUFDUSCHEN VISACREM
DUCHAS EROGACIÓN VISACREM "DE PRECISIÓN"

1

2

3 - NANOQUARTZ

Photo	LF Code	Dimensions	Membrane	Suitable for	For machine model
1	**1460201**	ø 60.0 mm	200 µM	VISACREM	BRAVA - NERA - V6
2	**1460206**	ø 60.0 mm	35 µM	VISACREM	BRAVA - NERA - V6
3	**1081601**	ø 60.0 mm	200 µM NANOTEC	VISACREM	BRAVA - NERA - V6

Docce progettate per ottenere la perfetta estrazione del caffè , acciaio Aisi 316 , certificate alimentare
Showers designed to obtain a perfect coffee brewing, Aisi 316 steel, food safe
Die Duschen wurden für die perfekte Kaffeeextraktion hergestellt,aus Aisi316 Stahl,lebensmitteltauglich-zertifiziert
Duchas planeadas para obtener la perfecta extracción del café, acero Aisi 316, certificadas uso alimentario

DOCCE EROGAZIONE WEGA
SHOWER SCREENS WEGA
AUSLAUFDUSCHEN WEGA
DUCHAS EROGACIÓN WEGA

1

2

3

4

Photo	LF Code	Dimensions	Suitable for	For machine model
1	**1081016**	ø 60.0 mm	WEGA WY27104	AIRI - ORION ECO - ATLAS - NOVA - COMBI NOVA - JUNIOR
2	**1081116**	ø 60.0 mm	WEGA WY27104	AIRI - ORION ECO - ATLAS - NOVA - COMBI NOVA - JUNIOR
3	**1081216**	ø 60.0 mm	WEGA WY27104	AIRI - ORION ECO - ATLAS - NOVA - COMBI NOVA - JUNIOR
4	**1081516**	ø 60.0 mm	WEGA WY27104	AIRI - ORION ECO - ATLAS - NOVA - COMBI NOVA - JUNIOR

Docce erogazione gruppo caffè
Shower screens for brew group
Auslaufduschen für Kaffeegruppen
Duchas erogación grupo café

DOCCE EROGAZIONE WEGA
SHOWER SCREENS WEGA
AUSLAUFDUSCHEN WEGA
DUCHAS EROGACIÓN WEGA

1

2

3

4

Photo	LF Code	Dimensions	Suitable for	For machine model
1	**1081041**	ø 48.0 mm	WEGA WY27100001	CONCEPT52
2	**1081006**	ø 51.5 mm	WEGA WY27100	CONCEPT56 - COLOSSEUM - ESPRESSA - EURO 2000 - STAR
3	**1081007**	ø 51.5 mm	WEGA WY27100	CONCEPT56 - COLOSSEUM - ESPRESSA - EURO 2000 - STAR
4	**1081003**	ø 57.5 mm	WEGA WY27101	LEVA

DOCCE EROGAZIONE WEGA "DI PRECISIONE"
PRECISION SHOWER SCREENS WEGA
PRÄZISIONSDUSCHEN WEGA
DUCHAS EROGACIÓN DE PRECISIÓN WEGA

1

2

3 - NANOQUARTZ

Photo	LF Code	Dimensions	Membrane	Suitable for	For machine model
1	**1460201**	ø 60.0 mm	200 µM	WEGA	AIRI - ORION ECO - ATLAS - NOVA - COMBI NOVA - JUNIOR
2	**1460206**	ø 60.0 mm	35 µM	WEGA	AIRI - ORION ECO - ATLAS - NOVA - COMBI NOVA - JUNIOR
3	**1081601**	ø 60.0 mm	200 µM NANOTEC	WEGA	AIRI - ORION ECO - ATLAS - NOVA - COMBI NOVA - JUNIOR

Docce progettate per ottenere la perfetta estrazione del caffè , acciaio Aisi 316 , certificate alimentare
Showers designed to obtain a perfect coffee brewing, Aisi 316 steel, food safe
Die Duschen wurden für die perfekte Kaffeeextraktion hergestellt,aus Aisi316 Stahl,lebensmitteltauglich-zertifiziert
Duchas planeadas para obtener la perfecta extracción del café, acero Aisi 316, certificadas uso alimentario

DOCCE EROGAZIONE WEGA "DI PRECISIONE"
PRECISION SHOWER SCREENS WEGA
PRÄZISIONSDUSCHEN WEGA
DUCHAS EROGACIÓN DE PRECISIÓN WEGA

1

2

3

4

5 - NANOQUARTZ

Photo	LF Code	Dimensions	Membrane	Suitable for	For machine model
1	**1460210**	ø 48.0 mm	200 µM	WEGA	CONCEPT52
2	**1460212**	ø 48.0 mm	35 µM	WEGA	CONCEPT52
3	**1460200**	ø 51.5 mm	200 µM	WEGA	CONCEPT56 - COLOSSEUM - ESPRESSA - EURO 2000 - STAR
4	**1460205**	ø 51.5 mm	35 µM	WEGA	CONCEPT56 - COLOSSEUM - ESPRESSA - EURO 2000 - STAR
5	**1081600**	ø 51.5 mm	200 µM NANOTEC	WEGA	CONCEPT56 - COLOSSEUM - ESPRESSA - EURO 2000 - STAR

Docce progettate per ottenere la perfetta estrazione del caffè , acciaio Aisi 316 , certificate alimentare
Showers designed to obtain a perfect coffee brewing, Aisi 316 steel, food safe
Die Duschen wurden für die perfekte Kaffeeextraktion hergestellt,aus Aisi316 Stahl,lebensmitteltauglich-zertifiziert
Duchas planeadas para obtener la perfecta extracción del café, acero Aisi 316, certificadas uso alimentario

DOCCE EROGAZIONE ZACCONI
SHOWER SCREENS ZACCONI
AUSLAUFDUSCHEN ZACCONI
DUCHAS EROGACIÓN ZACCONI

1

Photo	LF Code	Dimensions	Suitable for	For machine model
1	**1081107**	ø 48.0 mm	ZACCONI 59	ESPRESSO BABY - RIVIERA

ELETTROPOMPE PER ACQUA FLOJET
ELECTROPUMPS FOR WATER FLOJET
ELEKTROPUMPEN FÜR ACQUA FLOJET
ELECTROBOMBAS PARA AGUA FLOJET

1

2

Photo	LF Code	Power supply in - out	Flow rate
1	**1122500**	in 100/240V 50/60Hz 1,5A - out 12VDC 3A	1,0GPM / 3,78LPM
2	**1122502**	---	---

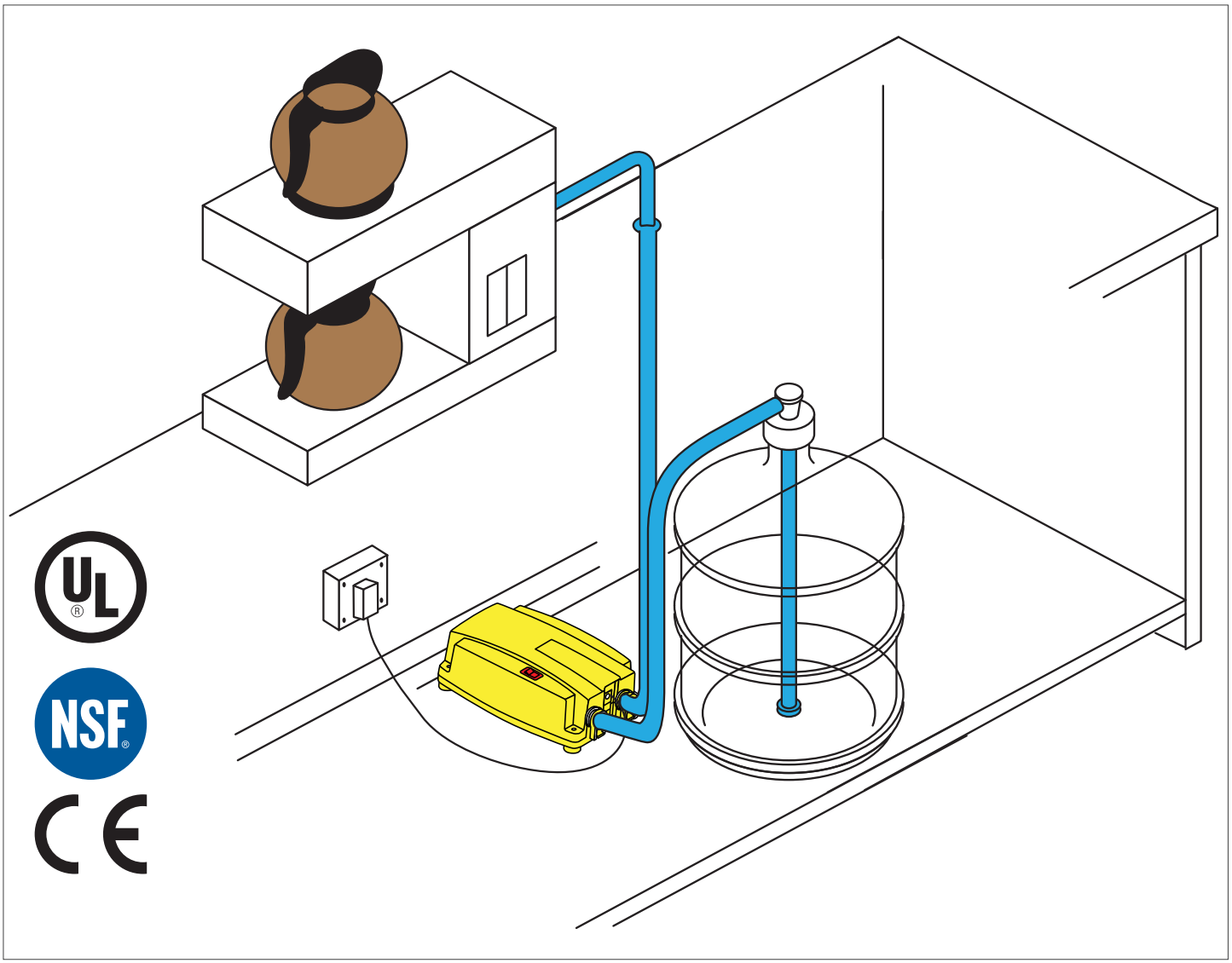

ELETTROVALVOLE AE
SOLENOID VALVES AE
MAGNETVENTILE AE
ELECTROVÁLVULAS AE

1

2

3

Photo	LF Code	Connections (ø)	Outlet (ø)	Coil type	Suitable for
1	**1120169**	1/8	7 mm	13VA 220/240V 50Hz	GRIMAC MG355/1
1	**1120169**	1/8	7 mm	13VA 220/240V 50Hz	LAVAZZA 10079018
1	**1120169**	1/8	7 mm	13VA 220/240V 50Hz	SPINEL SR.000.032.012
2	**1120183**	1/8	---	13VA 220/240V 50Hz	FIAMMA 4.0.002.0041
2	**1120183**	1/8	---	13VA 220/240V 50Hz	LAVAZZA 10087154
3	**1120270**	1/8	7 mm	13VA 220/240V 50Hz	DIDIESSE FR007

ELETTROVALVOLE CEME 2 VIE
SOLENOID VALVES CEME 2 WAYS
MAGNETVENTILE CEME 2-WEGE
ELECTROVÁLVULAS CEME 2 VÍAS

1

2

3

4

5

6

Photo	LF Code	Connections (ø)	Orifice (ø)	Seal	Model	Coil type	Suitable for
1	**1120230**	1/4	2.5	VITON	6712	B6 17VA 230V 50Hz	---
1	**1120231**	1/4	2.8	VITON	6712	B6 17VA 230V 50Hz	---
2	**1120040**	1/4	2.0	EPDM	6610	B6 17VA 230V 50Hz	NUOVA SIMONELLI 04100005
2	**1120232**	1/4	3.0	VITON	6612	B6 17VA 230V 50Hz	---
3	**1120236**	1/8	2.0	VITON	5220	B4 13.5VA 230V 50Hz	---
3	**1120186**	1/8	2.0	VITON	5510	B4 13.5VA 230V 50Hz	RDL 14210040
3	**1120186**	1/8	2.0	VITON	5510	B4 13.5VA 230V 50Hz	PAVONI 0R14210040
4	**1120237**	1/8	2.0	VITON	5220	B4 13.5VA 230V 50Hz	---
4	**1120238**	1/8	2.0	VITON	5220	B4 14VA 100/120V 60Hz	ECM MANUFACTURE US1005
4	**1120238**	1/8	2.0	VITON	5220	B4 14VA 100/120V 60Hz	NUOVA SIMONELLI 04100043
4	**1120238**	1/8	2.0	VITON	5220	B4 14VA 100/120V 60Hz	QUICK MILL EV09800V1
4	**1120238**	1/8	2.0	VITON	5220	B4 14VA 100/120V 60Hz	SAN MARCO 108677A
4	**1120238**	1/8	2.0	VITON	5220	B4 14VA 100/120V 60Hz	SCALA C-0300
5	**1120254**	QUICK - RAPIDI	2.7	NBR	5220	B4 13.5VA 230V 50Hz	DELONGHI 5213210171
5	**1120250**	QUICK - RAPIDI	2.7	VITON	5220	B4 13.5VA 230V 50Hz	DELONGHI 5213215771
5	**5087146**	QUICK - RAPIDI	2.7	VITON	5220	B4 13.5VA 230V 50Hz	DELONGHI 5513225701
6	**1120471**	1/4	3.0	VITON	6660	B6 17VA 230V 50Hz	NUOVA SIMONELLI 04100024
6	**1120471**	1/4	3.0	VITON	6660	B6 17VA 230V 50Hz	VICTORIA ARDUINO 04100024

ELETTROVALVOLE CEME 3 VIE
SOLENOID VALVES CEME 3-WAYS
MAGNETVENTILE CEME 3 WEGE
ELECTROVÁLVULAS CEME 3-VÍAS

1

2

3

4

Photo	LF Code	Connections (ø)	Orifice (ø)	Seal	Outlet (ø)	Model	Coil type	Suitable for
1	**1120228**	---	1.5	VITON	1/8	6270	B6 17VA 230V 50Hz	---
2	**1120229**	1/8	1.5	VITON	1/8	6211	B6 17VA 230V 50Hz	---
3	**1120233**	1/8	1.2	VITON	7 mm	5320	B4 13.5VA 230V 50Hz	LA PICCOLA C06-230
3	**1120233**	1/8	1.2	VITON	7 mm	5320	B4 13.5VA 230V 50Hz	NUOVA SIMONELLI 04100046
3	**1120233**	1/8	1.2	VITON	7 mm	5320	B4 13.5VA 230V 50Hz	VICTORIA ARDUINO 04100046
3	**1120174**	1/8	2.0	VITON	7 mm	5315	B4 13.5VA 230V 50Hz	LAVAZZA 10079018
3	**5020858**	1/8	2.0	VITON	7 mm	5320	B4 17VA 208/240V 50/60Hz	NUOVA SIMONELLI 04100054
4	**1120234**	1/8	1.2	VITON	7 mm	5320	B4 13.5VA 230V 50Hz	---

ELETTROVALVOLE CEME 3 VIE
SOLENOID VALVES CEME 3-WAYS
MAGNETVENTILE CEME 3 WEGE
ELECTROVÁLVULAS CEME 3-VÍAS

1

2

3

Photo	LF Code	Connections (ø)	Orifice (ø)	Seal	Outlet (ø)	Model	Coil type	Suitable for
1	**1120257**	QUICK - RAPIDI	2.7	VITON	7 mm	5301	B4 13.5VA 230V 50Hz	DELONGHI 5213214021
1	**D120016**	QUICK - RAPIDI	2.7	VITON	7 mm	5301	B4 13.5VA 230V 50Hz	DELONGHI 5213214031
1	**1120277**	QUICK - RAPIDI	2.7	VITON	7 mm	5301	B4 13.5VA 230V 50Hz	DELONGHI 5213218381
1	**D120008**	QUICK - RAPIDI	2.7	VITON	7 mm	5301	B4 13.5VA 230V 50Hz	DELONGHI 5213218371
1	**1120285**	QUICK - RAPIDI	2.7	VITON	7 mm	5301	B4 13.5VA 230V 50Hz	DELONGHI 5213218431
2	**5054446**	QUICK - RAPIDI	1.0	VITON	7 mm	5301	B4 13.5VA 230V 50Hz	DELONGHI 5513225711
2	**5070578**	QUICK - RAPIDI	1.0	VITON	7 mm	5301	B4 13.5VA 230V 50Hz	DELONGHI 5213218471
3	**D120007**	QUICK - RAPIDI	2.7	VITON	7 mm	5330	B4 13.5VA 230V 50Hz	DELONGHI 5213218261
3	**5084157**	QUICK - RAPIDI	2.7	VITON	7 mm	5330	B4 13.5VA 230V 50Hz	DELONGHI 5213218251

BOBINE CEME
COILS CEME
SPULEN CEME
BOBINAS CEME

1

Photo	LF Code	Model	Width-height-depth (mm)
1	**1199316**	B4 13.5VA 230V 50Hz	22x30x27.5

ELETTROVALVOLE LUCIFER 2 VIE
SOLENOID VALVES LUCIFER 2 WAYS
MAGNETVENTILE LUCIFER 2 WEGE
ELECTROVÁLVULAS LUCIFER 2 VÍAS

1

2

Photo	LF Code	Connections (ø)	Orifice (ø)	Seal	Model	Coil type	Suitable for
1	**1120331**	---	3.5	RUBINO	121FS1651A	9W 220/240V 50/60Hz	ALL BRANDS - TUTTE LE MARCHE
2	**1120460**	1/8	2.5	VITON	7121ZBG1LV00	9W 220/240V 50/60Hz	ALL BRANDS - TUTTE LE MARCHE
2	**1120466**	1/8	2.5	VITON	7121ZBG1LV00	9W 110/115/120V 50/60Hz	ALL BRANDS - TUTTE LE MARCHE
2	**1120461**	1/8	2.5	RUBINO	7121ZBG1LR00	9W 220/240V 50/60Hz	ALL BRANDS - TUTTE LE MARCHE

ELETTROVALVOLE LUCIFER 3 VIE
SOLENOID VALVES LUCIFER 3 WAYS
MAGNETVENTILE LUCIFER 3 WEGE
ELECTROVÁLVULAS LUCIFER 3 VÍAS

1

2

Photo	LF Code	Connections (ø)	Orifice (ø)	Seal	Outlet (ø)	Model	Coil type	Suitable for
1	**1120330**	---	2.5	RUBINO	1/8 CONIC	E131F4304	9W 220/240V 50/60Hz	ALL BRANDS - TUTTE LE MARCHE
1	**1120102**	---	1.5	RUBINO	1/8 CONIC	E131F4304	9W 110/115/120V 50/60Hz	ALL BRANDS - TUTTE LE MARCHE
1	**5069161**	---	2.5	RUBINO	1/8 CONIC	E131F4304	9W 24VAC 50/60Hz	ALL BRANDS - TUTTE LE MARCHE
2	**1120334**	---	1.5	RUBINO	1/8 CONIC	E131F4304	---	ALL BRANDS - TUTTE LE MARCHE

BOBINE LUCIFER
COILS LUCIFER
SPULEN LUCIFER
BOBINAS LUCIFER

1

Photo	LF Code	Model	Width-height-depth (mm)
1	**1120332**	9W 220/240V 50/60Hz	32x38x43
1	**1120333**	483510P0 24VAC 9W 50/60Hz	32x38x43
1	**1120363**	483510S5 9W 115V 50/60Hz	32x38x43

ELETTROVALVOLE M&M
SOLENOID VALVES M&M
MAGNETVENTILE M&M
ELECTROVÁLVULAS M&M

1

2

Photo	LF Code	Connections (ø)	Orifice (ø)	Seal	Outlet (ø)	Model	Coil type	Suitable for
1	**1120167**	1/8	1.2	VITON	6.5	B397	2700 10VA 230/240V 50/60Hz	LAVAZZA 10079018
1	**1120167**	1/8	1.2	VITON	6.5	B397	2700 10VA 230/240V 50/60Hz	SPINEL SR.000.032.001
2	**1120501**	1/8	2.0	VITON	---	B297DVE	2700 10VA 230/240V 50/60Hz	GRIMAC 1160400045-V190
2	**1120501**	1/8	2.0	VITON	---	B297DVE	2700 10VA 230/240V 50/60Hz	SPINEL SR.000.032.000

BOBINE M&M
COILS M&M
SPULEN M&M
BOBINAS M&M

1

Photo	LF Code	Model	Width-height-depth (mm)
1	**3610026**	2700 10VA 230/240V 50/60Hz	23x33x30
1	**3610027**	2200 10VA 24VAC 50/60Hz	23x33x30

ELETTROVALVOLE ODE 2 VIE
SOLENOID VALVES ODE2 WAYS
MAGNETVENTILE ODE 2 WEGE
ELECTROVÁLVULAS ODE 2 VÍAS

1

2

3

4

5

Photo	LF Code	Connections (ø)	Orifice (ø)	Seal	Model	Coil type	Suitable for
1	**1120802**	---	2.0	RUBINO	21A	8W 220/230V 50/60Hz	BIANCHI 25034316
1	**1120802**	---	2.0	RUBINO	21A	8W 220/230V 50/60Hz	LAVAZZA 10084194
2	**1120260**	1/8	1.5	VITON	21A	8W 220/230V 50/60Hz	VIBIEMME ELETELE2VAU22
2	**1120282**	1/8	2.5	VITON	21A	8W 220/230V 50/60Hz	MARZOCCO L053.02
2	**5085059**	1/8	2.5	VITON	21A	8W 200V 50/60Hz	MARZOCCO L053/200
2	**1120283**	1/8	2.5	VITON	21A	8W 110/120V 50/60Hz	MARZOCCO L053/110.01
2	**1120804**	1/8	3.0	RUBINO	21A	8W 220/230V 50/60Hz	---
2	**1120808**	1/8	3.0	VITON	21A	8W 220/230V 50/60Hz	VIBIEMME ELETELE2AU22
2	**1120814**	1/8	3.0	RUBINO	21A	8W 110V	---
2	**1120813**	1/8	3.0	VITON	21A	8W 110V	---
2	**1120164**	1/4	1.1	VITON	21A	8W 220/230V 50/60Hz	---
2	**1120243**	1/4	1.5	VITON	21A	8W 220/230V 50/60Hz	GAGGIA DM1197/220/5060
2	**1120243**	1/4	1.5	VITON	21A	8W 220/230V 50/60Hz	NUOVA SIMONELLI 04100029
2	**1120243**	1/4	1.5	VITON	21A	8W 220/230V 50/60Hz	SAECO DM1197/220/5060
2	**1120243**	1/4	1.5	VITON	21A	8W 220/230V 50/60Hz	VICTORIA ARDUINO 04100029
2	**1120816**	1/4	2.0	VITON	21A	8W 110V	---
2	**1120134**	1/4	2.5	VITON	21A	8W 220/230V 50/60Hz	NUOVA SIMONELLI 04100030
2	**1120134**	1/4	2.5	VITON	21A	8W 220/230V 50/60Hz	VICTORIA ARDUINO 04100030
2	**1120803**	1/4	3.0	VITON	21A	8W 220/230V 50/60Hz	---
2	**1120215**	1/4	4.5	VITON	21A	8W 24VDC	---
2	**1120240**	1/4	4.5	VITON	21A	8W 220/230V 50/60Hz	ASTORIA/CMA 18161977
2	**1120240**	1/4	4.5	VITON	21A	8W 220/230V 50/60Hz	WEGA WY18161977
2	**5033799**	1/4	5.5	VITON	21A	8W 24VAC 50/60Hz	SPAZIALE 04843
2	**1120346**	1/4	5.5	VITON	520	12W 24VDC	MARZOCCO B.2.020
3	**1120807**	1/4	2.8	VITON	21T	8W 220/230V 50/60Hz	---
4	**1120248**	1/4	3.0	EPDM	21A	8W 220/230V 50/60Hz	ASTORIA/CMA 18161981
4	**1120248**	1/4	3.0	EPDM	21A	8W 220/230V 50/60Hz	WEGA WY18161981
5	**1120012**	1/8	2.3	VITON	21J	5W 230V 50/60Hz	ECM MANUFACTURE C199900275
5	**1120012**	1/8	2.3	VITON	21J	5W 230V 50/60Hz	NUOVA SIMONELLI 04100042
5	**1120012**	1/8	2.3	VITON	21J	5W 230V 50/60Hz	QUICK MILL EV08700R
5	**1120012**	1/8	2.3	VITON	21J	5W 230V 50/60Hz	SAN MARCO 108677
5	**1120012**	1/8	2.3	VITON	21J	5W 230V 50/60Hz	SCALA C-0302
5	**1120157**	1/8	2.3	VITON	21J	5W 220V 60Hz	CONTI 411476
5	**1120272**	1/8	2.0	VITON	21J	7W 24VDC	SAECO 11024038

ELETTROVALVOLE ODE 2/3 VIE TECNOPOLIMERO
SOLENOID VALVES ODE 2/3 WAYS TECNOPOLYMER
MAGNETVENTILE ODE 2/3 WEGE TECHNOPOLYMER
ELECTROVÁLVULAS ODE 2/3 VIAS TECNOPOLIMERO

1

2

3

4

Photo	LF Code	Connections (ø)	Orifice (ø)	Seal	Model	Coil type	Suitable for
1	**1120268**	---	1.5	RUBINO	31A TECHNOPOLYMER PPS	16VA 230/240V 50/60Hz	CASADIO 533894600R
1	**1120268**	---	1.5	RUBINO	31A TECHNOPOLYMER PPS	16VA 230/240V 50/60Hz	CIMBALI 533-894-600R
1	**1120268**	---	1.5	RUBINO	31A TECHNOPOLYMER PPS	16VA 230/240V 50/60Hz	FAEMA 533894600R
1	**1120268**	---	1.5	RUBINO	31A TECHNOPOLYMER PPS	16VA 230/240V 50/60Hz	NUOVA SIMONELLI 04100027
1	**1120268**	---	1.5	RUBINO	31A TECHNOPOLYMER PPS	16VA 230/240V 50/60Hz	RANCILIO 34040149
1	**1120268**	---	1.5	RUBINO	31A TECHNOPOLYMER PPS	16VA 230/240V 50/60Hz	SAN MARCO 108063UL
1	**1120268**	---	1.5	RUBINO	31A TECHNOPOLYMER PPS	16VA 230/240V 50/60Hz	VICTORIA ARDUINO 04100027
1	**1120286**	---	1.5	RUBINO	31A TECHNOPOLYMER PPS	24VAC 50/60Hz	CIMBALI 533-892-300R
1	**1120286**	---	1.5	RUBINO	31A TECHNOPOLYMER PPS	24VAC 50/60Hz	FAEMA 533892300R
1	**5501167**	---	1.5	RUBINO	31A TECHNOPOLYMER PPS	8W 24VDC	CASADIO 533896500R
1	**5501167**	---	1.5	RUBINO	31A TECHNOPOLYMER PPS	8W 24VDC	CIMBALI 533-896-500R
1	**5501167**	---	1.5	RUBINO	31A TECHNOPOLYMER PPS	8W 24VDC	FAEMA 533896500R
1	**5501167**	---	1.5	RUBINO	31A TECHNOPOLYMER PPS	8W 24VDC	RANCILIO 34040024
2	**1120280**	---	1.5	RUBINO	31A TECHNOPOLYMER PPS	14,5VA 110V 50/60Hz	BFC
2	**1120280**	---	1.5	RUBINO	31A TECHNOPOLYMER PPS	14,5VA 110V 50/60Hz	ECM C100002230
2	**1120280**	---	1.5	RUBINO	31A TECHNOPOLYMER PPS	14,5VA 110V 50/60Hz	ECM MANUFACTURE US1007
2	**1120280**	---	1.5	RUBINO	31A TECHNOPOLYMER PPS	14,5VA 110V 50/60Hz	FRACINO FC125/110
2	**1120280**	---	1.5	RUBINO	31A TECHNOPOLYMER PPS	14,5VA 110V 50/60Hz	ROYAL
2	**1120280**	---	1.5	RUBINO	31A TECHNOPOLYMER PPS	14,5VA 110V 50/60Hz	VIBIEMME
3	**1120192**	---	1.5	RUBINO	21A TECHNOPOLYMER PPS	16VA 230/240V 50/60Hz	CASADIO 533898300R
3	**1120192**	---	1.5	RUBINO	21A TECHNOPOLYMER PPS	16VA 230/240V 50/60Hz	CIMBALI 533-898-300R
3	**1120192**	---	1.5	RUBINO	21A TECHNOPOLYMER PPS	16VA 230/240V 50/60Hz	FAEMA 533898300R
3	**1120192**	---	1.5	RUBINO	21A TECHNOPOLYMER PPS	16VA 230/240V 50/60Hz	VIBIEMME ELETELE2VBAEV
3	**1120941**	---	1.5	RUBINO	21A TECHNOPOLYMER PPS	8W 24VAC 50/60Hz	CIMBALI 533-893-300R
3	**1120941**	---	1.5	RUBINO	21A TECHNOPOLYMER PPS	8W 24VAC 50/60Hz	FAEMA 533893300R
3	**5080661**	---	2.5	VITON	21A TECHNOPOLYMER PPS	8W 230V 50/60Hz	BFC 5020115
3	**5080661**	---	2.5	VITON	21A TECHNOPOLYMER PPS	8W 230V 50/60Hz	ROYAL 5020115
3	**5080661**	---	2.5	VITON	21A TECHNOPOLYMER PPS	8W 230V 50/60Hz	SCALA C-0403
3	**5501168**	---	3.0	RUBINO	21A TECHNOPOLYMER PPS	8W 24VDC	CASADIO 533899000
3	**5501168**	---	3.0	RUBINO	21A TECHNOPOLYMER PPS	8W 24VDC	RANCILIO 34040027
3	**1120279**	---	3.0	RUBINO	21A TECHNOPOLYMER PPS	15VA 110/120V 50/60Hz	CARIMALI 95.01175.00.42
3	**1120279**	---	3.0	RUBINO	21A TECHNOPOLYMER PPS	15VA 110/120V 50/60Hz	CONTI 470599
3	**1120279**	---	3.0	RUBINO	21A TECHNOPOLYMER PPS	15VA 110/120V 50/60Hz	FAEMA
3	**1120279**	---	3.0	RUBINO	21A TECHNOPOLYMER PPS	15VA 110/120V 50/60Hz	FIAMMA RST
3	**1120279**	---	3.0	RUBINO	21A TECHNOPOLYMER PPS	15VA 110/120V 50/60Hz	FIORENZATO CS
3	**1120279**	---	3.0	RUBINO	21A TECHNOPOLYMER PPS	15VA 110/120V 50/60Hz	GRIMAC
3	**1120279**	---	3.0	RUBINO	21A TECHNOPOLYMER PPS	15VA 110/120V 50/60Hz	RANCILIO
3	**1120279**	---	3.0	RUBINO	21A TECHNOPOLYMER PPS	15VA 110/120V 50/60Hz	RENEKA
4	**1120273**	1/8	2.5	VITON	21A TECHNOPOLYMER PPS	14,5VA 24VAC 50/60Hz	CIMBALI 533-895-100R
4	**1120273**	1/8	2.5	VITON	21A TECHNOPOLYMER PPS	14,5VA 24VAC 50/60Hz	FAEMA 533895100R
4	**1120106**	1/8	3.0	VITON	21A TECHNOPOLYMER PPS	11W 24VDC	CASADIO 533896600R
4	**1120106**	1/8	3.0	VITON	21A TECHNOPOLYMER PPS	11W 24VDC	CIMBALI 533-896-600R
4	**1120106**	1/8	3.0	VITON	21A TECHNOPOLYMER PPS	11W 24VDC	FAEMA 533896600R

ELETTROVALVOLE ODE 3 VIE
SOLENOID VALVES ODE 2 WAYS
MAGNETVENTILE ODE 3 WEGE
ELECTROVÁLVULAS ODE 2 VÍAS

1

2

3

4

Photo	LF Code	Connections (ø)	Orifice (ø)	Seal	Outlet (ø)	Model	Coil type	Suitable for
1	**1120123**	1/8	1.1	VITON	6.6	31A	8W 220/230V 50/60Hz	SAECO 9121.138.00A
1	**1120180**	1/8	1.1	VITON	6.6	31A	8W 24VDC	SAECO 9121.138.00P
2	**1120166**	1/8	1.0	VITON	6.6	31A	8W 220/230V 50/60Hz	LAVAZZA 10063970
3	**1120276**	1/8	2.0	VITON	6.6	31J	7W 24VDC	SAECO 11024039
4	**1120136**	1/8	1.2	VITON	6.6	31J	---	---
4	**1120137**	1/8	2.3	VITON	6.6	31J	---	---

ELETTROVALVOLE ODE 3 VIE
SOLENOID VALVES ODE 2 WAYS
MAGNETVENTILE ODE 3 WEGE
ELECTROVÁLVULAS ODE 2 VÍAS

1

2

3

4

5

Photo	LF Code	Connections (ø)	Orifice (ø)	Seal	Outlet (ø)	Model	Coil type	Suitable for
1	**1120805**	---	1.5	RUBINO	1/8 CONIC	31A	8W 220/230V 50/60Hz	ALL BRANDS - TUTTE LE MARCHE
1	**1120812**	---	1.5	RUBINO	1/8 CONIC	31A	8W 110V 60Hz	ALL BRANDS - TUTTE LE MARCHE
1	**1120810**	---	3.0	VITON	1/8 CONIC	31A	24VAC 50/60Hz	ALL BRANDS - TUTTE LE MARCHE
2	**1120801**	---	1.5	RUBINO	1/8	31A	8W 220/230V 50/60Hz	LAVAZZA 10063303
3	**1120809**	---	1.5	RUBINO	1/8 CONIC	31A	8W 220/230V 50/60Hz	ALL BRANDS - TUTTE LE MARCHE
4	**1120806**	1/8	1.5	RUBINO	1/8 CONIC	31A	8W 220/230V 50/60Hz	NUOVA SIMONELLI 04100009
4	**2102059**	1/8	1.5	VITON	1/8 CONIC	31A	8W 220/230V 50/60Hz	MARZOCCO L100/E
4	**1120202**	1/8	1.5	VITON	1/8 CONIC	31A	8W 24VDC	---
4	**1120278**	1/8	1.5	VITON	1/8 CONIC	31A	8W 110V	MARZOCCO L100/E110.1
4	**1120815**	1/8	3.0	VITON	1/8 CONIC	31A	8W 110V 60Hz	---
4	**1120239**	1/4	3.0	VITON	1/8 CONIC	31A	14,5VA 230/240V 50/60Hz	ASTORIA 18161976
4	**1120239**	1/4	3.0	VITON	1/8 CONIC	31A	14,5VA 230/240V 50/60Hz	WEGA WY18161976
5	**5053805**	1/8	1.2	VITON	1/8	31J	5W 230/240V 50/60Hz	BEZZERA 7702316

BOBINE ODE
COILS ODE
SPULEN ODE
BOBINAS ODE

1

2

Photo	LF Code	Model	Width-height-depth (mm)
1	**1120820**	BDA 8W 220/230V 50/60Hz	30x39x42
1	**1120114**	BDA 8W 24VAC 50Hz	30x39x42
1	**1120112**	BDA 8W 24VDC	30x39x42
1	**3120374**	BDA 8W 24VAC 50/60Hz	30x39x42
1	**1120098**	BDV 11W 24VDC	30x39x42
1	**1120344**	BDV 110/120V 50/60Hz	30x39x42
2	**1120122**	LBA 5W 230V 50Hz	22x29.5x27.5
2	**1120110**	LBA 5W 24VAC 50Hz	22x29.5x27.5
2	**1120120**	RLBA 5W 24VDC	22x29.5x27.5
2	**1120190**	LBA 6W 24VDC	22x29.5x27.5
2	**1120097**	LBV 7W 24VDC	22x29.5x27.5

ELETTROVALVOLE OLAB 2 VIE
SOLENOID VALVES OLAB 2 WAYS
MAGNETVENTILE OLAB 2 WEGE
ELECTROVÁLVULAS OLAB 2 VÍAS

1

2

3

Photo	LF Code	Connections (ø)	Orifice (ø)	Seal	Model	Coil type	Suitable for
1	**1120340**	---	2.0	VITON	5859/B	9VA 230V 50Hz	BRASILIA 09436.4.00.08
2	**1120247**	1/8	2.0	VITON	6000/6	9VA 230V 50Hz	ASTORIA/CMA 18161988
2	**1120247**	1/8	2.0	VITON	6000/6	9VA 230V 50Hz	ORCHESTRALE D18161988
2	**1120247**	1/8	2.0	VITON	6000/6	9VA 230V 50Hz	WEGA WY18161988
3	**5030343**	1/8	2.5	EPDM	6000/4	9/12.5VA 230V 50Hz	SAECO 9121.080.00A

ELETTROVALVOLE OLAB 3 VIE
SOLENOID VALVES OLAB 3 WAYS
MAGNETVENTILE OLAB 3 WEGE
ELECTROVÁLVULAS OLAB 3 VÍAS

1

2

3

4

Photo	LF Code	Connections (ø)	Orifice (ø)	Seal	Outlet (ø)	Model	Coil type	Suitable for
1	**1120004**	---	1.4	VITON	7 mm	8000/7	15VA 220/230V 50Hz	BRASILIA 01984.4.00.08
1	**1120004**	---	1.4	VITON	7 mm	8000/7	15VA 220/230V 50Hz	ISOMAC IS000200
2	**1120187**	1/8	1.5	VITON	7 mm	9000/FZ	9VA 230V 50Hz	PAVONI 0R14210010
2	**1120187**	1/8	1.5	VITON	7 mm	9000/FZ	9VA 230V 50Hz	RDL 14210010
2	**1120107**	1/8	1.5	VITON	7 mm	9000/H	10W 24VDC	---
3	**1120188**	1/8	1.1	VITON	7 mm	9500/HEVT9000	9/12VA 230V 50Hz	SAECO 11011462
4	**1120366**	---	1.4	VITON	7 mm	8000/3	15VA 220/230V 50Hz	GAGGIA DM1645/001

BOBINE OLAB
COILS OLAB
SPULEN OLAB
BOBINAS OLAB

1

Photo	LF Code	Model	Width-height-depth (mm)
1	**1120211**	15VA 220/230V 50Hz	30x39x41
1	**1120195**	19W 24VDC	30x39x41

ELETTROVALVOLE PARKER 2 VIE
SOLENOID VALVES PARKER 2 WAYS
MAGNETVENTILE PARKER 2 WEGE
ELECTROVÁLVULAS PARKER 2 VÍAS

1

2

3

4

5

6

Photo	LF Code	Connections (ø)	Orifice (ø)	Seal	Model	Coil type	Suitable for
1	**1120352**	---	2.5	VITON	VE125CV2	9W 220/230V 50/60Hz	ALL BRANDS - TUTTE LE MARCHE
1	**1120154**	---	2.5	VITON	VE125CV2	9W 110/120V 50/60Hz	ALL BRANDS - TUTTE LE MARCHE
2	**1120700**	1/8	2.5	VITON	VE146FV	9W 220/230V 50/60Hz	ALL BRANDS - TUTTE LE MARCHE
2	**1120155**	1/8	2.5	VITON	VE146V	9W 110/120V 50/60Hz	ALL BRANDS - TUTTE LE MARCHE
2	**1120151**	1/8	3.0	VITON	VE146HV	9W 110/120V 50/60Hz	ALL BRANDS - TUTTE LE MARCHE
2	**1120354**	1/4	2.5	VITON	VE146NV	9W 220/230V 50/60Hz	ALL BRANDS - TUTTE LE MARCHE
2	**1120153**	1/4	3.0	VITON	VE146YV	9W 110/120V 50/60Hz	ALL BRANDS - TUTTE LE MARCHE
2	**1120259**	1/4	4.5	VITON	VE146.3KV	14W 220/230V 50/60Hz	VIBIEMME ELETELE2A2245
3	**1120355**	1/8	2.5	RUBINO	VE1402IR	9W 220/230V 50/60Hz	ALL BRANDS - TUTTE LE MARCHE
3	**5019235**	1/8	2.5	VITON	7121Z	9W 24VAC 50/60Hz	CIMBALI 533-798-400
3	**5019235**	1/8	2.5	VITON	7121Z	9W 24VAC 50/60Hz	FAEMA 533798400
4	**2101493**	1/8	4.0	VITON	VE131	9W 220/230V 50/60Hz	FRACINO FC171
4	**1120246**	1/4	2.2	VITON	VE161.4EV	9W 220/230V 50/60Hz	BIANCHI 25034216
4	**1120246**	1/4	2.2	VITON	VE161.4EV	9W 220/230V 50/60Hz	LAVAZZA 10084193
4	**1120048**	1/4	2.0	VITON	VE161.4QVFOV	9W 220/230V 50Hz	EXPOBAR 60000100
5	**1120010**	1/8	1.5	VITON	746BVRF6	9W 220/230V 50/60Hz	SPAZIALE 00907
6	**5019884**	---	2.0	VITON	175BV	6W 220/230V 50/60Hz	SANREMO 10303080

ELETTROVALVOLE PARKER 3 VIE
SOLENOID VALVES PARKER 3 WAYS
MAGNETVENTILE PARKER 3 WEGE
ELECTROVÁLVULAS PARKER 3 VÍAS

1

2

3

4

5

6

Photo	LF Code	Connections (ø)	Orifice (ø)	Seal	Outlet (ø)	Model	Coil type	Suitable for
1	**1120335**	---	1.3	RUBINO	1/8 CONIC	VE128IR	9W 220/230V 50/60Hz	ALL BRANDS - TUTTE LE MARCHE
1	**1120350**	---	1.3	RUBINO	1/8 CONIC	VE128IR	9W 24VAC 50/60Hz	ALL BRANDS - TUTTE LE MARCHE
1	**1120101**	---	1.3	RUBINO	1/8 CONIC	VE128IR	9W 110/120V 50/60Hz	ALL BRANDS - TUTTE LE MARCHE
2	**1120351**	---	1.3	RUBINO	1/8	VE128GR	9W 220/230V 50/60Hz	BRASILIA - GAGGIA
3	**1120349**	---	1.3	RUBINO	1/8 CONIC	VE128IR	9W 220/230V 50/60Hz	ALL BRANDS - TUTTE LE MARCHE
3	**1120264**	---	---	VITON	1/8 CONIC	VE128IVA.6	9W 220/230V 50/60Hz	EXPOBAR 60000112
4	**1120476**	---	1.3	RUBINO	1/8 CONIC	VE128IR	9W 220/230V 50/60Hz	FUTURMAT 07976608
5	**1120339**	---	1.3	RUBINO	1/8 CONIC	VE128IR	---	ALL BRANDS - TUTTE LE MARCHE
5	**1120439**	---	1.3	VITON	1/8 CONIC	PM128IV	---	ALL BRANDS - TUTTE LE MARCHE
6	**1120265**	---	1.3	RUBINO	1/8	VE128GR	---	BRASILIA - GAGGIA

ELETTROVALVOLE PARKER 3 VIE
SOLENOID VALVES PARKER 3 WAYS
MAGNETVENTILE PARKER 3 WEGE
ELECTROVÁLVULAS PARKER 3 VÍAS

1

2

3

4

Photo	LF Code	Connections (ø)	Orifice (ø)	Seal	Outlet (ø)	Model	Coil type	Suitable for
1	**1120321**	1/8	2.0	VITON	1/8 CONIC	VE141BV	9W 220/230V 50/60Hz	ALL BRANDS - TUTTE LE MARCHE
1	**1120152**	1/8	2.0	VITON	1/8 CONIC	VE141BV	9W 110/120V 50/60Hz	ALL BRANDS - TUTTE LE MARCHE
1	**5039016**	1/8	3.0	VITON	1/8 CONIC	VE141.2YV	9W 220/230V 50/60Hz	CARIMALI 96.00203
1	**5039016**	1/8	3.0	VITON	1/8 CONIC	VE141.2YV	9W 220/230V 50/60Hz	RENEKA 9007411
1	**5069160**	1/4	2.5	VITON	1/8 CONIC	VE141GV	9W 24VAC 50/60Hz	ALL BRANDS - TUTTE LE MARCHE
2	**1120263**	1/8	1.3	VITON	1/8 CONIC	148IV	9W 220/230V 50/60Hz	BEZZERA 7702311
3	**1120088**	1/8	2.0	VITON	7 mm	N79.6QV	6W 220/230V 50/60Hz	ALL BRANDS - TUTTE LE MARCHE
4	**2102097**	---	1.5	VITON	1/8 CONIC	VE108BV	14W 220/230V 50/60Hz	MARZOCCO B.2.004

BOBINE PARKER
COILS PARKER
SPULEN PARKER
BOBINAS PARKER

1

2

3

Photo	LF Code	Model	Width-height-depth (mm)
1	**1120332**	9W 220/230V 50/60Hz	32x38x43
1	**3120032**	ZB09 9W 220/230V 50/60Hz	34x33x43
1	**3120033**	ZB09 9W 24VAC 50/60Hz	34x33x43
1	**1120336**	ZB09 9W 110/120V 50/60Hz	34x33x43
1	**1120009**	ZB12 24VDC 12W	34x33x43
1	**3120471**	ZH14 14W 220/230V 50/60Hz	34x43x33
2	**1120361**	YB09 9W 220/230V 50/60Hz	34x32x42
2	**5037619**	YB09 9W 115V 50/60Hz	34x32x42
3	**1120362**	WB4.5 6W 220/230V 50/60Hz	22x30x32
3	**5500721**	WB4.5 6W 115V 50/60Hz	22x30x32

ELETTROVALVOLE PARKER LIQUIPURE
SOLENOID VALVES PARKER 3 LIQUIPURE
MAGNETVENTILE PARKER LIQUIPURE
ELECTROVÁLVULAS PARKER LIQUIPURE

1

2

3

4

5

6

Photo	LF Code	Connections (ø)	Orifice (ø)	Seal	Outlet (ø)	Model	Coil type	Suitable for
1	**1120750**	---	1.5	RUBINO	1/8 CONIC	3019	9W 220/240V 50/60Hz	SPAZIALE 07694
1	**1120751**	---	1.5	RUBINO	1/8 CONIC	3019	9W 24VAC 50/60Hz	CIMBALI 533-900-400
1	**1120751**	---	1.5	RUBINO	1/8 CONIC	3019	9W 24VAC 50/60Hz	FAEMA 533900400
1	**5075049**	---	1.5	RUBINO	1/8 CONIC	3019	9W 110/115V 50Hz / 120V 60Hz	SANREMO 10305555A
2	**1120701**	---	1.5	RUBINO	---	2019	9W 220/240V 50/60Hz	SANREMO 10303093A
3	**1120558**	---	1.5	RUBINO	1/8 CONIC	3019	---	---
3	**1120562**	---	1.5	VITON	1/8 CONIC	3019	---	---
3	**1120560**	---	2.5	RUBINO	1/8 CONIC	3019	---	---
3	**1120564**	---	2.5	VITON	1/8 CONIC	3019	---	---
4	**1120550**	---	1.5	RUBINO	---	2019	---	---
4	**1120554**	---	1.5	VITON	---	2019	---	---
4	**1120552**	---	2.5	RUBINO	---	2019	---	---
4	**1120556**	---	2.5	VITON	---	2019	---	---
5	**1120541**	1/4	---	---	---	INOX - NSF	---	---
5	**1120540**	1/8	---	---	---	INOX - NSF	---	---
6	**1786221**	---	---	---	---	---	---	---

ELETTROVALVOLE PARKER LIQUIPURE
SOLENOID VALVES PARKER 3 LIQUIPURE
MAGNETVENTILE PARKER LIQUIPURE
ELECTROVÁLVULAS PARKER LIQUIPURE

1

2

3

4

Photo	LF Code	Connections (ø)	Orifice (ø)	Seal	Outlet (ø)	Model	Coil type	Suitable for
1	**1120582**	---	---	---	---	XS03XS	9W 220/240V 50/60Hz	---
1	**1120580**	---	---	---	---	XS03M	9W 24VAC 50/60Hz	---
1	**1120581**	---	---	---	---	XS03XS	9W 110/115/120V 50/60Hz	---
2	**1120583**	---	---	---	---	LAXS6	9W 220/240V 50/60Hz	---
3	**1786221**	---	---	---	---	---	---	---
4	**5034989**	---	---	---	---	M4x8	---	---

ELETTROVALVOLE SIRAI 2 VIE
SOLENOID VALVES SIRAI 2 WAYS
MAGNETVENTILE SIRAI 2 WEGE
ELECTROVÁLVULAS SIRAI 2 VÍAS

1

2

Photo	LF Code	Connections (ø)	Orifice (ø)	Seal	Model	Coil type	Suitable for
1	**1120309**	1/4	2.3	RUBINO	L121C01	9W 230V 50Hz	SPAZIALE 06478
1	**1120316**	1/4	3.2	EPDM	L121D04	9W 230V 50Hz	---
2	**1120308**	1/8	2.3	VITON	L120V02	9W 230V 50Hz	FUTURMAT 07467400

BOBINE SIRAI
COILS SIRAI
SPULEN SIRAI
BOBINAS SIRAI

1

2

Photo	LF Code	Model	Width-height-depth (mm)
1	**1120008**	ZA10AF8 (ZA30A) 9W 230V 50Hz	30x39x41
1	**3120567**	EMZA34AA 14VA 230v 50Hz	30x39x41
1	**3120053**	Z530A 14VA 230V 50Hz	31x43x42
1	**3120054**	Z530A 14VA 24VAC 50Hz	31x43x42
2	**3120042**	Z610A 6W 230V 50/60Hz	25x33x33
2	**3120347**	ZB10A 4W 230V 50/60Hz	22x30x28
2	**3120348**	ZB10A 4W 24VAC 50/60Hz	22x30x28

CONNETTORI ELETTROVALVOLE
COUPLING FOR SOLENOID VALVES
VERBINDER MAGNETVENTILE
CONECTORES ELECTROVÁLVULAS

1

2

Photo	LF Code	For solenoid valves
1	**3120034**	BIG - GRANDI
2	**3120044**	SMALL - PICCOLE

ELETTROVALVOLE DEDICATE
DEDICATED SOLENOID VALVES
STANDMAGNETVENTILE
ELECTROVÁLVULAS DEDICADAS

1

2

3

4

5

6

Photo	LF Code	Power supply	Suitable for	For machine model
1	**1120003**	9W 230V 50Hz	EXPOBAR 60000105	CARAT - DIAMANT - EB61 - ELEN - G10 - MARKUS
2	**5036415**	230V 50/60Hz	GAGGIA 11001543	PLATINUM VOGUE
2	**5036415**	230V 50/60Hz	SAECO 11001543	ODEAGIRO - TALEAGIRO
3	**1120275**	230V 50/60Hz	SAECO 11025742	ROYAL NEW
4	**5061494**	230V 50/60Hz	GAGGIA 20000590	ACCADEMIA - PLATINUM
4	**5061494**	230V 50/60Hz	SAECO 20000590	EXPRELIA - ODEA - ODEA GIRO - TALEA - XELSIS
5	**5032428**	---	GAGGIA 20000591	PLATINUM VISION
5	**5032428**	---	SAECO 20000591	ODEA - ODEA GIRO - TALEA
6	**1120255**	220/240V 50/60Hz	SPINEL SR.000.032.007	DUELUX - DUETTO - DUETTOLUX - ESSE - MINIMINI - RONDOLUX

A worldwide sales organisation to support you wherever you are

www.lfspareparts724.com

FILTRI CAFFE' BARISTAPRO BY LF
COFFEE FILTERS BARISTAPRO BY LF
KAFFEEFILTER BARISTAPRO BY LF
FILTROS CAFÉ BARISTAPRO BY LF

1

2

3

Photo	LF Code	Model	Suitable for	Notes	ø edge - height (H)	N° holes
1	**1460019**	1 CUP - 7/8.5 gr - H21	ASTORIA - FAEMA - MARZOCCO - SIMONELLI - VIBIEMME - WEGA - ECC ...	---	70 - 21	269
1	**1460025**	1 CUP - 8/10 gr - H22.5	ASTORIA - FAEMA - MARZOCCO - SIMONELLI - VIBIEMME - WEGA - ECC ...	---	70 - 22.5	269
1	**1460026**	1 CUP - 10/12 gr - H24	ASTORIA - FAEMA - MARZOCCO - SIMONELLI - VIBIEMME - WEGA - ECC ...	---	70 - 24	269
2	**1460017**	2 CUPS - 15 gr - H22	ASTORIA - FAEMA - MARZOCCO - SIMONELLI - VIBIEMME - WEGA - ECC ...	---	70 - 22	661
2	**1460020**	2 CUPS - 18 gr - H24	ASTORIA - FAEMA - MARZOCCO - SIMONELLI - VIBIEMME - WEGA - ECC ...	---	70 - 24	661
2	**1460021**	2 CUPS - 20 gr - H26	ASTORIA - FAEMA - MARZOCCO - SIMONELLI - VIBIEMME - WEGA - ECC ...	---	70 - 26	661
2	**1460027**	2 CUPS - 22 gr - H28	ASTORIA - FAEMA - MARZOCCO - SIMONELLI - VIBIEMME - WEGA - ECC ...	---	70 - 28	661
3	**1460018**	2 CUPS - 15 gr - H22	ASTORIA - FAEMA - MARZOCCO - SIMONELLI - VIBIEMME - WEGA - ECC ...	NANOTECH	70 - 22	661
3	**1460022**	2 CUPS - 18 gr - H24	ASTORIA - FAEMA - MARZOCCO - SIMONELLI - VIBIEMME - WEGA - ECC ...	NANOTECH	70 - 24	661
3	**1460023**	2 CUPS - 20 gr - H26	ASTORIA - FAEMA - MARZOCCO - SIMONELLI - VIBIEMME - WEGA - ECC ...	NANOTECH	70 - 26	661
3	**1460024**	2 CUPS - 22 gr - H28	ASTORIA - FAEMA - MARZOCCO - SIMONELLI - VIBIEMME - WEGA - ECC ...	NANOTECH	70 - 28	661

Filtri con fori realizzati con un diametro ed un numero preciso specificamente studiato e testato per garantire un'estrazione omogenea
Filters with holes made with a diameter and a precise number specifically studied and tested to ensure homogeneous extraction
Filter mit Löchern, die mit einem Durchmesser und einer präzisen Anzahl spezifisch studiert und getestet sind, um eine homogene Extraktion zu gewährleisten.
Filtros con agujeros de diámetro y un número preciso, estudiados y probados específicamente para garantizar una extracción homogénea.

FILTRI CAFFE' THE SINGLE
COFFEE FILTERS THE SINGLE
KAFFEEFILTER THE SINGLE
FILTROS CAFÉ THE SINGLE

Suitable for	Model	LF Code	ø edge - height (H)	N° holes
CIMBALI	7.5 gr H20.5	**1460305**	68 - 20.5	137
CIMBALI	8.5 gr H21.5	**1460306**	68 - 21.5	137
CIMBALI	10.5 gr H23.0	**1460307**	68 - 23	137
FAEMA	7.5 gr H19.5	**1460300**	70 - 19.5	137
FAEMA	9.5 gr H21.0	**1460301**	70 - 21	137
FAEMA	12 gr H22.5	**1460302**	70 - 22.5	137
MARZOCCO	8 gr H21.5	**1460308**	70 - 21.5	137
MARZOCCO	9 gr H22.5	**1460309**	70 - 22.5	137
MARZOCCO	12 gr H23.5	**1460310**	70 - 23.5	137
NUOVA SIMONELLI	7.5 gr H19.5	**1460300**	70 - 19.5	137
NUOVA SIMONELLI	9.5 gr H21.0	**1460301**	70 - 21	137
NUOVA SIMONELLI	12 gr H22.5	**1460302**	70 - 22.5	137
RANCILIO	7.5 gr H19.5	**1460300**	70 - 19.5	137
RANCILIO	9.5 gr H21.0	**1460301**	70 - 21	137
RANCILIO	12 gr H22.5	**1460302**	70 - 22.5	137
SPAZIALE	7.5 gr H22.5	**1460303**	65 - 22.5	137
SPAZIALE	10 gr H24.5	**1460304**	65 - 24.5	137

Grazie alla bombatura si ottiene uno sfruttamento omogeneo della pastiglia di caffè.
Its rounded shape ensures a uniform brewing from the coffee pod.
Dank der Bombierung erhält man eine gleichartige Ausnutzung der Kaffeetablette.
Gracias a la convexidad se obtiene un aprovechamiento homogéneo de la cápsula de café.

FILTRI ADATTATORI PER CAPSULE EP
ADAPTER FILTER FOR EP PODS
FILTER MIT ADAPTERN FÜR KAFFEEPADS EP
FILTROS ADAPTADORES PARA CÁPSULAS EP

1

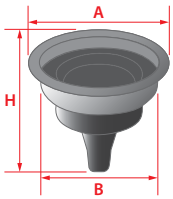

2

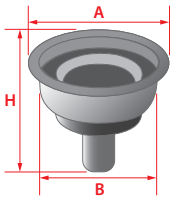

SUPER CREAM

Photo	LF Code	Suitable for	Capsule	LxBxH	Notes
1	**1160104**	ASTORIA CMA - WEGA (52 mm)	SINGLE	65x55x64	---
1	**1160600**	BEZZERA - BRASILIA - EXPOBAR - FAEMA - FIORENZATO CS - GAGGIA - GRIMAC	SINGLE	70x60x68	---
1	**1160600**	MARZOCCO - RANCILIO - SAB ITALIA - SANREMO - SCALA - VIBIEMME - WEGA	SINGLE	70x60x68	---
1	**1160605**	CIMBALI	SINGLE	68x60x65	---
1	**1160607**	RANCILIO	SINGLE	70x60x65	---
1	**1160108**	SAN MARCO - DALLA CORTE	SINGLE	66x56x62	---
1	**1160105**	SAN MARCO	SINGLE	65.5x56x68	LEVA
1	**1160615**	SPAZIALE	SINGLE	65x55x64	---
2	**1460045**	ASTORIA CMA - WEGA (52 mm)	SINGLE	65x55x75	SUPER CREAM
2	**1460046**	SAN MARCO	SINGLE	66x57x73	SUPER CREAM
2	**1460047**	SPAZIALE	SINGLE	65x55x78	SUPER CREAM
2	**5064969**	BFC - BIANCHI - BRASILIA - CONTI - EXPOBAR - FAEMA - FIORENZATO CS	SINGLE	70x60x75	SUPER CREAM
2	**5064969**	FUTURMAT - GRIMAC - ROYAL - SAB ITALIA - SANREMO - VIBIEMME - WEGA	SINGLE	70x60x75	SUPER CREAM
2	**5071383**	ASTORIA - BEZZERA - BRASILIA - CIMBALI - MARZOCCO - NUOVA SIMONELLI	SINGLE	70x60x75	SUPER CREAM
2	**5071383**	PROMAC - RANCILIO - VICTORIA ARDUINO	SINGLE	70x60x75	SUPER CREAM
2	**1460048**	BFC - BIANCHI - BRASILIA - CONTI - EXPOBAR - FAEMA - FIORENZATO CS	DOUBLE	70x60x80	SUPER CREAM
2	**1460048**	FUTURMAT - GRIMAC - ROYAL - SAB ITALIA - SANREMO - VIBIEMME - WEGA	DOUBLE	70x60x80	SUPER CREAM
2	**1460049**	ASTORIA - BRASILIA - BEZZERA - MARZOCCO - NUOVA SIMONELLI	DOUBLE	70x60x80	SUPER CREAM
2	**1460049**	MAGISTER - PAVONI - RANCILIO	DOUBLE	70x60x80	SUPER CREAM

Da abbinare al portafiltro senza fondo specifico per la marca della macchina
For bottomless filter holders specifically used for the machine type
Für Siebträger ohne bestimmten Boden für die Handelsmarke des Geräts
Para acoplar al portafiltro sin fondo específico para la marca de la máquina

FILTRI CAFFE' ASCASO
COFFEE FILTERS ASCASO
KAFFEEFILTER ASCASO
FILTROS CAFÉ ASCASO

1

2

3

4

5

6

Photo	LF Code	Model	Suitable for	Notes	ø edge - height (H)
1	**1460038**	1 CUP - 7 gr	I..279	DREAM PM (+04/2015) - BASIC PM (+04/2015)	64 - 20.5
2	**1460035**	1 CUP - 7 gr - SUPERCREMA	I.2683	DREAM PM (+04/2015) - BASIC PM (+04/2015)	64 - 19
2	**1460036**	2 CUPS - 14 gr - SUPERCREMA	I.2682	DREAM PM (+04/2015) - BASIC PM (+04/2015)	64 - 24
3	**1460037**	POD 2 CUPS	I.2635	DREAM PM (+04/2015) - BASIC PM (+04/2015)	64 - 19
4	**5037633**	1 CUP - SUPERCREMA	I..701	BASIC - ARC - DREAM - ELIPSE	64 - 21.5
4	**1460034**	2 CUPS - SUPERCREMA	I..702	BASIC - ARC - DREAM - ELIPSE	64 - 26
2	**1460039**	2 CUPS - 14 gr	I..280	BASIC - ARC - DREAM - ELIPSE	64 - 23
5	**5037634**	POD 1 CUP	I...64	BASIC - ARC - DREAM - ELIPSE	64 - 10
6	**1460040**	BLIND - CIECO	I..336	BASIC - ARC - DREAM - ELIPSE	64 - 19.5

FILTRI CAFFE' ASTORIA/CMA
COFFEE FILTERS ASTORIA/CMA
KAFFEEFILTER ASTORIA/CMA
FILTROS CAFÉ ASTORIA/CMA

1 2 3 4 5

Photo	LF Code	Model	Suitable for	Notes	ø edge - height (H)
1	**1160050**	1 CUP - 6 gr	ASTORIA/CMA 27146	---	70 - 19.5
1	**1160052**	1 CUP - 7 gr	ASTORIA/CMA 27142	---	70 - 24.5
2	**1160529**	2 CUPS - 12 gr	ASTORIA/CMA 27121 - 27176	---	70 - 22
2	**1160053**	2 CUPS - 14 gr	ASTORIA/CMA 27171	---	70 - 24.5
3	**1160345**	2 CUPS - 18 gr	ASTORIA/CMA 27190	---	70 - 28
4	**1160339**	BLIND - CIECO	ASTORIA/CMA 27173	---	70 - 17
1	**1160276**	1 CUP - 7 gr	ASTORIA/CMA 27144000	PLUS4YOU	65 - 25
2	**1160277**	2 CUPS - 14 gr	ASTORIA/CMA 27175000	PLUS4YOU	65 - 27.5
4	**1160278**	BLIND - CIECO	ASTORIA/CMA 27175001	PLUS4YOU	65 - 25
5	**1160503**	POD 1 CUP	ASTORIA/CMA	---	70 - 17
5	**1160504**	POD 2 CUPS	ASTORIA/CMA	---	70 - 21.5

FILTRI CAFFE' ASTORIA/CMA "DI PRECISIONE"
PRECISION COFFEE FILTERS ASTORIA/CMA
PRÄZISIONSSIEBE ASTORIA/CMA
FILTROS CAFÉ DE PRECISIÓN ASTORIA/CMA

1 2 3 4 - ULTRAFINE

Photo	LF Code	Model	Suitable for	Notes	ø edge - height (H)	N° holes
1	**1460100**	1 CUP - 6/8 gr - H24.5	ASTORIA/CMA	---	70 - 24.5	177
1	**1460101**	1 CUP - 7/9 gr - H26.5	ASTORIA/CMA	---	70 - 26.5	253
2	**1460102**	2 CUPS - 12/18 gr - H24.5	ASTORIA/CMA	---	70 - 24.5	641
2	**1460103**	2 CUPS - 14/20 gr - H26.5	ASTORIA/CMA	---	70 - 26.5	641
3	**1460113**	2 CUPS - 12/18 gr - H24	ASTORIA/CMA	---	70 - 24	715
3	**1460114**	2 CUPS - 16/20 gr - H26	ASTORIA/CMA	---	70 - 26	715
3	**1460104**	3 CUPS - 18/22 gr - H28.5	ASTORIA/CMA	---	70 - 28.5	715
1	**1460110**	1 CUP - 6/9 gr - H25	ASTORIA/CMA	PLUS4YOU	65 - 25	253
2	**1460111**	2 CUPS - 12/18 gr - H27.5	ASTORIA/CMA	PLUS4YOU	65 - 27.5	641
3	**1460112**	3 CUPS - 21 gr - H32	ASTORIA/CMA	PLUS4YOU	65 - 32	641
4	**1460400**	2 CUPS - 12/18 gr - H24	ASTORIA/CMA	ULTRAFINE MEMBRANE	70 - 24	565
4	**1460401**	2 CUPS - 14/20 gr - H26	ASTORIA/CMA	ULTRAFINE MEMBRANE	70 - 26	565
4	**1460402**	2 CUPS - 18/22 gr - H28	ASTORIA/CMA	ULTRAFINE MEMBRANE	70 - 28	565

Filtri progettati per ottenere la perfetta estrazione del caffè , acciaio Aisi 316 , certificati alimentare
Filters designed to obtain a perfect coffee brewing, Aisi 316 steel, food safe
Diese Siebe wurden für die perfekte Kaffeeextraktion hergestellt, Stahl Aisi 316, lebensmitteltauglich-zertifiziert
Filtros planeados para obtener la perfecta extracción del café, acero Aisi 316, certificados uso alimentario

FILTRI CAFFE' AZKOYEN
COFFEE FILTERS AZKOYEN
KAFFEEFILTER AZKOYEN
FILTROS CAFÉ AZKOYEN

1

2

3

Photo	LF Code	Model	Suitable for	Notes	ø edge - height (H)
1	**1160251**	1 CUP - 6 gr	AZKOYEN	---	70 - 20.5
1	**1160335**	1 CUP - 7 gr	AZKOYEN	---	70 - 24.5
2	**1160252**	2 CUPS - 12 gr	AZKOYEN	---	70 - 21
2	**1160337**	2 CUPS - 14 gr	AZKOYEN	---	70 - 24.5
1	**1160281**	1 CUP - 7 gr	AZKOYEN	AISI 430 ECONOMIC	70 - 24.5
2	**1160282**	2 CUPS - 14 gr	AZKOYEN	AISI 430 ECONOMIC	70 - 25
3	**1160339**	BLIND - CIECO	AZKOYEN	---	70 - 17

FILTRI CAFFE' BEZZERA
COFFEE FILTERS BEZZERA
KAFFEEFILTER BEZZERA
FILTROS CAFÉ BEZZERA

1

2

3

4

5

Photo	LF Code	Model	Suitable for	Notes	ø edge - height (H)
1	**1160251**	1 CUP - 6 gr	BEZZERA 5471004 / 5471010 / 5471020 / 5471023	---	70 - 20.5
1	**1160335**	1 CUP - 7 gr	BEZZERA 5471011 / 5471024	---	70 - 24.5
2	**1160252**	2 CUPS - 12 gr	BEZZERA 5471005 / 5471007 / 5471021	---	70 - 21
2	**1160337**	2 CUPS - 14 gr	BEZZERA 5471009 / 5471016 / 5471026	---	70 - 24.5
1	**1160281**	1 CUP - 7 gr	BEZZERA	AISI 430 ECONOMIC	70 - 24.5
2	**1160282**	2 CUPS - 14 gr	BEZZERA	AISI 430 ECONOMIC	70 - 25
3	**1160339**	BLIND - CIECO	BEZZERA 5471003	---	70 - 17
4	**5040051**	1 CUP - HOBBY	BEZZERA 5471014	---	64 - 22
4	**5054194**	2 CUPS - HOBBY	BEZZERA 5471015	---	64 - 22.5
5	**1160504**	POD 2 CUPS	BEZZERA 5471214	---	70 - 21.5

FILTRI CAFFE' BEZZERA "DI PRECISIONE"
PRECISION COFFEE FILTERS BEZZERA
PRÄZISIONSSIEBE BEZZERA
FILTROS CAFÉ DE PRECISIÓN BEZZERA

1

2

3

4 - ULTRAFINE

Photo	LF Code	Model	Suitable for	Notes	ø edge - height (H)	N° holes
1	**1460100**	1 CUP - 6/8 gr - H24.5	BEZZERA	---	70 - 24.5	177
1	**1460101**	1 CUP - 7/9 gr - H26.5	BEZZERA	---	70 - 26.5	253
2	**1460102**	2 CUPS - 12/18 gr - H24.5	BEZZERA	---	70 - 24.5	641
2	**1460103**	2 CUPS - 14/20 gr - H26.5	BEZZERA	---	70 - 26.5	641
3	**1460113**	2 CUPS - 12/18 gr - H24	BEZZERA	---	70 - 24	715
3	**1460114**	2 CUPS - 16/20 gr - H26	BEZZERA	---	70 - 26	715
3	**1460104**	3 CUPS - 18/22 gr - H28.5	BEZZERA	---	70 - 28.5	715
4	**1460400**	2 CUPS - 12/18 gr - H24	BEZZERA	ULTRAFINE MEMBRANE	70 - 24	565
4	**1460401**	2 CUPS - 14/20 gr - H26	BEZZERA	ULTRAFINE MEMBRANE	70 - 26	565
4	**1460402**	2 CUPS - 18/22 gr - H28	BEZZERA	ULTRAFINE MEMBRANE	70 - 28	565

Filtri progettati per ottenere la perfetta estrazione del caffè , acciaio Aisi 316 , certificati alimentare
Filters designed to obtain a perfect coffee brewing, Aisi 316 steel, food safe
Diese Siebe wurden für die perfekte Kaffeeextraktion hergestellt, Stahl Aisi 316, lebensmitteltauglich-zertifiziert
Filtros planeados para obtener la perfecta extracción del café, acero Aisi 316, certificados uso alimentario

FILTRI CAFFE' BFC
COFFEE FILTERS BFC
KAFFEEFILTER BFC
FILTROS CAFÉ BFC

1

2

3

Photo	LF Code	Model	Suitable for	Notes	ø edge - height (H)
1	**1160251**	1 CUP - 6 gr	BFC	---	70 - 20.5
1	**1160335**	1 CUP - 7 gr	BFC 4630051	---	70 - 24.5
1	**1160025**	1 CUP - 7 gr	BFC 4630070	CLASSICA LEVA	70 - 27
2	**1160252**	2 CUPS - 12 gr	BFC	---	70 - 21
2	**1160337**	2 CUPS - 14 gr	BFC 4630052	---	70 - 24.5
2	**1160345**	2 CUPS - 18 gr	BFC 4630078	CLASSICA LEVA	70 - 28
1	**1160281**	1 CUP - 7 gr	BFC	AISI 430 ECONOMIC	70 - 24.5
2	**1160282**	2 CUPS - 14 gr	BFC	AISI 430 ECONOMIC	70 - 25
3	**1160339**	BLIND - CIECO	BFC 4630100	---	70 - 17

FILTRI CAFFE' BFC "DI PRECISIONE"
PRECISION COFFEE FILTERS BFC
PRÄZISIONSSIEBE BFC
FILTROS CAFÉ DE PRECISIÓN BFC

1

2

3

4 - ULTRAFINE

Photo	LF Code	Model	Suitable for	Notes	ø edge - height (H)	N° holes
1	**1460100**	1 CUP - 6/8 gr - H24.5	BFC	---	70 - 24.5	177
1	**1460101**	1 CUP - 7/9 gr - H26.5	BFC	---	70 - 26.5	253
2	**1460102**	2 CUPS - 12/18 gr - H24.5	BFC	---	70 - 24.5	641
2	**1460103**	2 CUPS - 14/20 gr - H26.5	BFC	---	70 - 26.5	641
3	**1460113**	2 CUPS - 12/18 gr - H24	BFC	---	70 - 24	715
3	**1460114**	2 CUPS - 16/20 gr - H26	BFC	---	70 - 26	715
3	**1460104**	3 CUPS - 18/22 gr - H28.5	BFC	---	70 - 28.5	715
4	**1460400**	2 CUPS - 12/18 gr - H24	BFC	ULTRAFINE MEMBRANE	70 - 24	565
4	**1460401**	2 CUPS - 14/20 gr - H26	BFC	ULTRAFINE MEMBRANE	70 - 26	565
4	**1460402**	2 CUPS - 18/22 gr - H28	BFC	ULTRAFINE MEMBRANE	70 - 28	565

Filtri progettati per ottenere la perfetta estrazione del caffè , acciaio Aisi 316 , certificati alimentare
Filters designed to obtain a perfect coffee brewing, Aisi 316 steel, food safe
Diese Siebe wurden für die perfekte Kaffeeextraktion hergestellt, Stahl Aisi 316, lebensmitteltauglich-zertifiziert
Filtros planeados para obtener la perfecta extracción del café, acero Aisi 316, certificados uso alimentario

FILTRI CAFFE' BIANCHI
COFFEE FILTERS BIANCHI
KAFFEEFILTER BIANCHI
FILTROS CAFÉ BIANCHI

1

2

3

4

Photo	LF Code	Model	Suitable for	Notes	ø edge - height (H)
1	**1160251**	1 CUP - 6 gr	BIANCHI 16022811	---	70 - 20.5
1	**1160335**	1 CUP - 7 gr	BIANCHI	---	70 - 24.5
2	**1160252**	2 CUPS - 12 gr	BIANCHI 16022911	---	70 - 21
2	**1160337**	2 CUPS - 14 gr	BIANCHI	---	70 - 24.5
1	**1160281**	1 CUP - 7 gr	BIANCHI	AISI 430 ECONOMIC	70 - 24.5
2	**1160282**	2 CUPS - 14 gr	BIANCHI	AISI 430 ECONOMIC	70 - 25
3	**1160339**	BLIND - CIECO	BIANCHI	---	70 - 17
4	**1160293**	BLIND - CIECO	BIANCHI 05257215	---	50

FILTRI CAFFE' BIANCHI "DI PRECISIONE"
PRECISION COFFEE FILTERS BIANCHI
PRÄZISIONSSIEBE BIANCHI
FILTROS CAFÉ DE PRECISIÓN BIANCHI

1

2

3

4 - ULTRAFINE

Photo	LF Code	Model	Suitable for	Notes	ø edge - height (H)	N° holes
1	**1460100**	1 CUP - 6/8 gr - H24.5	BIANCHI	---	70 - 24.5	177
1	**1460101**	1 CUP - 7/9 gr - H26.5	BIANCHI	---	70 - 26.5	253
2	**1460102**	2 CUPS - 12/18 gr - H24.5	BIANCHI	---	70 - 24.5	641
2	**1460103**	2 CUPS - 14/20 gr - H26.5	BIANCHI	---	70 - 26.5	641
3	**1460113**	2 CUPS - 12/18 gr - H24	BIANCHI	---	70 - 24	715
3	**1460114**	2 CUPS - 16/20 gr - H26	BIANCHI	---	70 - 26	715
3	**1460104**	3 CUPS - 18/22 gr - H28.5	BIANCHI	---	70 - 28.5	715
4	**1460400**	2 CUPS - 12/18 gr - H24	BIANCHI	ULTRAFINE MEMBRANE	70 - 24	565
4	**1460401**	2 CUPS - 14/20 gr - H26	BIANCHI	ULTRAFINE MEMBRANE	70 - 26	565
4	**1460402**	2 CUPS - 18/22 gr - H28	BIANCHI	ULTRAFINE MEMBRANE	70 - 28	565

Filtri progettati per ottenere la perfetta estrazione del caffè , acciaio Aisi 316 , certificati alimentare
Filters designed to obtain a perfect coffee brewing, Aisi 316 steel, food safe
Diese Siebe wurden für die perfekte Kaffeeextraktion hergestellt, Stahl Aisi 316, lebensmitteltauglich-zertifiziert
Filtros planeados para obtener la perfecta extracción del café, acero Aisi 316, certificados uso alimentario

FILTRI CAFFE' BRASILIA
COFFEE FILTERS BRASILIA
KAFFEEFILTER BRASILIA
FILTROS CAFÉ BRASILIA

1

2

3

4

Photo	LF Code	Model	Suitable for	Notes	ø edge - height (H)
1	**1160251**	1 CUP - 6 gr	BRASILIA 01702.0.40.01	---	70 - 20.5
1	**1160335**	1 CUP - 7 gr	BRASILIA 00560.0.40.01	---	70 - 24.5
2	**1160252**	2 CUPS - 12 gr	BRASILIA 01703.0.40.01	---	70 - 21
2	**1160337**	2 CUPS - 14 gr	BRASILIA 00561.0.40.01	---	70 - 24.5
1	**1160281**	1 CUP - 7 gr	BRASILIA	AISI 430 ECONOMIC	70 - 24.5
2	**1160282**	2 CUPS - 14 gr	BRASILIA	AISI 430 ECONOMIC	70 - 25
3	**1160339**	BLIND - CIECO	BRASILIA 00564.0.40.01	---	70 - 17
4	**1160503**	POD 1 CUP	BRASILIA	---	70 - 17
4	**1160504**	POD 2 CUPS	BRASILIA	---	70 - 21.5

FILTRI CAFFE' BRASILIA "DI PRECISIONE"
PRECISION COFFEE FILTERS BRASILIA
PRÄZISIONSSIEBE BRASILIA
FILTROS CAFÉ DE PRECISIÓN BRASILIA

1

2

3

4 - ULTRAFINE

Photo	LF Code	Model	Suitable for	Notes	ø edge - height (H)	N° holes
1	**1460100**	1 CUP - 6/8 gr - H24.5	BRASILIA	---	70 - 24.5	177
1	**1460101**	1 CUP - 7/9 gr - H26.5	BRASILIA	---	70 - 26.5	253
2	**1460102**	2 CUPS - 12/18 gr - H24.5	BRASILIA	---	70 - 24.5	641
2	**1460103**	2 CUPS - 14/20 gr - H26.5	BRASILIA	---	70 - 26.5	641
3	**1460113**	2 CUPS - 12/18 gr - H24	BRASILIA	---	70 - 24	715
3	**1460114**	2 CUPS - 16/20 gr - H26	BRASILIA	---	70 - 26	715
3	**1460104**	3 CUPS - 18/22 gr - H28.5	BRASILIA	---	70 - 28.5	715
4	**1460400**	2 CUPS - 12/18 gr - H24	BRASILIA	ULTRAFINE MEMBRANE	70 - 24	565
4	**1460401**	2 CUPS - 14/20 gr - H26	BRASILIA	ULTRAFINE MEMBRANE	70 - 26	565
4	**1460402**	2 CUPS - 18/22 gr - H28	BRASILIA	ULTRAFINE MEMBRANE	70 - 28	565

Filtri progettati per ottenere la perfetta estrazione del caffè , acciaio Aisi 316 , certificati alimentare
Filters designed to obtain a perfect coffee brewing, Aisi 316 steel, food safe
Diese Siebe wurden für die perfekte Kaffeeextraktion hergestellt, Stahl Aisi 316, lebensmitteltauglich-zertifiziert
Filtros planeados para obtener la perfecta extracción del café, acero Aisi 316, certificados uso alimentario

FILTRI CAFFE' BRUGNETTI-AURORA
COFFEE FILTERS BRUGNETTI-AURORA
KAFFEEFILTER BRUGNETTI-AURORA
FILTROS CAFÉ BRUGNETTI-AURORA

1

2

3

Photo	LF Code	Model	Suitable for	Notes	ø edge - height (H)
1	**1160251**	1 CUP - 6 gr	BRUGNETTI-AURORA 000033.1	---	70 - 20.5
1	**1160335**	1 CUP - 7 gr	BRUGNETTI-AURORA	---	70 - 24.5
2	**1160252**	2 CUPS - 12 gr	BRUGNETTI-AURORA 000033.2	---	70 - 21
2	**1160337**	2 CUPS - 14 gr	BRUGNETTI-AURORA	---	70 - 24.5
1	**1160281**	1 CUP - 7 gr	BRUGNETTI-AURORA	AISI 430 ECONOMIC	70 - 24.5
2	**1160282**	2 CUPS - 14 gr	BRUGNETTI-AURORA	AISI 430 ECONOMIC	70 - 25
3	**1160339**	BLIND - CIECO	BRUGNETTI-AURORA 000034	---	70 - 17

FILTRI CAFFE' CARIMALI
COFFEE FILTERS CARIMALI
KAFFEEFILTER CARIMALI
FILTROS CAFÉ CARIMALI

1

2

3

Photo	LF Code	Model	Suitable for	Notes	ø edge - height (H)
1	**1160055**	1 CUP - 7 gr	CARIMALI 14.00768 / 14.00768.30	---	68 - 24.5
2	**1160056**	2 CUPS - 14 gr	CARIMALI 14.00769 / 14.00769.30	---	68 - 24
3	**1160293**	BLIND EPDM - CIECO IN EPDM	CARIMALI 87.00104	---	50

FILTRI CAFFE' CARIMALI "DI PRECISIONE"
PRECISION COFFEE FILTERS CARIMALI
PRÄZISIONSSIEBE CARIMALI
FILTROS CAFÉ DE PRECISIÓN CARIMALI

1

2

3

Photo	LF Code	Model	Suitable for	Notes	ø edge - height (H)	N° holes
1	**1460105**	1 CUP - 6/9 gr - H24.5	CARIMALI	---	68 - 24.5	253
2	**1460106**	2 CUPS - 12/18 gr - H24.5	CARIMALI	---	68 - 24.5	641
3	**1460107**	2 CUPS - 16/22 gr - H26.5	CARIMALI	---	68 - 26.5	715

Filtri progettati per ottenere la perfetta estrazione del caffè , acciaio Aisi 316 , certificati alimentare
Filters designed to obtain a perfect coffee brewing, Aisi 316 steel, food safe
Diese Siebe wurden für die perfekte Kaffeeextraktion hergestellt, Stahl Aisi 316, lebensmitteltauglich-zertifiziert
Filtros planeados para obtener la perfecta extracción del café, acero Aisi 316, certificados uso alimentario

FILTRI CAFFE' CASADIO
COFFEE FILTERS CASADIO
KAFFEEFILTER CASADIO
FILTROS CAFÉ CASADIO

1

2

3

Photo	LF Code	Model	Suitable for	Notes	ø edge - height (H)
1	**1160251**	1 CUP - 6 gr	CASADIO 457367000	---	70 - 20.5
1	**1160335**	1 CUP - 7 gr	CASADIO 457368000	---	70 - 24.5
2	**1160252**	2 CUPS - 12 gr	CASADIO	---	70 - 21
2	**1160337**	2 CUPS - 14 gr	CASADIO 457369000	---	70 - 24.5
1	**1160281**	1 CUP - 7 gr	CASADIO	AISI 430 ECONOMIC	70 - 24.5
2	**1160282**	2 CUPS - 14 gr	CASADIO	AISI 430 ECONOMIC	70 - 25
3	**1160293**	BLIND EPDM - CIECO IN EPDM	CASADIO 457058000	---	50

FILTRI CAFFE' CASADIO "DI PRECISIONE"
PRECISION COFFEE FILTERS CASADIO
PRÄZISIONSSIEBE CASADIO
FILTROS CAFÉ DE PRECISIÓN CASADIO

1

2

3

4 - ULTRAFINE

Photo	LF Code	Model	Suitable for	Notes	ø edge - height (H)	N° holes
1	**1460100**	1 CUP - 6/8 gr - H24.5	CASADIO	---	70 - 24.5	177
1	**1460101**	1 CUP - 7/9 gr - H26.5	CASADIO	---	70 - 26.5	253
2	**1460102**	2 CUPS - 12/18 gr - H24.5	CASADIO	---	70 - 24.5	641
2	**1460103**	2 CUPS - 14/20 gr - H26.5	CASADIO	---	70 - 26.5	641
3	**1460113**	2 CUPS - 12/18 gr - H24	CASADIO	---	70 - 24	715
3	**1460114**	2 CUPS - 16/20 gr - H26	CASADIO	---	70 - 26	715
3	**1460104**	3 CUPS - 18/22 gr - H28.5	CASADIO	---	70 - 28.5	715
4	**1460400**	2 CUPS - 12/18 gr - H24	CASADIO	ULTRAFINE MEMBRANE	70 - 24	565
4	**1460401**	2 CUPS - 14/20 gr - H26	CASADIO	ULTRAFINE MEMBRANE	70 - 26	565
4	**1460402**	2 CUPS - 18/22 gr - H28	CASADIO	ULTRAFINE MEMBRANE	70 - 28	565

Filtri progettati per ottenere la perfetta estrazione del caffè , acciaio Aisi 316 , certificati alimentare
Filters designed to obtain a perfect coffee brewing, Aisi 316 steel, food safe
Diese Siebe wurden für die perfekte Kaffeeextraktion hergestellt, Stahl Aisi 316, lebensmitteltauglich-zertifiziert
Filtros planeados para obtener la perfecta extracción del café, acero Aisi 316, certificados uso alimentario

FILTRI CAFFE' CIMBALI
COFFEE FILTERS CIMBALI
KAFFEEFILTER CIMBALI
FILTROS CAFÉ CIMBALI

1

2

3

4

Photo	LF Code	Model	Suitable for	Notes	ø edge - height (H)
1	**1160257**	1 CUP - 6 gr	CIMBALI 457-249-000 / 457-249-010	---	68 - 22.5
1	**1160085**	1 CUP - 6 gr	CIMBALI 457-232-000	---	68 - 18
1	**1160266**	1 CUP - 7 gr	CIMBALI 457-163-000	---	68 - 24
1	**1160335**	1 CUP - 7 gr	CIMBALI 457-368-000	M27 2008	70 - 24.5
2	**1160086**	2 CUPS - 12 gr	CIMBALI 457-234-000	---	68 - 19
2	**1160267**	2 CUPS - 12 gr	CIMBALI 457-233-000	---	68 - 22
2	**1160258**	2 CUPS - 14 gr	CIMBALI 457-164-000 / 458-171-000	---	68 - 25
2	**1160337**	2 CUPS - 14 gr	CIMBALI 457-369-000	M27 2008	70 - 24.5
3	**1160293**	BLIND EPDM - CIECO IN EPDM	CIMBALI 457-058-000	---	50
4	**1160506**	POD 1 CUP	CIMBALI 457-313-000	---	68 - 18.5

FILTRI CAFFE' CIMBALI "DI PRECISIONE"
PRECISION COFFEE FILTERS CIMBALI
PRÄZISIONSSIEBE CIMBALI
FILTROS CAFÉ DE PRECISIÓN CIMBALI

1

2

3

4

Photo	LF Code	Model	Suitable for	Notes	ø edge - height (H)	N° holes
1	**1460105**	1 CUP - 6/9 gr - H24.5	CIMBALI	---	68 - 24.5	253
2	**1460106**	2 CUPS - 12/18 gr - H24.5	CIMBALI	---	68 - 24.5	641
3	**1460107**	2 CUPS - 16/22 gr - H26.5	CIMBALI	---	68 - 26.5	715
4	**1460305**	1 CUP - 7.5 gr - H20.5	CIMBALI	---	68 - 20.5	137
4	**1460306**	1 CUP - 8.5 gr - H21.5	CIMBALI	---	68 - 21.5	137
4	**1460307**	1 CUP - 10.5 gr - H23	CIMBALI	---	68 - 23	137

Filtri progettati per ottenere la perfetta estrazione del caffè , acciaio Aisi 316 , certificati alimentare
Filters designed to obtain a perfect coffee brewing, Aisi 316 steel, food safe
Diese Siebe wurden für die perfekte Kaffeeextraktion hergestellt, Stahl Aisi 316, lebensmitteltauglich-zertifiziert
Filtros planeados para obtener la perfecta extracción del café, acero Aisi 316, certificados uso alimentario

FILTRI CAFFE' CONTI
COFFEE FILTERS CONTI
KAFFEEFILTER CONTI
FILTROS CAFÉ CONTI

1

2

3

Photo	LF Code	Model	Suitable for	Notes	ø edge - height (H)
1	**1160251**	1 CUP - 6 gr	CONTI 016840	---	70 - 20.5
1	**1160335**	1 CUP - 7 gr	CONTI 016840	---	70 - 24.5
2	**1160252**	2 CUPS - 12 gr	CONTI 016780	---	70 - 21
2	**1160337**	2 CUPS - 14 gr	CONTI 016700	---	70 - 24.5
2	**1160345**	2 CUPS - 18 gr	CONTI 27190	---	70 - 28
2	**1160028**	3 CUPS - 23 gr	CONTI 227800	---	70 - 30
1	**1160281**	1 CUP - 7 gr	CONTI	AISI 430 ECONOMIC	70 - 24.5
2	**1160282**	2 CUPS - 14 gr	CONTI	AISI 430 ECONOMIC	70 - 25
3	**1160339**	BLIND - CIECO	CONTI	---	70 - 17

FILTRI CAFFE' CONTI "DI PRECISIONE"
PRECISION COFFEE FILTERS CONTI
PRÄZISIONSSIEBE CONTI
FILTROS CAFÉ DE PRECISIÓN CONTI

1

2

3

4 - ULTRAFINE

Photo	LF Code	Model	Suitable for	Notes	ø edge - height (H)	N° holes
1	**1460100**	1 CUP - 6/8 gr - H24.5	CONTI	---	70 - 24.5	177
1	**1460101**	1 CUP - 7/9 gr - H26.5	CONTI	---	70 - 26.5	253
2	**1460102**	2 CUPS - 12/18 gr - H24.5	CONTI	---	70 - 24.5	641
2	**1460103**	2 CUPS - 14/20 gr - H26.5	CONTI	---	70 - 26.5	641
3	**1460113**	2 CUPS - 12/18 gr - H24	CONTI	---	70 - 24	715
3	**1460114**	2 CUPS - 16/20 gr - H26	CONTI	---	70 - 26	715
3	**1460104**	3 CUPS - 18/22 gr - H28.5	CONTI	---	70 - 28.5	715
4	**1460400**	2 CUPS - 12/18 gr - H24	CONTI	ULTRAFINE MEMBRANE	70 - 24	565
4	**1460401**	2 CUPS - 14/20 gr - H26	CONTI	ULTRAFINE MEMBRANE	70 - 26	565
4	**1460402**	2 CUPS - 18/22 gr - H28	CONTI	ULTRAFINE MEMBRANE	70 - 28	565

Filtri progettati per ottenere la perfetta estrazione del caffè , acciaio Aisi 316 , certificati alimentare
Filters designed to obtain a perfect coffee brewing, Aisi 316 steel, food safe
Diese Siebe wurden für die perfekte Kaffeeextraktion hergestellt, Stahl Aisi 316, lebensmitteltauglich-zertifiziert
Filtros planeados para obtener la perfecta extracción del café, acero Aisi 316, certificados uso alimentario

FILTRI CAFFE' DALLA CORTE
COFFEE FILTERS DALLA CORTE
KAFFEEFILTER DALLA CORTE
FILTROS CAFÉ DALLA CORTE

1

2

3

Photo	LF Code	Model	Suitable for	Notes	ø edge - height (H)
1	**1160033**	1 CUP - 6 gr	DALLA CORTE	---	66 - 21
1	**1160273**	1 CUP - 7 gr	DALLA CORTE	---	66 - 22
2	**1160044**	2 CUPS - 9 gr	DALLA CORTE B-MC-0040	---	66 - 25
2	**1160133**	2 CUPS - 12 gr	DALLA CORTE	---	66 - 24
2	**1160274**	2 CUPS - 16 gr	DALLA CORTE B-MC-0041	---	66 - 26.4
2	**1160045**	2 CUPS - 18 gr	DALLA CORTE	---	66 - 28.5
3	**1160287**	BLIND - CIECO	DALLA CORTE B-MC-0224	---	66 - 22

FILTRI CAFFE' DALLA CORTE "DI PRECISIONE"
PRECISION COFFEE FILTERS DALLA CORTE
PRÄZISIONSSIEBE DALLA CORTE
FILTROS CAFÉ DE PRECISIÓN DALLA CORTE

1

2

3

Photo	LF Code	Model	Suitable for	Notes	ø edge - height (H)	N° holes
1	**1460108**	1 CUP - 6/9 gr - H25	DALLA CORTE	---	66 - 25	293
2	**1460109**	2 CUPS - 14/18 gr - H26	DALLA CORTE	---	66 - 26	641
3	**1460115**	2 CUPS - 18/20 gr - H32	DALLA CORTE	---	66 - 32	641

Filtri progettati per ottenere la perfetta estrazione del caffè , acciaio Aisi 316 , certificati alimentare
Filters designed to obtain a perfect coffee brewing, Aisi 316 steel, food safe
Diese Siebe wurden für die perfekte Kaffeeextraktion hergestellt, Stahl Aisi 316, lebensmitteltauglich-zertifiziert
Filtros planeados para obtener la perfecta extracción del café, acero Aisi 316, certificados uso alimentario

FILTRI CAFFE' DELONGHI
COFFEE FILTERS DELONGHI
KAFFEESIEBE DELONGHI
FILTROS CAFÉ DELONGHI

1

2

3

4

5

6

Photo	LF Code	Model	Suitable for	Notes	ø edge - height (H)
1	**1160078**	1 CUP - CREMADISK	DELONGHI 7332173700	---	62 - 33
2	**1160079**	2 CUPS - CREMADISK	DELONGHI 7332173800	---	62 - 37.5
3	**5059582**	CREMADISK	DELONGHI 7313285859	---	48
4	**5059583**	CREMADISK	DELONGHI 7313285889	---	---
5	**1460015**	1 CUP	DELONGHI 5513200809	---	61.5 - 21
6	**1460014**	2 CUPS	DELONGHI 7313285839	---	61.5 - 26.5

FILTRI CAFFE' ECM
COFFEE FILTERS ECM
KAFFEESIEBE ECM
FILTROS CAFÉ ECM

1

2

3

Photo	LF Code	Model	Suitable for	Notes	ø edge - height (H)
1	**1160251**	1 CUP - 6 gr	ECM C619900669	---	70 - 20.5
1	**1160335**	1 CUP - 7 gr	ECM C619900104	---	70 - 24.5
2	**1160252**	2 CUPS - 12 gr	ECM C629900670	---	70 - 21
2	**1160337**	2 CUPS - 14 gr	ECM C619900105	---	70 - 24.5
2	**1160345**	2 CUPS - 18 gr	ECM	---	70 - 28
1	**1160281**	1 CUP - 7 gr	ECM	AISI 430 ECONOMIC	70 - 24.5
2	**1160282**	2 CUPS - 14 gr	ECM	AISI 430 ECONOMIC	70 - 25
3	**1160339**	BLIND - CIECO	ECM C619900106	---	70 - 17

FILTRI CAFFE' ECM "DI PRECISIONE"
PRECISION COFFEE FILTERS ECM
PRÄZISIONSSIEBE ECM
FILTROS CAFÉ DE PRECISIÓN ECM

1

2

3

4 - ULTRAFINE

Photo	LF Code	Model	Suitable for	Notes	ø edge - height (H)	N° holes
1	**1460100**	1 CUP - 6/8 gr - H24.5	ECM	---	70 - 24.5	177
1	**1460101**	1 CUP - 7/9 gr - H26.5	ECM	---	70 - 26.5	253
2	**1460102**	2 CUPS - 12/18 gr - H24.5	ECM	---	70 - 24.5	641
2	**1460103**	2 CUPS - 14/20 gr - H26.5	ECM	---	70 - 26.5	641
3	**1460113**	2 CUPS - 12/18 gr - H24	ECM	---	70 - 24	715
3	**1460114**	2 CUPS - 16/20 gr - H26	ECM	---	70 - 26	715
3	**1460104**	3 CUPS - 18/22 gr - H28.5	ECM	---	70 - 28.5	715
4	**1460400**	2 CUPS - 12/18 gr - H24	ECM	ULTRAFINE MEMBRANE	70 - 24	565
4	**1460401**	2 CUPS - 14/20 gr - H26	ECM	ULTRAFINE MEMBRANE	70 - 26	565
4	**1460402**	2 CUPS - 18/22 gr - H28	ECM	ULTRAFINE MEMBRANE	70 - 28	565

Filtri progettati per ottenere la perfetta estrazione del caffè , acciaio Aisi 316 , certificati alimentare
Filters designed to obtain a perfect coffee brewing, Aisi 316 steel, food safe
Diese Siebe wurden für die perfekte Kaffeeextraktion hergestellt, Stahl Aisi 316, lebensmitteltauglich-zertifiziert
Filtros planeados para obtener la perfecta extracción del café, acero Aisi 316, certificados uso alimentario

FILTRI CAFFE' ECM MANUFACTURE
COFFEE FILTERS ECM MANUFACTURE
KAFFEESIEBE ECM MANUFACTURE
FILTROS CAFÉ ECM MANUFACTURE

1

2

3

Photo	LF Code	Model	Suitable for	Notes	ø edge - height (H)
1	**1160251**	1 CUP - 6 gr	ECM MANUFACTURE	---	70 - 20.5
1	**1160335**	1 CUP - 7 gr	ECM MANUFACTURE C619900104	---	70 - 24.5
2	**1160252**	2 CUPS - 12 gr	ECM MANUFACTURE	---	70 - 21
2	**1160337**	2 CUPS - 14 gr	ECM MANUFACTURE C619900105	---	70 - 24.5
1	**1160281**	1 CUP - 7 gr	ECM MANUFACTURE	AISI 430 ECONOMIC	70 - 24.5
2	**1160282**	2 CUPS - 14 gr	ECM MANUFACTURE	AISI 430 ECONOMIC	70 - 25
3	**1160339**	BLIND - CIECO	ECM MANUFACTURE C619900106	---	70 - 17

FILTRI CAFFE' ECM MANUFACTURE "DI PRECISIONE"
PRECISION COFFEE FILTERS ECM MANUFACTURE
PRÄZISIONSSIEBE ECM MANUFACTURE
FILTROS CAFÉ DE PRECISIÓN ECM MANUFACTURE

1

2

3

4 - ULTRAFINE

Photo	LF Code	Model	Suitable for	Notes	ø edge - height (H)	N° holes
1	**1460100**	1 CUP - 6/8 gr - H24.5	ECM MANUFACTURE	---	70 - 24.5	177
1	**1460101**	1 CUP - 7/9 gr - H26.5	ECM MANUFACTURE	---	70 - 26.5	253
2	**1460102**	2 CUPS - 12/18 gr - H24.5	ECM MANUFACTURE	---	70 - 24.5	641
2	**1460103**	2 CUPS - 14/20 gr - H26.5	ECM MANUFACTURE	---	70 - 26.5	641
3	**1460113**	2 CUPS - 12/18 gr - H24	ECM MANUFACTURE	---	70 - 24	715
3	**1460114**	2 CUPS - 16/20 gr - H26	ECM MANUFACTURE	---	70 - 26	715
3	**1460104**	3 CUPS - 18/22 gr - H28.5	ECM MANUFACTURE	---	70 - 28.5	715
4	**1460400**	2 CUPS - 12/18 gr - H24	ECM MANUFACTURE	ULTRAFINE MEMBRANE	70 - 24	565
4	**1460401**	2 CUPS - 14/20 gr - H26	ECM MANUFACTURE	ULTRAFINE MEMBRANE	70 - 26	565
4	**1460402**	2 CUPS - 18/22 gr - H28	ECM MANUFACTURE	ULTRAFINE MEMBRANE	70 - 28	565

Filtri progettati per ottenere la perfetta estrazione del caffè , acciaio Aisi 316 , certificati alimentare
Filters designed to obtain a perfect coffee brewing, Aisi 316 steel, food safe
Diese Siebe wurden für die perfekte Kaffeeextraktion hergestellt, Stahl Aisi 316, lebensmitteltauglich-zertifiziert
Filtros planeados para obtener la perfecta extracción del café, acero Aisi 316, certificados uso alimentario

FILTRI CAFFE' ELEKTRA
COFFEE FILTERS ELEKTRA
KAFFEESIEBE ELEKTRA
FILTROS CAFÉ ELEKTRA

1

2

3

4

5

Photo	LF Code	Model	Suitable for	Notes	ø edge - height (H)
1	**1160251**	1 CUP - 6 gr	ELEKTRA 01796035	---	70 - 20.5
1	**1160335**	1 CUP - 7 gr	ELEKTRA 00065035	---	70 - 24.5
2	**1160252**	2 CUPS - 12 gr	ELEKTRA	---	70 - 21
2	**1160337**	2 CUPS - 14 gr	ELEKTRA 00066035	---	70 - 24.5
1	**1160281**	1 CUP - 7 gr	ELEKTRA	AISI 430 ECONOMIC	70 - 24.5
2	**1160282**	2 CUPS - 14 gr	ELEKTRA	AISI 430 ECONOMIC	70 - 25
3	**1160339**	BLIND - CIECO	ELEKTRA 01309035	---	70 - 17
4	**1160009**	1 CUP	ELEKTRA 00164035	MICROCASA	58 - 22
5	**1160010**	2 CUPS	ELEKTRA 00163035	MICROCASA	58 - 24.5

FILTRI CAFFE' ELEKTRA "DI PRECISIONE"
PRECISION COFFEE FILTERS ELEKTRA
PRÄZISIONSSIEBE ELEKTRA
FILTROS CAFÉ DE PRECISIÓN ELEKTRA

1

2

3

4 - ULTRAFINE

Photo	LF Code	Model	Suitable for	Notes	ø edge - height (H)	N° holes
1	**1460100**	1 CUP - 6/8 gr - H24.5	ELEKTRA	---	70 - 24.5	177
1	**1460101**	1 CUP - 7/9 gr - H26.5	ELEKTRA	---	70 - 26.5	253
2	**1460102**	2 CUPS - 12/18 gr - H24.5	ELEKTRA	---	70 - 24.5	641
2	**1460103**	2 CUPS - 14/20 gr - H26.5	ELEKTRA	---	70 - 26.5	641
3	**1460113**	2 CUPS - 12/18 gr - H24	ELEKTRA	---	70 - 24	715
3	**1460114**	2 CUPS - 16/20 gr - H26	ELEKTRA	---	70 - 26	715
3	**1460104**	3 CUPS - 18/22 gr - H28.5	ELEKTRA	---	70 - 28.5	715
4	**1460400**	2 CUPS - 12/18 gr - H24	ELEKTRA	ULTRAFINE MEMBRANE	70 - 24	565
4	**1460401**	2 CUPS - 14/20 gr - H26	ELEKTRA	ULTRAFINE MEMBRANE	70 - 26	565
4	**1460402**	2 CUPS - 18/22 gr - H28	ELEKTRA	ULTRAFINE MEMBRANE	70 - 28	565

Filtri progettati per ottenere la perfetta estrazione del caffè , acciaio Aisi 316 , certificati alimentare
Filters designed to obtain a perfect coffee brewing, Aisi 316 steel, food safe
Diese Siebe wurden für die perfekte Kaffeeextraktion hergestellt, Stahl Aisi 316, lebensmitteltauglich-zertifiziert
Filtros planeados para obtener la perfecta extracción del café, acero Aisi 316, certificados uso alimentario

FILTRI CAFFE' EXPOBAR
COFFEE FILTERS EXPOBAR
KAFFEESIEBE EXPOBAR
FILTROS CAFÉ EXPOBAR

1

2

3

4

5

Photo	LF Code	Model	Suitable for	Notes	ø edge - height (H)
1	**1160251**	1 CUP - 6 gr	EXPOBAR 75000037	---	70 - 20.5
1	**1160335**	1 CUP - 7 gr	EXPOBAR 75000031	---	70 - 24.5
2	**1160252**	2 CUPS - 12 gr	EXPOBAR 75000045	---	70 - 21
2	**1160337**	2 CUPS - 14 gr	EXPOBAR 75000041	---	70 - 24.5
1	**1160281**	1 CUP - 7 gr	EXPOBAR	AISI 430 ECONOMIC	70 - 24.5
2	**1160282**	2 CUPS - 14 gr	EXPOBAR	AISI 430 ECONOMIC	70 - 25
3	**1160339**	BLIND - CIECO	EXPOBAR 75000020	---	70 - 17
4	**1160293**	BLIND EPDM - CIECO IN EPDM	EXPOBAR 75000000	---	50
5	**1160503**	POD 1 CUP	EXPOBAR	---	70 - 17
5	**1160504**	POD 2 CUPS	EXPOBAR	---	70 - 21.5

FILTRI CAFFE' EXPOBAR "DI PRECISIONE"
PRECISION COFFEE FILTERS EXPOBAR
PRÄZISIONSSIEBE EXPOBAR
FILTROS CAFÉ DE PRECISIÓN EXPOBAR

1

2

3

4 - ULTRAFINE

Photo	LF Code	Model	Suitable for	Notes	ø edge - height (H)	N° holes
1	**1460100**	1 CUP - 6/8 gr - H24.5	EXPOBAR	---	70 - 24.5	177
1	**1460101**	1 CUP - 7/9 gr - H26.5	EXPOBAR	---	70 - 26.5	253
2	**1460102**	2 CUPS - 12/18 gr - H24.5	EXPOBAR	---	70 - 24.5	641
2	**1460103**	2 CUPS - 14/20 gr - H26.5	EXPOBAR	---	70 - 26.5	641
3	**1460113**	2 CUPS - 12/18 gr - H24	EXPOBAR	---	70 - 24	715
3	**1460114**	2 CUPS - 16/20 gr - H26	EXPOBAR	---	70 - 26	715
3	**1460104**	3 CUPS - 18/22 gr - H28.5	EXPOBAR	---	70 - 28.5	715
4	**1460400**	2 CUPS - 12/18 gr - H24	EXPOBAR	ULTRAFINE MEMBRANE	70 - 24	565
4	**1460401**	2 CUPS - 14/20 gr - H26	EXPOBAR	ULTRAFINE MEMBRANE	70 - 26	565
4	**1460402**	2 CUPS - 18/22 gr - H28	EXPOBAR	ULTRAFINE MEMBRANE	70 - 28	565

Filtri progettati per ottenere la perfetta estrazione del caffè , acciaio Aisi 316 , certificati alimentare
Filters designed to obtain a perfect coffee brewing, Aisi 316 steel, food safe
Diese Siebe wurden für die perfekte Kaffeeextraktion hergestellt, Stahl Aisi 316, lebensmitteltauglich-zertifiziert
Filtros planeados para obtener la perfecta extracción del café, acero Aisi 316, certificados uso alimentario

FILTRI CAFFE' FAEMA
COFFEE FILTERS FAEMA
KAFFEESIEBE FAEMA
FILTROS CAFÉ FAEMA

1

2

3

4

5

6

Photo	LF Code	Model	Suitable for	Notes	ø edge - height (H)
1	**1160251**	1 CUP - 6 gr	FAEMA 457367000 / 4771014418	---	70 - 20.5
1	**1160085**	1 CUP - 6 gr	FAEMA 457232000	E98 COMPACT	68 - 18
1	**1160335**	1 CUP - 7 gr	FAEMA 457368000 / 4771021830	---	70 - 24.5
1	**1160530**	1 CUP - 7 gr	FAEMA 457362000	---	70 - 20
2	**1160252**	2 CUPS - 12 gr	FAEMA 4771016575	---	70 - 21
2	**1160267**	2 CUPS - 12 gr	FAEMA 457233000	E98 COMPACT	68 - 22
2	**1160337**	2 CUPS - 14 gr	FAEMA 457369000 / 4771021994	---	70 - 24.5
3	**1160345**	2 CUPS - 18 gr	FAEMA	---	70 - 28
1	**1160281**	1 CUP - 7 gr	FAEMA	AISI 430 ECONOMIC	70 - 24.5
2	**1160282**	2 CUPS - 14 gr	FAEMA	AISI 430 ECONOMIC	70 - 25
4	**1160339**	BLIND - CIECO	FAEMA 4771021902	---	70 - 17
5	**1160293**	BLIND EPDM - CIECO IN EPDM	FAEMA 457058000	---	50
6	**1160506**	POD 1 CUP	FAEMA 457313000	E98 COMPACT	68 - 18.5
6	**1160503**	POD 1 CUP	FAEMA	---	70 - 17
6	**1160504**	POD 2 CUPS	FAEMA	---	70 - 21.5

FILTRI CAFFE' FAEMA "DI PRECISIONE"
PRECISION COFFEE FILTERS FAEMA
PRÄZISIONSSIEBE FAEMA
FILTROS CAFÉ DE PRECISIÓN FAEMA

1

2

3

4 - ULTRAFINE

Photo	LF Code	Model	Suitable for	Notes	ø edge - height (H)	N° holes
1	**1460100**	1 CUP - 6/8 gr - H24.5	FAEMA	---	70 - 24.5	177
1	**1460101**	1 CUP - 7/9 gr - H26.5	FAEMA	---	70 - 26.5	253
2	**1460102**	2 CUPS - 12/18 gr - H24.5	FAEMA	---	70 - 24.5	641
2	**1460103**	2 CUPS - 14/20 gr - H26.5	FAEMA	---	70 - 26.5	641
3	**1460113**	2 CUPS - 12/18 gr - H24	FAEMA	---	70 - 24	715
3	**1460114**	2 CUPS - 16/20 gr - H26	FAEMA	---	70 - 26	715
3	**1460104**	3 CUPS - 18/22 gr - H28.5	FAEMA	---	70 - 28.5	715
4	**1460400**	2 CUPS - 12/18 gr - H24	FAEMA	ULTRAFINE MEMBRANE	70 - 24	565
4	**1460401**	2 CUPS - 14/20 gr - H26	FAEMA	ULTRAFINE MEMBRANE	70 - 26	565
4	**1460402**	2 CUPS - 18/22 gr - H28	FAEMA	ULTRAFINE MEMBRANE	70 - 28	565

Filtri progettati per ottenere la perfetta estrazione del caffè , acciaio Aisi 316 , certificati alimentare
Filters designed to obtain a perfect coffee brewing, Aisi 316 steel, food safe
Diese Siebe wurden für die perfekte Kaffeeextraktion hergestellt, Stahl Aisi 316, lebensmitteltauglich-zertifiziert
Filtros planeados para obtener la perfecta extracción del café, acero Aisi 316, certificados uso alimentario

FILTRI CAFFE' FAIMAC
COFFEE FILTERS FAIMAC
KAFFEESIEBE FAIMAC
FILTROS CAFÉ FAIMAC

1

2

3

Photo	LF Code	Model	Suitable for	Notes	ø edge - height (H)
1	**1160251**	1 CUP - 6 gr	FAIMAC	---	70 - 20.5
1	**1160335**	1 CUP - 7 gr	FAIMAC	---	70 - 24.5
2	**1160252**	2 CUPS - 12 gr	FAIMAC	---	70 - 21
2	**1160337**	2 CUPS - 14 gr	FAIMAC	---	70 - 24.5
1	**1160281**	1 CUP - 7 gr	FAIMAC	AISI 430 ECONOMIC	70 - 24.5
2	**1160282**	2 CUPS - 14 gr	FAIMAC	AISI 430 ECONOMIC	70 - 25
3	**1160339**	BLIND - CIECO	FAIMAC	---	70 - 17

FILTRI CAFFE' FIAMMA RST
COFFEE FILTERS FIAMMA RST
KAFFEESIEBE FIAMMA RST
FILTROS CAFÉ FIAMMA RST

1

2

3

4

Photo	LF Code	Model	Suitable for	Notes	ø edge - height (H)
1	**1160251**	1 CUP - 6 gr	FIAMMA RST 5.0.000.0170	---	70 - 20.5
1	**1160335**	1 CUP - 7 gr	FIAMMA RST	---	70 - 24.5
2	**1160252**	2 CUPS - 12 gr	FIAMMA RST 5.0.000.0173	---	70 - 21
2	**1160337**	2 CUPS - 14 gr	FIAMMA RST	---	70 - 24.5
1	**1160281**	1 CUP - 7 gr	FIAMMA RST	AISI 430 ECONOMIC	70 - 24.5
2	**1160282**	2 CUPS - 14 gr	FIAMMA RST	AISI 430 ECONOMIC	70 - 25
3	**1160339**	BLIND - CIECO	FIAMMA RST 5.0.000.0167	---	70 - 17
4	**1160503**	POD 1 CUP	FIAMMA RST 5.0.000.0169	---	70 - 17
4	**1160504**	POD 2 CUPS	FIAMMA RST	---	70 - 21.5

FILTRI CAFFE' FIORENZATO CS
COFFEE FILTERS FIORENZATO CS
KAFFEESIEBE FIORENZATO CS
FILTROS CAFÉ FIORENZATO CS

1

2

3

Photo	LF Code	Model	Suitable for	Notes	ø edge - height (H)
1	**1160251**	1 CUP - 6 gr	FIORENZATO A2200221	---	70 - 20.5
1	**1160335**	1 CUP - 7 gr	FIORENZATO A2200028	---	70 - 24.5
2	**1160252**	2 CUPS - 12 gr	FIORENZATO	---	70 - 21
2	**1160337**	2 CUPS - 14 gr	FIORENZATO A2200029	---	70 - 24.5
1	**1160281**	1 CUP - 7 gr	FIORENZATO	AISI 430 ECONOMIC	70 - 24.5
2	**1160282**	2 CUPS - 14 gr	FIORENZATO	AISI 430 ECONOMIC	70 - 25
3	**1160339**	BLIND - CIECO	FIORENZATO A2200030	---	70 - 17

FILTRI CAFFE' FIORENZATO CS "DI PRECISIONE"
PRECISION COFFEE FILTERS FIORENZATO CS
PRÄZISIONSSIEBE FIORENZATO CS
FILTROS CAFÉ DE PRECISIÓN FIORENZATO CS

1

2

3

4 - ULTRAFINE

Photo	LF Code	Model	Suitable for	Notes	ø edge - height (H)	N° holes
1	**1460100**	1 CUP - 6/8 gr - H24.5	FIORENZATO CS	---	70 - 24.5	177
1	**1460101**	1 CUP - 7/9 gr - H26.5	FIORENZATO CS	---	70 - 26.5	253
2	**1460102**	2 CUPS - 12/18 gr - H24.5	FIORENZATO CS	---	70 - 24.5	641
2	**1460103**	2 CUPS - 14/20 gr - H26.5	FIORENZATO CS	---	70 - 26.5	641
3	**1460113**	2 CUPS - 12/18 gr - H24	FIORENZATO CS	---	70 - 24	715
3	**1460114**	2 CUPS - 16/20 gr - H26	FIORENZATO CS	---	70 - 26	715
3	**1460104**	3 CUPS - 18/22 gr - H28.5	FIORENZATO CS	---	70 - 28.5	715
4	**1460400**	2 CUPS - 12/18 gr - H24	FIORENZATO CS	ULTRAFINE MEMBRANE	70 - 24	565
4	**1460401**	2 CUPS - 14/20 gr - H26	FIORENZATO CS	ULTRAFINE MEMBRANE	70 - 26	565
4	**1460402**	2 CUPS - 18/22 gr - H28	FIORENZATO CS	ULTRAFINE MEMBRANE	70 - 28	565

Filtri progettati per ottenere la perfetta estrazione del caffè , acciaio Aisi 316 , certificati alimentare
Filters designed to obtain a perfect coffee brewing, Aisi 316 steel, food safe
Diese Siebe wurden für die perfekte Kaffeeextraktion hergestellt, Stahl Aisi 316, lebensmitteltauglich-zertifiziert
Filtros planeados para obtener la perfecta extracción del café, acero Aisi 316, certificados uso alimentario

FILTRI CAFFE' FRACINO
COFFEE FILTERS FRACINO
KAFFEESIEBE FRACINO
FILTROS CAFÉ FRACINO

1

2

3

Photo	LF Code	Model	Suitable for	Notes	ø edge - height (H)
1	**1160251**	1 CUP - 6 gr	FRACINO FC107	---	70 - 20.5
1	**1160335**	1 CUP - 7 gr	FRACINO FC107/D	---	70 - 24.5
2	**1160252**	2 CUPS - 12 gr	FRACINO FC108	---	70 - 21
2	**1160337**	2 CUPS - 14 gr	FRACINO FC108/D	---	70 - 24.5
1	**1160281**	1 CUP - 7 gr	FRACINO	AISI 430 ECONOMIC	70 - 24.5
2	**1160282**	2 CUPS - 14 gr	FRACINO	AISI 430 ECONOMIC	70 - 25
3	**1160339**	BLIND - CIECO	FRACINO FC109	---	70 - 17

FILTRI CAFFE' FRACINO "DI PRECISIONE"
"PRECISION" COFFEE FILTERS FRACINO
KAFFEEFILTER FRACINO "PRÄZISION"
FILTROS CAFÉ FRACINO "DE PRECISIÓN"

1

2

3

4 - ULTRAFINE

Photo	LF Code	Model	Suitable for	Notes	ø edge - height (H)	N° holes
1	**1460100**	1 CUP - 6/8 gr - H24.5	FRACINO	---	70 - 24.5	177
1	**1460101**	1 CUP - 7/9 gr - H26.5	FRACINO	---	70 - 26.5	253
2	**1460102**	2 CUPS - 12/18 gr - H24.5	FRACINO	---	70 - 24.5	641
2	**1460103**	2 CUPS - 14/20 gr - H26.5	FRACINO	---	70 - 26.5	641
3	**1460113**	2 CUPS - 12/18 gr - H24	FRACINO	---	70 - 24	715
3	**1460114**	2 CUPS - 16/20 gr - H26	FRACINO	---	70 - 26	715
3	**1460104**	3 CUPS - 18/22 gr - H28.5	FRACINO	---	70 - 28.5	715
4	**1460400**	2 CUPS - 12/18 gr - H24	FRACINO	ULTRAFINE MEMBRANE	70 - 24	565
4	**1460401**	2 CUPS - 14/20 gr - H26	FRACINO	ULTRAFINE MEMBRANE	70 - 26	565
4	**1460402**	2 CUPS - 18/22 gr - H28	FRACINO	ULTRAFINE MEMBRANE	70 - 28	565

Filtri progettati per ottenere la perfetta estrazione del caffè , acciaio Aisi 316 , certificati alimentare
Filters designed to obtain a perfect coffee brewing, Aisi 316 steel, food safe
Diese Siebe wurden für die perfekte Kaffeeextraktion hergestellt, Stahl Aisi 316, lebensmitteltauglich-zertifiziert
Filtros planeados para obtener la perfecta extracción del café, acero Aisi 316, certificados uso alimentario

FILTRI CAFFE' FUTURA
COFFEE FILTERS FUTURA
KAFFEEFILTER FUTURA
FILTROS CAFÉ FUTURA

1

2

3

Photo	LF Code	Model	Suitable for	Notes	ø edge - height (H)
1	**1160251**	1 CUP - 6 gr	FUTURA 200165	---	70 - 20.5
1	**1160335**	1 CUP - 7 gr	FUTURA 200084	---	70 - 24.5
2	**1160252**	2 CUPS - 12 gr	FUTURA 200166	---	70 - 21
2	**1160337**	2 CUPS - 14 gr	FUTURA 200085	---	70 - 24.5
3	**1160339**	BLIND - CIECO	FUTURA 200086	---	70 - 17

FILTRI CAFFE' FUTURMAT
COFFEE FILTERS FUTURMAT
KAFFEESIEBE FUTURMAT
FILTROS CAFÉ FUTURMAT

1

2

3

4

Photo	LF Code	Model	Suitable for	Notes	ø edge - height (H)
1	**1160060**	1 CUP - 6 gr	FUTURMAT 01441807	---	70 - 20.5
1	**1160062**	1 CUP - 7 gr	FUTURMAT 02183002	---	70 - 24.5
2	**1160061**	2 CUPS - 12 gr	FUTURMAT 01657501	---	70 - 21
2	**1160063**	2 CUPS - 14 gr	FUTURMAT 02199404	---	70 - 24.5
3	**1160339**	BLIND - CIECO	FUTURMAT 02190205	---	70 - 17
4	**1160503**	POD 1 CUP	FUTURMAT 08365000	---	70 - 17
4	**1160504**	POD 2 CUPS	FUTURMAT 08365100	---	70 - 21.5

FILTRI CAFFE' FUTURMAT "DI PRECISIONE"
PRECISION COFFEE FILTERS FUTURMAT
PRÄZISIONSSIEBE FUTURMAT
FILTROS CAFÉ DE PRECISIÓN FUTURMAT

1

2

3

4 - ULTRAFINE

Photo	LF Code	Model	Suitable for	Notes	ø edge - height (H)	N° holes
1	**1460100**	1 CUP - 6/8 gr - H24.5	FUTURMAT	---	70 - 24.5	177
1	**1460101**	1 CUP - 7/9 gr - H26.5	FUTURMAT	---	70 - 26.5	253
2	**1460102**	2 CUPS - 12/18 gr - H24.5	FUTURMAT	---	70 - 24.5	641
2	**1460103**	2 CUPS - 14/20 gr - H26.5	FUTURMAT	---	70 - 26.5	641
3	**1460113**	2 CUPS - 12/18 gr - H24	FUTURMAT	---	70 - 24	715
3	**1460114**	2 CUPS - 16/20 gr - H26	FUTURMAT	---	70 - 26	715
3	**1460104**	3 CUPS - 18/22 gr - H28.5	FUTURMAT	---	70 - 28.5	715
4	**1460400**	2 CUPS - 12/18 gr - H24	FUTURMAT	ULTRAFINE MEMBRANE	70 - 24	565
4	**1460401**	2 CUPS - 14/20 gr - H26	FUTURMAT	ULTRAFINE MEMBRANE	70 - 26	565
4	**1460402**	2 CUPS - 18/22 gr - H28	FUTURMAT	ULTRAFINE MEMBRANE	70 - 28	565

Filtri progettati per ottenere la perfetta estrazione del caffè , acciaio Aisi 316 , certificati alimentare
Filters designed to obtain a perfect coffee brewing, Aisi 316 steel, food safe
Diese Siebe wurden für die perfekte Kaffeeextraktion hergestellt, Stahl Aisi 316, lebensmitteltauglich-zertifiziert
Filtros planeados para obtener la perfecta extracción del café, acero Aisi 316, certificados uso alimentario

FILTRI CAFFE' GAGGIA
COFFEE FILTERS GAGGIA
KAFFEESIEBE GAGGIA
FILTROS CAFÉ GAGGIA

1

2

3

4

5

6

Photo	LF Code	Model	Suitable for	Notes	ø edge - height (H)
1	**1160261**	1 CUP - 7 gr	GAGGIA WGANF08/004/B / NF08/004	---	68 - 24.5
2	**1160262**	2 CUPS - 14 gr	GAGGIA WGANF08/005/B / NF08/005	---	68 - 24.5
3	**1160339**	BLIND - CIECO	GAGGIA WGANF08/006	---	70 - 17
4	**1160199**	1 CUP	GAGGIA 124653221	---	60 - 20
5	**1160200**	2 CUPS	GAGGIA 124650221	---	60 - 25.5
6	**1160503**	POD 1 CUP	GAGGIA	---	70 - 17
6	**1160504**	POD 2 CUPS	GAGGIA	---	70 - 21.5

FILTRI CAFFE' GAGGIA
COFFEE FILTERS GAGGIA
KAFFEESIEBE GAGGIA
FILTROS CAFÉ GAGGIA

1

2

3

4

Photo	LF Code	Model	Suitable for	Notes	ø edge - height (H)
1	**1460013**	1 CUP	GAGGIA 11011693	CLASSIC	68 - 27
2	**1460012**	2 CUPS	GAGGIA 11007038	CLASSIC	68 - 27
3	**1160113**	1 CUP	GAGGIA S327054	G105 - G106	60 - 20.5
4	**1160013**	2 CUPS	GAGGIA S327053	G105 - G106	60 - 25

FILTRI CAFFE' GAGGIA "DI PRECISIONE"
PRECISION COFFEE FILTERS GAGGIA
PRÄZISIONSSIEBE GAGGIA
FILTROS CAFÉ DE PRECISIÓN GAGGIA

1

2

3

Photo	LF Code	Model	Suitable for	Notes	ø edge - height (H)	N° holes
1	**1460105**	1 CUP - 6/9 gr - H24.5	GAGGIA	---	68 - 24.5	253
2	**1460106**	2 CUPS - 12/18 gr - H24.5	GAGGIA	---	68 - 24.5	641
3	**1460107**	2 CUPS - 16/22 gr - H26.5	GAGGIA	---	68 - 26.5	715

Filtri progettati per ottenere la perfetta estrazione del caffè , acciaio Aisi 316 , certificati alimentare
Filters designed to obtain a perfect coffee brewing, Aisi 316 steel, food safe
Diese Siebe wurden für die perfekte Kaffeeextraktion hergestellt, Stahl Aisi 316, lebensmitteltauglich-zertifiziert
Filtros planeados para obtener la perfecta extracción del café, acero Aisi 316, certificados uso alimentario

FILTRI CAFFE' GAGGIA SPAGNA
COFFEE FILTERS GAGGIA SPAGNA
KAFFEESIEBE GAGGIA SPAGNA
FILTROS CAFÉ GAGGIA SPAGNA

1

2

3

4

Photo	LF Code	Model	Suitable for	Notes	ø edge - height (H)
1	**1160060**	1 CUP - 6 gr	GAGGIA SPAGNA 01441807	---	70 - 20.5
1	**1160062**	1 CUP - 7 gr	GAGGIA SPAGNA 02183002	---	70 - 24.5
2	**1160061**	2 CUPS - 12 gr	GAGGIA SPAGNA 01657501	---	70 - 21
2	**1160063**	2 CUPS - 14 gr	GAGGIA SPAGNA 02199404	---	70 - 24.5
3	**1160339**	BLIND - CIECO	GAGGIA SPAGNA 02190205	---	70 - 17
4	**1160503**	POD 1 CUP	GAGGIA SPAGNA 08365000	---	70 - 17
4	**1160504**	POD 2 CUPS	GAGGIA SPAGNA 08365100	---	70 - 21.5

FILTRI CAFFE' GAGGIA SPAGNA "DI PRECISIONE"
PRECISION COFFEE FILTERS GAGGIA SPAGNA
PRÄZISIONSSIEBE GAGGIA SPAGNA
FILTROS CAFÉ DE PRECISIÓN GAGGIA SPAGNA

1

2

3

4 - ULTRAFINE

Photo	LF Code	Model	Suitable for	Notes	ø edge - height (H)	N° holes
1	**1460100**	1 CUP - 6/8 gr - H24.5	GAGGIA SPAGNA	---	70 - 24.5	177
1	**1460101**	1 CUP - 7/9 gr - H26.5	GAGGIA SPAGNA	---	70 - 26.5	253
2	**1460102**	2 CUPS - 12/18 gr - H24.5	GAGGIA SPAGNA	---	70 - 24.5	641
2	**1460103**	2 CUPS - 14/20 gr - H26.5	GAGGIA SPAGNA	---	70 - 26.5	641
3	**1460113**	2 CUPS - 12/18 gr - H24	GAGGIA SPAGNA	---	70 - 24	715
3	**1460114**	2 CUPS - 16/20 gr - H26	GAGGIA SPAGNA	---	70 - 26	715
3	**1460104**	3 CUPS - 18/22 gr - H28.5	GAGGIA SPAGNA	---	70 - 28.5	715
4	**1460400**	2 CUPS - 12/18 gr - H24	GAGGIA SPAGNA	ULTRAFINE MEMBRANE	70 - 24	565
4	**1460401**	2 CUPS - 14/20 gr - H26	GAGGIA SPAGNA	ULTRAFINE MEMBRANE	70 - 26	565
4	**1460402**	2 CUPS - 18/22 gr - H28	GAGGIA SPAGNA	ULTRAFINE MEMBRANE	70 - 28	565

Filtri progettati per ottenere la perfetta estrazione del caffè , acciaio Aisi 316 , certificati alimentare
Filters designed to obtain a perfect coffee brewing, Aisi 316 steel, food safe
Diese Siebe wurden für die perfekte Kaffeeextraktion hergestellt, Stahl Aisi 316, lebensmitteltauglich-zertifiziert
Filtros planeados para obtener la perfecta extracción del café, acero Aisi 316, certificados uso alimentario

FILTRI CAFFE' GRIMAC
COFFEE FILTERS GRIMAC
KAFFEESIEBE GRIMAC
FILTROS CAFÉ GRIMAC

1

2

3

4

Photo	LF Code	Model	Suitable for	Notes	ø edge - height (H)
1	**1160251**	1 CUP - 6 gr	GRIMAC 1090100004 / A2200221	---	70 - 20.5
1	**1160335**	1 CUP - 7 gr	GRIMAC 1090100005 / A2200028	---	70 - 24.5
2	**1160252**	2 CUPS - 12 gr	GRIMAC 1090200004 / GR765	---	70 - 21
2	**1160337**	2 CUPS - 14 gr	GRIMAC 1090200005 / A2200029	---	70 - 24.5
3	**1160345**	2 CUPS - 18 gr	GRIMAC	---	70 - 28
1	**1160281**	1 CUP - 7 gr	GRIMAC	AISI 430 ECONOMIC	70 - 24.5
2	**1160282**	2 CUPS - 14 gr	GRIMAC	AISI 430 ECONOMIC	70 - 25
4	**1160339**	BLIND - CIECO	GRIMAC 1090300002 / A2200030	---	70 - 17

FILTRI CAFFE' GRIMAC "DI PRECISIONE"
PRECISION COFFEE FILTERS GRIMAC
PRÄZISIONSSIEBE GRIMAC
FILTROS CAFÉ DE PRECISIÓN GRIMAC

1

2

3

4 - ULTRAFINE

Photo	LF Code	Model	Suitable for	Notes	ø edge - height (H)	N° holes
1	**1460100**	1 CUP - 6/8 gr - H24.5	GRIMAC	---	70 - 24.5	177
1	**1460101**	1 CUP - 7/9 gr - H26.5	GRIMAC	---	70 - 26.5	253
2	**1460102**	2 CUPS - 12/18 gr - H24.5	GRIMAC	---	70 - 24.5	641
2	**1460103**	2 CUPS - 14/20 gr - H26.5	GRIMAC	---	70 - 26.5	641
3	**1460113**	2 CUPS - 12/18 gr - H24	GRIMAC	---	70 - 24	715
3	**1460114**	2 CUPS - 16/20 gr - H26	GRIMAC	---	70 - 26	715
3	**1460104**	3 CUPS - 18/22 gr - H28.5	GRIMAC	---	70 - 28.5	715
4	**1460400**	2 CUPS - 12/18 gr - H24	GRIMAC	ULTRAFINE MEMBRANE	70 - 24	565
4	**1460401**	2 CUPS - 14/20 gr - H26	GRIMAC	ULTRAFINE MEMBRANE	70 - 26	565
4	**1460402**	2 CUPS - 18/22 gr - H28	GRIMAC	ULTRAFINE MEMBRANE	70 - 28	565

Filtri progettati per ottenere la perfetta estrazione del caffè , acciaio Aisi 316 , certificati alimentare
Filters designed to obtain a perfect coffee brewing, Aisi 316 steel, food safe
Diese Siebe wurden für die perfekte Kaffeeextraktion hergestellt, Stahl Aisi 316, lebensmitteltauglich-zertifiziert
Filtros planeados para obtener la perfecta extracción del café, acero Aisi 316, certificados uso alimentario

FILTRI CAFFE' GRUPPO IZZO
COFFEE FILTERS GRUPPO IZZO
KAFFEESIEBE GRUPPO IZZO
FILTROS CAFÉ GRUPPO IZZO

1 2 3 4 5 6

Photo	LF Code	Model	Suitable for	Notes	ø edge - height (H)
1	**1160251**	1 CUP - 6 gr	GRUPPO IZZO FE17	---	70 - 20.5
1	**1160335**	1 CUP - 7 gr	GRUPPO IZZO	---	70 - 24.5
1	**1160281**	1 CUP - 7 gr	GRUPPO IZZO	AISI 430 ECONOMIC	70 - 24.5
2	**1160252**	2 CUPS - 12 gr	GRUPPO IZZO FE18	---	70 - 21
2	**1160337**	2 CUPS - 14 gr	GRUPPO IZZO	---	70 - 24.5
2	**1160282**	2 CUPS - 14 gr	GRUPPO IZZO	AISI 430 ECONOMIC	70 - 25
3	**1160339**	BLIND - CIECO	GRUPPO IZZO	---	70 - 17
4	**1160033**	1 CUP - 6 gr	GRUPPO IZZO	---	66 - 21
4	**1160273**	1 CUP - 7 gr	GRUPPO IZZO	---	66 - 22
4	**1160271**	1 CUP - 8 gr	GRUPPO IZZO	---	66 - 21.4
4	**1160044**	2 CUPS - 9 gr	GRUPPO IZZO	---	66 - 25
4	**5069283**	2 CUPS - 9 gr	GRUPPO IZZO	---	66 - 25.5
5	**1160133**	2 CUPS - 12 gr	GRUPPO IZZO	---	66 - 24
5	**1160270**	2 CUPS - 14 gr	GRUPPO IZZO	---	66 - 25
5	**1160274**	2 CUPS - 16 gr	GRUPPO IZZO	---	66 - 26.4
5	**1160045**	2 CUPS - 18 gr	GRUPPO IZZO	---	66 - 28.5
5	**1160046**	2 CUPS - 21 gr	GRUPPO IZZO	---	66 - 32
6	**1160287**	BLIND - CIECO	GRUPPO IZZO	---	66 - 22

FILTRI CAFFE' GRUPPO IZZO "DI PRECISIONE"
PRECISION COFFEE FILTERS GRUPPO IZZO
PRÄZISIONSSIEBE GRUPPO IZZO
FILTROS CAFÉ DE PRECISIÓN GRUPPO IZZO

1 2 3 4 - ULTRAFINE

Photo	LF Code	Model	Suitable for	Notes	ø edge - height (H)	N° holes
1	**1460100**	1 CUP - 6/8 gr - H24.5	GRUPPO IZZO	---	70 - 24.5	177
1	**1460101**	1 CUP - 7/9 gr - H26.5	GRUPPO IZZO	---	70 - 26.5	253
2	**1460102**	2 CUPS - 12/18 gr - H24.5	GRUPPO IZZO	---	70 - 24.5	641
2	**1460103**	2 CUPS - 14/20 gr - H26.5	GRUPPO IZZO	---	70 - 26.5	641
3	**1460113**	2 CUPS - 12/18 gr - H24	GRUPPO IZZO	---	70 - 24	715
3	**1460114**	2 CUPS - 16/20 gr - H26	GRUPPO IZZO	---	70 - 26	715
3	**1460104**	3 CUPS - 18/22 gr - H28.5	GRUPPO IZZO	---	70 - 28.5	715
4	**1460400**	2 CUPS - 12/18 gr - H24	GRUPPO IZZO	ULTRAFINE MEMBRANE	70 - 24	565
4	**1460401**	2 CUPS - 14/20 gr - H26	GRUPPO IZZO	ULTRAFINE MEMBRANE	70 - 26	565
4	**1460402**	2 CUPS - 18/22 gr - H28	GRUPPO IZZO	ULTRAFINE MEMBRANE	70 - 28	565
1	**1460108**	1 CUP - 6/9 gr - H25	GRUPPO IZZO	---	66 - 25	293
2	**1460109**	2 CUPS - 14/18 gr - H26	GRUPPO IZZO	---	66 - 26	641
3	**1460115**	2 CUPS - 18/20 gr - H32	GRUPPO IZZO	---	66 - 32	641

Filtri progettati per ottenere la perfetta estrazione del caffè , acciaio Aisi 316 , certificati alimentare
Filters designed to obtain a perfect coffee brewing, Aisi 316 steel, food safe
Diese Siebe wurden für die perfekte Kaffeeextraktion hergestellt, Stahl Aisi 316, lebensmitteltauglich-zertifiziert
Filtros planeados para obtener la perfecta extracción del café, acero Aisi 316, certificados uso alimentario

FILTRI CAFFE' ISOMAC
COFFEE FILTERS ISOMAC
KAFFEESIEBE ISOMAC
FILTROS CAFÉ ISOMAC

1

2

3

4

Photo	LF Code	Model	Suitable for	Notes	ø edge - height (H)
1	**1160335**	1 CUP - 7 gr	ISOMAC IS000707	---	70 - 24.5
2	**1160337**	2 CUPS - 14 gr	ISOMAC IS000848	---	70 - 24.5
3	**1160199**	1 CUP	ISOMAC 000292	---	60 - 20
4	**1160200**	2 CUPS	ISOMAC 000293	---	60 - 25.5
3	**5040051**	1 CUP	ISOMAC IS000744	---	64 - 22
4	**1460009**	2 CUPS	ISOMAC IS000745	---	64 - 24.5

FILTRI CAFFE' ITALCREM
COFFEE FILTERS ITALCREM
KAFFEESIEBE ITALCREM
FILTROS CAFÉ ITALCREM

1

2

3

4

Photo	LF Code	Model	Suitable for	Notes	ø edge - height (H)
1	**1160060**	1 CUP - 6 gr	ITALCREM 01441807	---	70 - 20.5
1	**1160062**	1 CUP - 7 gr	ITALCREM 02183002	---	70 - 24.5
2	**1160061**	2 CUPS - 12 gr	ITALCREM 01657501	---	70 - 21
2	**1160063**	2 CUPS - 14 gr	ITALCREM 02199404	---	70 - 24.5
3	**1160339**	BLIND - CIECO	ITALCREM 02190205	---	70 - 17
4	**1160503**	POD 1 CUP	ITALCREM 08365000	---	70 - 17
4	**1160504**	POD 2 CUPS	ITALCREM 08365100	---	70 - 21.5

FILTRI CAFFE' LARANZATO
COFFEE FILTERS LARANZATO
KAFFEESIEBE LARANZATO
FILTROS CAFÉ LARANZATO

1

2

3

Photo	LF Code	Model	Suitable for	Notes	ø edge - height (H)
1	**1160251**	1 CUP - 6 gr	LARANZATO	---	70 - 20.5
1	**1160335**	1 CUP - 7 gr	LARANZATO	---	70 - 24.5
2	**1160252**	2 CUPS - 12 gr	LARANZATO	---	70 - 21
2	**1160337**	2 CUPS - 14 gr	LARANZATO	---	70 - 24.5
1	**1160281**	1 CUP - 7 gr	LARANZATO	AISI 430 ECONOMIC	70 - 24.5
2	**1160282**	2 CUPS - 14 gr	LARANZATO	AISI 430 ECONOMIC	70 - 25
3	**1160339**	BLIND - CIECO	LARANZATO	---	70 - 17

FILTRI CAFFE' MAGISTER
COFFEE FILTERS MAGISTER
KAFFEESIEBE MAGISTER
FILTROS CAFÉ MAGISTER

1

2

3

Photo	LF Code	Model	Suitable for	Notes	ø edge - height (H)
1	**1160251**	1 CUP - 6 gr	MAGISTER	---	70 - 20.5
1	**1160335**	1 CUP - 7 gr	MAGISTER 210026	---	70 - 24.5
2	**1160252**	2 CUPS - 12 gr	MAGISTER	---	70 - 21
2	**1160337**	2 CUPS - 14 gr	MAGISTER 210027	---	70 - 24.5
1	**1160281**	1 CUP - 7 gr	MAGISTER	AISI 430 ECONOMIC	70 - 24.5
2	**1160282**	2 CUPS - 14 gr	MAGISTER	AISI 430 ECONOMIC	70 - 25
3	**1160339**	BLIND - CIECO	MAGISTER	---	70 - 17

FILTRI CAFFE' MAGISTER "DI PRECISIONE"
PRECISION COFFEE FILTERS MAGISTER
PRÄZISIONSSIEBE MAGISTER
FILTROS CAFÉ DE PRECISIÓN MAGISTER

1

2

3

4 - ULTRAFINE

Photo	LF Code	Model	Suitable for	Notes	ø edge - height (H)	N° holes
1	**1460100**	1 CUP - 6/8 gr - H24.5	MAGISTER	---	70 - 24.5	177
1	**1460101**	1 CUP - 7/9 gr - H26.5	MAGISTER	---	70 - 26.5	253
2	**1460102**	2 CUPS - 12/18 gr - H24.5	MAGISTER	---	70 - 24.5	641
2	**1460103**	2 CUPS - 14/20 gr - H26.5	MAGISTER	---	70 - 26.5	641
3	**1460113**	2 CUPS - 12/18 gr - H24	MAGISTER	---	70 - 24	715
3	**1460114**	2 CUPS - 16/20 gr - H26	MAGISTER	---	70 - 26	715
3	**1460104**	3 CUPS - 18/22 gr - H28.5	MAGISTER	---	70 - 28.5	715
4	**1460400**	2 CUPS - 12/18 gr - H24	MAGISTER	ULTRAFINE MEMBRANE	70 - 24	565
4	**1460401**	2 CUPS - 14/20 gr - H26	MAGISTER	ULTRAFINE MEMBRANE	70 - 26	565
4	**1460402**	2 CUPS - 18/22 gr - H28	MAGISTER	ULTRAFINE MEMBRANE	70 - 28	565

Filtri progettati per ottenere la perfetta estrazione del caffè , acciaio Aisi 316 , certificati alimentare
Filters designed to obtain a perfect coffee brewing, Aisi 316 steel, food safe
Diese Siebe wurden für die perfekte Kaffeeextraktion hergestellt, Stahl Aisi 316, lebensmitteltauglich-zertifiziert
Filtros planeados para obtener la perfecta extracción del café, acero Aisi 316, certificados uso alimentario

FILTRI CAFFE' MAIRALI
COFFEE FILTERS MAIRALI
KAFFEESIEBE MAIRALI
FILTROS CAFÉ MAIRALI

1

2

3

4

Photo	LF Code	Model	Suitable for	Notes	ø edge - height (H)
1	**1160060**	1 CUP - 6 gr	MAIRALI 01441807	---	70 - 20.5
1	**1160062**	1 CUP - 7 gr	MAIRALI 02183002	---	70 - 24.5
2	**1160061**	2 CUPS - 12 gr	MAIRALI 01657501	---	70 - 21
2	**1160063**	2 CUPS - 14 gr	MAIRALI 02199404	---	70 - 24.5
3	**1160339**	BLIND - CIECO	MAIRALI 02190205	---	70 - 17
4	**1160503**	POD 1 CUP	MAIRALI 08365000	---	70 - 17
4	**1160504**	POD 2 CUPS	MAIRALI 08365100	---	70 - 21.5

FILTRI CAFFE' MAIRALI "DI PRECISIONE"
PRECISION COFFEE FILTERS MAIRALI
PRÄZISIONSSIEBE MAIRALI
FILTROS CAFÉ DE PRECISIÓN MAIRALI

1

2

3

4 - ULTRAFINE

Photo	LF Code	Model	Suitable for	Notes	ø edge - height (H)	N° holes
1	**1460100**	1 CUP - 6/8 gr - H24.5	MAIRALI	---	70 - 24.5	177
1	**1460101**	1 CUP - 7/9 gr - H26.5	MAIRALI	---	70 - 26.5	253
2	**1460102**	2 CUPS - 12/18 gr - H24.5	MAIRALI	---	70 - 24.5	641
2	**1460103**	2 CUPS - 14/20 gr - H26.5	MAIRALI	---	70 - 26.5	641
3	**1460113**	2 CUPS - 12/18 gr - H24	MAIRALI	---	70 - 24	715
3	**1460114**	2 CUPS - 16/20 gr - H26	MAIRALI	---	70 - 26	715
3	**1460104**	3 CUPS - 18/22 gr - H28.5	MAIRALI	---	70 - 28.5	715
4	**1460400**	2 CUPS - 12/18 gr - H24	MAIRALI	ULTRAFINE MEMBRANE	70 - 24	565
4	**1460401**	2 CUPS - 14/20 gr - H26	MAIRALI	ULTRAFINE MEMBRANE	70 - 26	565
4	**1460402**	2 CUPS - 18/22 gr - H28	MAIRALI	ULTRAFINE MEMBRANE	70 - 28	565

Filtri progettati per ottenere la perfetta estrazione del caffè , acciaio Aisi 316 , certificati alimentare
Filters designed to obtain a perfect coffee brewing, Aisi 316 steel, food safe
Diese Siebe wurden für die perfekte Kaffeeextraktion hergestellt, Stahl Aisi 316, lebensmitteltauglich-zertifiziert
Filtros planeados para obtener la perfecta extracción del café, acero Aisi 316, certificados uso alimentario

FILTRI CAFFE' MARCFI-ANCAS
COFFEE FILTERS MARCFI-ANCAS
KAFFEESIEBE MARCFI-ANCAS
FILTROS CAFÉ MARCFI-ANCAS

1

2

3

4

5

Photo	LF Code	Model	Suitable for	Notes	ø edge - height (H)
1	**1160251**	1 CUP - 6 gr	MARCFI-ANCAS BL-5231	---	70 - 20.5
1	**1160335**	1 CUP - 7 gr	MARCFI-ANCAS BJ-5344	---	70 - 24.5
1	**1160273**	1 CUP - 7 gr	MARCFI-ANCAS	---	66 - 22
1	**1160271**	1 CUP - 8 gr	MARCFI-ANCAS	---	66 - 21.4
2	**1160252**	2 CUPS - 12 gr	MARCFI-ANCAS BJ-5345	---	70 - 21
2	**1160337**	2 CUPS - 14 gr	MARCFI-ANCAS BM-5207	---	70 - 24.5
2	**1160270**	2 CUPS - 14 gr	MARCFI-ANCAS	---	66 - 25
3	**1160274**	2 CUPS - 16 gr	MARCFI-ANCAS	---	66 - 26.4
4	**1160339**	BLIND - CIECO	MARCFI-ANCAS BE-5347	---	70 - 17
5	**1160503**	POD 1 CUP	MARCFI-ANCAS	---	70 - 17
5	**1160504**	POD 2 CUPS	MARCFI-ANCAS	---	70 - 21.5

FILTRI CAFFE' MARZOCCO
COFFEE FILTERS MARZOCCO
KAFFEESIEBE MARZOCCO
FILTROS CAFÉ MARZOCCO

1

2

3

4

Photo	LF Code	Model	Suitable for	Notes	ø edge - height (H)
1	**1160025**	1 CUP - 7 gr	MARZOCCO L115/A	---	70 - 27
2	**1160336**	2 CUPS - 14 gr	MARZOCCO L116/A	---	70 - 26.5
2	**1160345**	2 CUPS - 18 gr	MARZOCCO 5.133	---	70 - 28
3	**1160019**	2 CUPS - 12 gr - H19	MARZOCCO 5.128	---	70 - 19
3	**1160018**	2 CUPS - H22	MARZOCCO 5.127	---	70 - 22
4	**1160339**	BLIND - CIECO	MARZOCCO L115/C	---	70 - 17

FILTRI CAFFE' MARZOCCO "DI PRECISIONE"
PRECISION COFFEE FILTERS MARZOCCO
PRÄZISIONSSIEBE MARZOCCO
FILTROS CAFÉ DE PRECISIÓN MARZOCCO

1

2

3

4 - ULTRAFINE

Photo	LF Code	Model	Suitable for	Notes	ø edge - height (H)	N° holes
1	**1460100**	1 CUP - 6/8 gr - H24.5	MARZOCCO	---	70 - 24.5	177
1	**1460101**	1 CUP - 7/9 gr - H26.5	MARZOCCO	---	70 - 26.5	253
2	**1460102**	2 CUPS - 12/18 gr - H24.5	MARZOCCO	---	70 - 24.5	641
2	**1460103**	2 CUPS - 14/20 gr - H26.5	MARZOCCO	---	70 - 26.5	641
3	**1460113**	2 CUPS - 12/18 gr - H24	MARZOCCO	---	70 - 24	715
3	**1460114**	2 CUPS - 16/20 gr - H26	MARZOCCO	---	70 - 26	715
3	**1460104**	3 CUPS - 18/22 gr - H28.5	MARZOCCO	---	70 - 28.5	715
4	**1460400**	2 CUPS - 12/18 gr - H24	MARZOCCO	ULTRAFINE MEMBRANE	70 - 24	565
4	**1460401**	2 CUPS - 14/20 gr - H26	MARZOCCO	ULTRAFINE MEMBRANE	70 - 26	565
4	**1460402**	2 CUPS - 18/22 gr - H28	MARZOCCO	ULTRAFINE MEMBRANE	70 - 28	565

Filtri progettati per ottenere la perfetta estrazione del caffè , acciaio Aisi 316 , certificati alimentare
Filters designed to obtain a perfect coffee brewing, Aisi 316 steel, food safe
Diese Siebe wurden für die perfekte Kaffeeextraktion hergestellt, Stahl Aisi 316, lebensmitteltauglich-zertifiziert
Filtros planeados para obtener la perfecta extracción del café, acero Aisi 316, certificados uso alimentario

FILTRI CAFFE' MCE
COFFEE FILTERS MCE
KAFFEESIEBE MCE
FILTROS CAFÉ MCE

1

2

3

4

Photo	LF Code	Model	Suitable for	Notes	ø edge - height (H)
1	**1160050**	1 CUP - 6 gr	MCE 27146	---	70 - 19.5
1	**1160052**	1 CUP - 7 gr	MCE 27142	---	70 - 24.5
2	**1160053**	2 CUPS - 14 gr	MCE 27171	---	70 - 24.5
3	**1160345**	2 CUPS - 18 gr	MCE 27190	---	70 - 28
4	**1160339**	BLIND - CIECO	MCE 27173	---	70 - 17

FILTRI CAFFE' NUOVA SIMONELLI
COFFEE FILTERS NUOVA SIMONELLI
KAFFEESIEBE NUOVA SIMONELLI
FILTROS CAFÉ NUOVA SIMONELLI

1

2

3

Photo	LF Code	Model	Suitable for	Notes	ø edge - height (H)
1	**1160070**	1 CUP - 6 gr	NUOVA SIMONELLI 03000321	---	70 - 21.5
1	**1160072**	1 CUP - 7 gr	NUOVA SIMONELLI 03000072 / 17000047	---	70 - 24
2	**1160071**	2 CUPS - 12 gr	NUOVA SIMONELLI 03000322	---	70 - 21.5
2	**1160053**	2 CUPS - 14 gr	NUOVA SIMONELLI 03000073 / 17000048	---	70 - 24.5
2	**1160345**	2 CUPS - 18 gr	NUOVA SIMONELLI	---	70 - 28
3	**1160339**	BLIND - CIECO	NUOVA SIMONELLI 03000107		70 - 17

FILTRI CAFFE' NUOVA SIMONELLI "DI PRECISIONE"
PRECISION COFFEE FILTERS NUOVA SIMONELLI
PRÄZISIONSSIEBE NUOVA SIMONELLI
FILTROS CAFÉ DE PRECISIÓN NUOVA SIMONELLI

1

2

3

4 - ULTRAFINE

Photo	LF Code	Model	Suitable for	Notes	ø edge - height (H)	N° holes
1	**1460100**	1 CUP - 6/8 gr - H24.5	NUOVA SIMONELLI	---	70 - 24.5	177
1	**1460101**	1 CUP - 7/9 gr - H26.5	NUOVA SIMONELLI	---	70 - 26.5	253
2	**1460102**	2 CUPS - 12/18 gr - H24.5	NUOVA SIMONELLI	---	70 - 24.5	641
2	**1460103**	2 CUPS - 14/20 gr - H26.5	NUOVA SIMONELLI	---	70 - 26.5	641
3	**1460113**	2 CUPS - 12/18 gr - H24	NUOVA SIMONELLI	---	70 - 24	715
3	**1460114**	2 CUPS - 16/20 gr - H26	NUOVA SIMONELLI	---	70 - 26	715
3	**1460104**	3 CUPS - 18/22 gr - H28.5	NUOVA SIMONELLI	---	70 - 28.5	715
4	**1460400**	2 CUPS - 12/18 gr - H24	NUOVA SIMONELLI	ULTRAFINE MEMBRANE	70 - 24	565
4	**1460401**	2 CUPS - 14/20 gr - H26	NUOVA SIMONELLI	ULTRAFINE MEMBRANE	70 - 26	565
4	**1460402**	2 CUPS - 18/22 gr - H28	NUOVA SIMONELLI	ULTRAFINE MEMBRANE	70 - 28	565

Filtri progettati per ottenere la perfetta estrazione del caffè , acciaio Aisi 316 , certificati alimentare
Filters designed to obtain a perfect coffee brewing, Aisi 316 steel, food safe
Diese Siebe wurden für die perfekte Kaffeeextraktion hergestellt, Stahl Aisi 316, lebensmitteltauglich-zertifiziert
Filtros planeados para obtener la perfecta extracción del café, acero Aisi 316, certificados uso alimentario

FILTRI CAFFE' ORCHESTRALE
COFFEE FILTERS ORCHESTRALE
KAFFEESIEBE ORCHESTRALE
FILTROS CAFÉ ORCHESTRALE

1

2

3

Photo	LF Code	Model	Suitable for	Notes	ø edge - height (H)
1	**1160050**	1 CUP - 6 gr	ORCHESTRALE D27146	---	70 - 19.5
1	**1160052**	1 CUP - 7 gr	ORCHESTRALE D27142	---	70 - 24.5
2	**1160053**	2 CUPS - 14 gr	ORCHESTRALE D27171	---	70 - 24.5
3	**1160339**	BLIND - CIECO	ORCHESTRALE D27173	---	70 - 17

FILTRI CAFFE' PAVONI
COFFEE FILTERS PAVONI
KAFFEESIEBE PAVONI
FILTROS CAFÉ PAVONI

1

2

3

4

5

6

Photo	LF Code	Model	Suitable for	Notes	ø edge - height (H)
1	**1160075**	1 CUP - 7 gr	PAVONI 327002	---	70 - 20
2	**1160076**	2 CUPS - 16 gr	PAVONI 327042	---	70 - 23
3	**1160339**	BLIND - CIECO	PAVONI 327081	---	70 - 17
4	**1160293**	BLIND EPDM - CIECO IN EPDM	PAVONI 371067	---	50
5	**1160009**	1 CUP	PAVONI 327011	EUROPICCOLA	58 - 22
5	**1160113**	1 CUP	PAVONI 327054 / 327057	EUROPICCOLA	60 - 20.5
6	**1160010**	2 CUPS	PAVONI 327051	EUROPICCOLA	58 - 24.5
6	**1160013**	2 CUPS	PAVONI 327053	EUROPICCOLA	60 - 25
6	**1160200**	2 CUPS	PAVONI 0P124650221	ESPRESSOPLUS	60 - 25.5
5	**1460052**	1 CUP	PAVONI 2272004	BUONDI	64 - 21.5
6	**1460053**	2 CUPS	PAVONI 2272003	BUONDI	64 - 24

FILTRI CAFFE' PAVONI "DI PRECISIONE"
PRECISION COFFEE FILTERS PAVONI
PRÄZISIONSSIEBE PAVONI
FILTROS CAFÉ DE PRECISIÓN PAVONI

1

2

3

4 - ULTRAFINE

Photo	LF Code	Model	Suitable for	Notes	ø edge - height (H)	N° holes
1	**1460100**	1 CUP - 6/8 gr - H24.5	PAVONI	---	70 - 24.5	177
1	**1460101**	1 CUP - 7/9 gr - H26.5	PAVONI	---	70 - 26.5	253
2	**1460102**	2 CUPS - 12/18 gr - H24.5	PAVONI	---	70 - 24.5	641
2	**1460103**	2 CUPS - 14/20 gr - H26.5	PAVONI	---	70 - 26.5	641
3	**1460113**	2 CUPS - 12/18 gr - H24	PAVONI	---	70 - 24	715
3	**1460114**	2 CUPS - 16/20 gr - H26	PAVONI	---	70 - 26	715
3	**1460104**	3 CUPS - 18/22 gr - H28.5	PAVONI	---	70 - 28.5	715
4	**1460400**	2 CUPS - 12/18 gr - H24	PAVONI	ULTRAFINE MEMBRANE	70 - 24	565
4	**1460401**	2 CUPS - 14/20 gr - H26	PAVONI	ULTRAFINE MEMBRANE	70 - 26	565
4	**1460402**	2 CUPS - 18/22 gr - H28	PAVONI	ULTRAFINE MEMBRANE	70 - 28	565

Filtri progettati per ottenere la perfetta estrazione del caffè , acciaio Aisi 316 , certificati alimentare
Filters designed to obtain a perfect coffee brewing, Aisi 316 steel, food safe
Diese Siebe wurden für die perfekte Kaffeeextraktion hergestellt, Stahl Aisi 316, lebensmitteltauglich-zertifiziert
Filtros planeados para obtener la perfecta extracción del café, acero Aisi 316, certificados uso alimentario

FILTRI CAFFE' PROMAC
COFFEE FILTERS PROMAC
KAFFEESIEBE PROMAC
FILTROS CAFÉ PROMAC

1

2

3

4

5

6

Photo	LF Code	Model	Suitable for	Notes	ø edge - height (H)
1	**1160251**	1 CUP - 6 gr	PROMAC 40100005	---	70 - 20.5
1	**1160530**	1 CUP - 7 gr	PROMAC 40100001	---	70 - 20
2	**1160252**	2 CUPS - 12 gr	PROMAC	---	70 - 21
3	**1160053**	2 CUPS - 14 gr	PROMAC 40100090	---	70 - 24.5
3	**1160529**	2 CUPS - 14 gr	PROMAC 40100010	---	70 - 22
4	**1160345**	3 CUPS - 18 gr	PROMAC 40100096	---	70 - 28
5	**1160339**	BLIND - CIECO	PROMAC 40100105	---	70 - 17
6	**1160293**	BLIND EPDM - CIECO IN EPDM	PROMAC 38123057	---	50

FILTRI CAFFE' PROMAC "DI PRECISIONE"
PRECISION COFFEE FILTERS PROMAC
PRÄZISIONSSIEBE PROMAC
FILTROS CAFÉ DE PRECISIÓN PROMAC

1

2

3

4 - ULTRAFINE

Photo	LF Code	Model	Suitable for	Notes	ø edge - height (H)	N° holes
1	**1460100**	1 CUP - 6/8 gr - H24.5	PROMAC	---	70 - 24.5	177
1	**1460101**	1 CUP - 7/9 gr - H26.5	PROMAC	---	70 - 26.5	253
2	**1460102**	2 CUPS - 12/18 gr - H24.5	PROMAC	---	70 - 24.5	641
2	**1460103**	2 CUPS - 14/20 gr - H26.5	PROMAC	---	70 - 26.5	641
3	**1460113**	2 CUPS - 12/18 gr - H24	PROMAC	---	70 - 24	715
3	**1460114**	2 CUPS - 16/20 gr - H26	PROMAC	---	70 - 26	715
3	**1460104**	3 CUPS - 18/22 gr - H28.5	PROMAC	---	70 - 28.5	715
4	**1460400**	2 CUPS - 12/18 gr - H24	PROMAC	ULTRAFINE MEMBRANE	70 - 24	565
4	**1460401**	2 CUPS - 14/20 gr - H26	PROMAC	ULTRAFINE MEMBRANE	70 - 26	565
4	**1460402**	2 CUPS - 18/22 gr - H28	PROMAC	ULTRAFINE MEMBRANE	70 - 28	565

Filtri progettati per ottenere la perfetta estrazione del caffè , acciaio Aisi 316 , certificati alimentare
Filters designed to obtain a perfect coffee brewing, Aisi 316 steel, food safe
Diese Siebe wurden für die perfekte Kaffeeextraktion hergestellt, Stahl Aisi 316, lebensmitteltauglich-zertifiziert
Filtros planeados para obtener la perfecta extracción del café, acero Aisi 316, certificados uso alimentario

FILTRI CAFFE' QUICK MILL
COFFEE FILTERS QUICK MILL
KAFFEESIEBE QUICK MILL
FILTROS CAFÉ QUICK MILL

1 2 3 4 5

Photo	LF Code	Model	Suitable for	Notes	ø edge - height (H)
1	**1160335**	1 CUP - 7 gr	QUICK MILL AC0970FI1	---	70 - 24.5
2	**1160337**	2 CUPS - 14 gr	QUICK MILL AC0970FI2	---	70 - 24.5
3	**1160339**	BLIND - CIECO	QUICK MILL AC0970FC	---	70 - 17
4	**1460007**	1 CUP	QUICK MILL AC0800FI1	---	68.5 - 24.5
5	**1460008**	2 CUPS	QUICK MILL AC0800FI2	---	68.5 - 24.5

FILTRI CAFFE' RANCILIO
COFFEE FILTERS RANCILIO
KAFFEESIEBE RANCILIO
FILTROS CAFÉ RANCILIO

1 2 3 4 5

Photo	LF Code	Model	Suitable for	Notes	ø edge - height (H)
1	**1160251**	1 CUP - 6 gr	RANCILIO 40100005	---	70 - 20.5
1	**1160530**	1 CUP - 7 gr	RANCILIO 40100001	---	70 - 20
2	**1160252**	2 CUPS - 12 gr	RANCILIO	---	70 - 21
2	**1160529**	2 CUPS - 14 gr	RANCILIO 40100010	---	70 - 22
2	**1160053**	2 CUPS - 14 gr	RANCILIO 40100090		70 - 24.5
2	**1160345**	2 CUPS - 18 gr	RANCILIO 40100096	---	70 - 28
3	**1160339**	BLIND - CIECO	RANCILIO 40100105	---	70 - 17
4	**1160293**	BLIND EPDM - CIECO IN EPDM	RANCILIO 38123057	---	50
5	**1160503**	POD 1 CUP	RANCILIO	---	70 - 17
5	**1160504**	POD 2 CUPS	RANCILIO	---	70 - 21.5

FILTRI CAFFE' RANCILIO "DI PRECISIONE"
PRECISION COFFEE FILTERS RANCILIO
PRÄZISIONSSIEBE RANCILIO
FILTROS CAFÉ DE PRECISIÓN RANCILIO

1

2

3

4 - ULTRAFINE

Photo	LF Code	Model	Suitable for	Notes	ø edge - height (H)	N° holes
1	**1460100**	1 CUP - 6/8 gr - H24.5	RANCILIO	---	70 - 24.5	177
1	**1460101**	1 CUP - 7/9 gr - H26.5	RANCILIO	---	70 - 26.5	253
2	**1460102**	2 CUPS - 12/18 gr - H24.5	RANCILIO	---	70 - 24.5	641
2	**1460103**	2 CUPS - 14/20 gr - H26.5	RANCILIO	---	70 - 26.5	641
3	**1460113**	2 CUPS - 12/18 gr - H24	RANCILIO	---	70 - 24	715
3	**1460114**	2 CUPS - 16/20 gr - H26	RANCILIO	---	70 - 26	715
3	**1460104**	3 CUPS - 18/22 gr - H28.5	RANCILIO	---	70 - 28.5	715
4	**1460400**	2 CUPS - 12/18 gr - H24	RANCILIO	ULTRAFINE MEMBRANE	70 - 24	565
4	**1460401**	2 CUPS - 14/20 gr - H26	RANCILIO	ULTRAFINE MEMBRANE	70 - 26	565
4	**1460402**	2 CUPS - 18/22 gr - H28	RANCILIO	ULTRAFINE MEMBRANE	70 - 28	565

Filtri progettati per ottenere la perfetta estrazione del caffè , acciaio Aisi 316 , certificati alimentare
Filters designed to obtain a perfect coffee brewing, Aisi 316 steel, food safe
Diese Siebe wurden für die perfekte Kaffeeextraktion hergestellt, Stahl Aisi 316, lebensmitteltauglich-zertifiziert
Filtros planeados para obtener la perfecta extracción del café, acero Aisi 316, certificados uso alimentario

FILTRI CAFFE' RENEKA
COFFEE FILTERS RENEKA
KAFFEESIEBE RENEKA
FILTROS CAFÉ RENEKA

1

2

3

4

5

Photo	LF Code	Model	Suitable for	Notes	ø edge - height (H)
1	**1160038**	1 CUP - 6 gr	RENEKA 9003961	---	67.5 - 20
1	**1160040**	1 CUP - 7 gr	RENEKA 9003957	---	67.5 - 20
1	**1160092**	1 CUP - 7 gr	RENEKA 9003943	---	67.5 - 19
1	**1160088**	1 CUP - 8 gr	RENEKA 9003946	---	67.5 - 22.5
1	**1160335**	1 CUP - 7 gr	RENEKA 9003937	DUO	70 - 24.5
2	**1160039**	2 CUPS - 12 gr	RENEKA 9003948	---	67.5 - 24.5
2	**1160041**	2 CUPS - 14 gr	RENEKA 9003958	---	67.5 - 22
2	**1160089**	2 CUPS - 16 gr	RENEKA 9004245	---	67.5 - 23
2	**1160090**	2 CUPS - 18 gr	RENEKA 9003949	---	67.5 - 27
2	**1160337**	2 CUPS - 14 gr	RENEKA 9003937	DUO	70 - 24.5
3	**1160030**	3 CUPS - 21 gr	RENEKA 9003939	---	67.5 - 30
4	**1160091**	POD 1 CUP	RENEKA 9003953	---	67.5 - 20
4	**1160503**	POD 1 CUP	RENEKA 9004223	DUO	70 - 14
1	**1160094**	1 CUP - 6 gr	RENEKA AT5471004	ATALANTE	70 - 22
1	**1160093**	1 CUP - 8 gr	RENEKA AT5471011	ATALANTE	70 - 19.5
2	**1160252**	2 CUPS - 12 gr	RENEKA AT5471007	ATALANTE	70 - 21
5	**1160339**	BLIND - CIECO	RENEKA AT5471003	ATALANTE	70 - 17

FILTRI CAFFE' RENEKA "DI PRECISIONE"
PRECISION COFFEE FILTERS RENEKA
PRÄZISIONSSIEBE RENEKA
FILTROS CAFÉ DE PRECISIÓN RENEKA

1

2

3

Photo	LF Code	Model	Suitable for	Notes	ø edge - height (H)	N° holes
1	**1460105**	1 CUP - 6/9 gr - H24.5	RENEKA	---	68 - 24.5	253
2	**1460106**	2 CUPS - 12/18 gr - H24.5	RENEKA	---	68 - 24.5	641
3	**1460107**	2 CUPS - 16/22 gr - H26.5	RENEKA	---	68 - 26.5	715

Filtri progettati per ottenere la perfetta estrazione del caffè , acciaio Aisi 316 , certificati alimentare
Filters designed to obtain a perfect coffee brewing, Aisi 316 steel, food safe
Diese Siebe wurden für die perfekte Kaffeeextraktion hergestellt, Stahl Aisi 316, lebensmitteltauglich-zertifiziert
Filtros planeados para obtener la perfecta extracción del café, acero Aisi 316, certificados uso alimentario

FILTRI CAFFE' ROYAL
COFFEE FILTERS ROYAL
KAFFEESIEBE ROYAL
FILTROS CAFÉ ROYAL

1

2

3

4

Photo	LF Code	Model	Suitable for	Notes	ø edge - height (H)
1	**1160251**	1 CUP - 6 gr	ROYAL	---	70 - 20.5
1	**1160335**	1 CUP - 7 gr	ROYAL 4630051	---	70 - 24.5
2	**1160252**	2 CUPS - 12 gr	ROYAL	---	70 - 21
2	**1160337**	2 CUPS - 14 gr	ROYAL 4630052	---	70 - 24.5
1	**1160281**	1 CUP - 7 gr	ROYAL	AISI 430 ECONOMIC	70 - 24.5
2	**1160282**	2 CUPS - 14 gr	ROYAL	AISI 430 ECONOMIC	70 - 25
3	**1160339**	BLIND - CIECO	ROYAL 4630100	---	70 - 17
4	**1160025**	1 CUP - 7 gr	ROYAL 4630070	VALLELUNGA LEVA	70 - 27
4	**1160345**	2 CUPS - 18 gr	ROYAL 4630078	VALLELUNGA LEVA	70 - 28

FILTRI CAFFE' ROYAL "DI PRECISIONE"
PRECISION COFFEE FILTERS ROYAL
PRÄZISIONSSIEBE ROYAL
FILTROS CAFÉ DE PRECISIÓN ROYAL

1

2

3

4 - ULTRAFINE

Photo	LF Code	Model	Suitable for	Notes	ø edge - height (H)	N° holes
1	**1460100**	1 CUP - 6/8 gr - H24.5	ROYAL	---	70 - 24.5	177
1	**1460101**	1 CUP - 7/9 gr - H26.5	ROYAL	---	70 - 26.5	253
2	**1460102**	2 CUPS - 12/18 gr - H24.5	ROYAL	---	70 - 24.5	641
2	**1460103**	2 CUPS - 14/20 gr - H26.5	ROYAL	---	70 - 26.5	641
3	**1460113**	2 CUPS - 12/18 gr - H24	ROYAL	---	70 - 24	715
3	**1460114**	2 CUPS - 16/20 gr - H26	ROYAL	---	70 - 26	715
3	**1460104**	3 CUPS - 18/22 gr - H28.5	ROYAL	---	70 - 28.5	715
4	**1460400**	2 CUPS - 12/18 gr - H24	ROYAL	ULTRAFINE MEMBRANE	70 - 24	565
4	**1460401**	2 CUPS - 14/20 gr - H26	ROYAL	ULTRAFINE MEMBRANE	70 - 26	565
4	**1460402**	2 CUPS - 18/22 gr - H28	ROYAL	ULTRAFINE MEMBRANE	70 - 28	565

Filtri progettati per ottenere la perfetta estrazione del caffè , acciaio Aisi 316 , certificati alimentare
Filters designed to obtain a perfect coffee brewing, Aisi 316 steel, food safe
Diese Siebe wurden für die perfekte Kaffeeextraktion hergestellt, Stahl Aisi 316, lebensmitteltauglich-zertifiziert
Filtros planeados para obtener la perfecta extracción del café, acero Aisi 316, certificados uso alimentario

FILTRI CAFFE' SAB ITALIA
COFFEE FILTERS SAB ITALIA
KAFFEESIEBE SAB ITALIA
FILTROS CAFÉ SAB ITALIA

1

2

3

Photo	LF Code	Model	Suitable for	Notes	ø edge - height (H)
1	**1160251**	1 CUP - 6 gr	SAB ITALIA SVTMF012	---	70 - 20.5
1	**1160335**	1 CUP - 7 gr	SAB ITALIA SVTMF002	---	70 - 24.5
2	**1160252**	2 CUPS - 12 gr	SAB ITALIA SVTMF011	---	70 - 21
2	**1160337**	2 CUPS - 14 gr	SAB ITALIA SVTMF003	---	70 - 24.5
1	**1160281**	1 CUP - 7 gr	SAB ITALIA	AISI 430 ECONOMIC	70 - 24.5
2	**1160282**	2 CUPS - 14 gr	SAB ITALIA	AISI 430 ECONOMIC	70 - 25
3	**1160339**	BLIND - CIECO	SAB ITALIA SVTMF004	---	70 - 17

FILTRI CAFFE' SAB ITALIA "DI PRECISIONE"
PRECISION COFFEE FILTERS SAB ITALIA
PRÄZISIONSSIEBE SAB ITALIA
FILTROS CAFÉ DE PRECISIÓN SAB ITALIA

1

2

3

4 - ULTRAFINE

Photo	LF Code	Model	Suitable for	Notes	ø edge - height (H)	N° holes
1	**1460100**	1 CUP - 6/8 gr - H24.5	SAB ITALIA	---	70 - 24.5	177
1	**1460101**	1 CUP - 7/9 gr - H26.5	SAB ITALIA	---	70 - 26.5	253
2	**1460102**	2 CUPS - 12/18 gr - H24.5	SAB ITALIA	---	70 - 24.5	641
2	**1460103**	2 CUPS - 14/20 gr - H26.5	SAB ITALIA	---	70 - 26.5	641
3	**1460113**	2 CUPS - 12/18 gr - H24	SAB ITALIA	---	70 - 24	715
3	**1460114**	2 CUPS - 16/20 gr - H26	SAB ITALIA	---	70 - 26	715
3	**1460104**	3 CUPS - 18/22 gr - H28.5	SAB ITALIA	---	70 - 28.5	715
4	**1460400**	2 CUPS - 12/18 gr - H24	SAB ITALIA	ULTRAFINE MEMBRANE	70 - 24	565
4	**1460401**	2 CUPS - 14/20 gr - H26	SAB ITALIA	ULTRAFINE MEMBRANE	70 - 26	565
4	**1460402**	2 CUPS - 18/22 gr - H28	SAB ITALIA	ULTRAFINE MEMBRANE	70 - 28	565

Filtri progettati per ottenere la perfetta estrazione del caffè , acciaio Aisi 316 , certificati alimentare
Filters designed to obtain a perfect coffee brewing, Aisi 316 steel, food safe
Diese Siebe wurden für die perfekte Kaffeeextraktion hergestellt, Stahl Aisi 316, lebensmitteltauglich-zertifiziert
Filtros planeados para obtener la perfecta extracción del café, acero Aisi 316, certificados uso alimentario

FILTRI CAFFE' SAECO
COFFEE FILTERS SAECO
KAFFEESIEBE SAECO
FILTROS CAFÉ SAECO

1

2

3

Photo	LF Code	Model	Suitable for	Notes	ø edge - height (H)
1	**1160261**	1 CUP - 7 gr	SAECO WGANF08/004/B / NF08/004	---	68 - 24.5
2	**1160262**	2 CUPS - 14 gr	SAECO WGANF08/005/B / NF08/005	---	68 - 24.5
3	**1160339**	BLIND - CIECO	SAECO WGANF08/006	---	70 - 17

FILTRI CAFFE' SAECO
COFFEE FILTERS SAECO
KAFFEESIEBE SAECO
FILTROS CAFÉ SAECO

1

2

3

4

Photo	LF Code	Model	Suitable for	Notes	ø edge - height (H)
1	**1460013**	1 CUP	SAECO 11011693	NINA	68 - 27
2	**1460012**	2 CUPS	SAECO 11007038	NINA	68 - 27
3	**1160199**	1 CUP	SAECO 124653221	AROMA	60 - 20
4	**1160200**	2 CUPS	SAECO 124650221	AROMA	60 - 25.5

FILTRI CAFFE' SAN MARCO
COFFEE FILTERS SAN MARCO
KAFFEESIEBE SAN MARCO
FILTROS CAFÉ SAN MARCO

1

2

3

Photo	LF Code	Model	Suitable for	Notes	ø edge - height (H)
1	**1160033**	1 CUP - 6 gr	SAN MARCO 202108	---	66 - 21
1	**1160273**	1 CUP - 7 gr	SAN MARCO 202116	---	66 - 22
1	**1160271**	1 CUP - 8 gr	SAN MARCO 202110	---	66 - 21.4
2	**1160044**	2 CUPS - 9 gr	SAN MARCO 202119	---	66 - 25
2	**5069283**	2 CUPS - 9 gr	SAN MARCO 202122	---	66 - 25.5
2	**1160133**	2 CUPS - 12 gr	SAN MARCO 202112	---	66 - 24
2	**1160270**	2 CUPS - 14 gr	SAN MARCO 202117	---	66 - 25
2	**1160274**	2 CUPS - 16 gr	SAN MARCO 202114	---	66 - 26.4
2	**1160045**	2 CUPS - 18 gr	SAN MARCO 202121	---	66 - 28.5
2	**1160046**	2 CUPS - 21 gr	SAN MARCO 202118	---	66 - 32
3	**1160287**	BLIND - CIECO	SAN MARCO 202115	---	66 - 22

FILTRI CAFFE' SAN MARCO "DI PRECISIONE"
PRECISION COFFEE FILTERS SAN MARCO
PRÄZISIONSSIEBE SAN MARCO
FILTROS CAFÉ DE PRECISIÓN SAN MARCO

1

2

3

Photo	LF Code	Model	Suitable for	Notes	ø edge - height (H)	N° holes
1	**1460108**	1 CUP - 6/9 gr - H25	SAN MARCO	---	66 - 25	293
2	**1460109**	2 CUPS - 14/18 gr - H26	SAN MARCO	---	66 - 26	641
3	**1460115**	2 CUPS - 18/20 gr - H32	SAN MARCO	---	66 - 32	641

Filtri progettati per ottenere la perfetta estrazione del caffè , acciaio Aisi 316 , certificati alimentare
Filters designed to obtain a perfect coffee brewing, Aisi 316 steel, food safe
Diese Siebe wurden für die perfekte Kaffeeextraktion hergestellt, Stahl Aisi 316, lebensmitteltauglich-zertifiziert
Filtros planeados para obtener la perfecta extracción del café, acero Aisi 316, certificados uso alimentario

FILTRI CAFFE' SANREMO
COFFEE FILTERS SANREMO
KAFFEESIEBE SANREMO
FILTROS CAFÉ SANREMO

1

2

3

4

Photo	LF Code	Model	Suitable for	Notes	ø edge - height (H)
1	**1160251**	1 CUP - 6 gr	SANREMO 10052100	---	70 - 20.5
1	**1160335**	1 CUP - 7 gr	SANREMO 10052076	---	70 - 24.5
2	**1160252**	2 CUPS - 12 gr	SANREMO 10052110	---	70 - 21
2	**1160337**	2 CUPS - 14 gr	SANREMO	---	70 - 24.5
3	**1160345**	3 CUPS - 18 gr	SANREMO 10052084	---	70 - 28
1	**1160281**	1 CUP - 7 gr	SANREMO	AISI 430 ECONOMIC	70 - 24.5
2	**1160282**	2 CUPS - 14 gr	SANREMO	AISI 430 ECONOMIC	70 - 25
4	**1160339**	BLIND - CIECO	SANREMO 10052220	---	70 - 17

FILTRI CAFFE' SANREMO "DI PRECISIONE"
PRECISION COFFEE FILTERS SANREMO
PRÄZISIONSSIEBE SANREMO
FILTROS CAFÉ DE PRECISIÓN SANREMO

1

2

3

4 - ULTRAFINE

Photo	LF Code	Model	Suitable for	Notes	ø edge - height (H)	N° holes
1	**1460100**	1 CUP - 6/8 gr - H24.5	SANREMO	---	70 - 24.5	177
1	**1460101**	1 CUP - 7/9 gr - H26.5	SANREMO	---	70 - 26.5	253
2	**1460102**	2 CUPS - 12/18 gr - H24.5	SANREMO	---	70 - 24.5	641
2	**1460103**	2 CUPS - 14/20 gr - H26.5	SANREMO	---	70 - 26.5	641
3	**1460113**	2 CUPS - 12/18 gr - H24	SANREMO	OPERA	70 - 24	715
3	**1460114**	2 CUPS - 14/20 gr - H26	SANREMO	OPERA	70 - 26	715
3	**1460104**	3 CUPS - 18/22 gr - H28.5	SANREMO	---	70 - 28.5	715
4	**1460400**	2 CUPS - 12/18 gr - H24	SANREMO	ULTRAFINE MEMBRANE	70 - 24	565
4	**1460401**	2 CUPS - 14/20 gr - H26	SANREMO	ULTRAFINE MEMBRANE	70 - 26	565
4	**1460402**	2 CUPS - 18/22 gr - H28	SANREMO	ULTRAFINE MEMBRANE	70 - 28	565

Filtri progettati per ottenere la perfetta estrazione del caffè , acciaio Aisi 316 , certificati alimentare
Filters designed to obtain a perfect coffee brewing, Aisi 316 steel, food safe
Diese Siebe wurden für die perfekte Kaffeeextraktion hergestellt, Stahl Aisi 316, lebensmitteltauglich-zertifiziert
Filtros planeados para obtener la perfecta extracción del café, acero Aisi 316, certificados uso alimentario

FILTRI CAFFE' SCALA
COFFEE FILTERS SCALA
KAFFEESIEBE SCALA
FILTROS CAFÉ SCALA

1

2

3

Photo	LF Code	Model	Suitable for	Notes	ø edge - height (H)
1	**1160251**	1 CUP - 6 gr	SCALA C-0498	---	70 - 20.5
1	**1160335**	1 CUP - 7 gr	SCALA C-0499	---	70 - 24.5
2	**1160252**	2 CUPS - 12 gr	SCALA C-0500	---	70 - 21
2	**1160337**	2 CUPS - 14 gr	SCALA C-0501	---	70 - 24.5
1	**1160281**	1 CUP - 7 gr	SCALA	AISI 430 ECONOMIC	70 - 24.5
2	**1160282**	2 CUPS - 14 gr	SCALA	AISI 430 ECONOMIC	70 - 25
3	**1160339**	BLIND - CIECO	SCALA C-0495	---	70 - 17

FILTRI CAFFE' SCALA "DI PRECISIONE"
PRECISION COFFEE FILTERS SCALA
PRÄZISIONSSIEBE SCALA
FILTROS CAFÉ DE PRECISIÓN SCALA

1

2

3

4 - ULTRAFINE

Photo	LF Code	Model	Suitable for	Notes	ø edge - height (H)	N° holes
1	**1460100**	1 CUP - 6/8 gr - H24.5	SCALA	---	70 - 24.5	177
1	**1460101**	1 CUP - 7/9 gr - H26.5	SCALA	---	70 - 26.5	253
2	**1460102**	2 CUPS - 12/18 gr - H24.5	SCALA	---	70 - 24.5	641
2	**1460103**	2 CUPS - 14/20 gr - H26.5	SCALA	---	70 - 26.5	641
3	**1460113**	2 CUPS - 12/18 gr - H24	SCALA	---	70 - 24	715
3	**1460114**	2 CUPS - 16/20 gr - H26	SCALA	---	70 - 26	715
3	**1460104**	3 CUPS - 18/22 gr - H28.5	SCALA	---	70 - 28.5	715
4	**1460400**	2 CUPS - 12/18 gr - H24	SCALA	ULTRAFINE MEMBRANE	70 - 24	565
4	**1460401**	2 CUPS - 14/20 gr - H26	SCALA	ULTRAFINE MEMBRANE	70 - 26	565
4	**1460402**	2 CUPS - 18/22 gr - H28	SCALA	ULTRAFINE MEMBRANE	70 - 28	565

Filtri progettati per ottenere la perfetta estrazione del caffè , acciaio Aisi 316 , certificati alimentare
Filters designed to obtain a perfect coffee brewing, Aisi 316 steel, food safe
Diese Siebe wurden für die perfekte Kaffeeextraktion hergestellt, Stahl Aisi 316, lebensmitteltauglich-zertifiziert
Filtros planeados para obtener la perfecta extracción del café, acero Aisi 316, certificados uso alimentario

FILTRI CAFFE' SPAZIALE
COFFEE FILTERS SPAZIALE
KAFFEESIEBE SPAZIALE
FILTROS CAFÉ SPAZIALE

1

2

3

Photo	LF Code	Model	Suitable for	Notes	ø edge - height (H)
1	**1160080**	1 CUP - 6 gr	SPAZIALE 01945	---	65 - 23
1	**1160276**	1 CUP - 7 gr	SPAZIALE 00646	---	65 - 25
2	**1160081**	2 CUPS - 12 gr	SPAZIALE 01943	---	65 - 25.5
2	**1160277**	2 CUPS - 14 gr	SPAZIALE 00645	---	65 - 27.5
3	**1160278**	BLIND - CIECO	SPAZIALE 00647	---	65 - 25

FILTRI CAFFE' SPAZIALE "DI PRECISIONE"
PRECISION COFFEE FILTERS SPAZIALE
PRÄZISIONSSIEBE SPAZIALE
FILTROS CAFÉ DE PRECISIÓN SPAZIALE

1

2

Photo	LF Code	Model	Suitable for	Notes	ø edge - height (H)	N° holes
1	**1460110**	1 CUP - 6/9 gr - H25	SPAZIALE	---	65 - 25	253
2	**1460111**	2 CUPS - 12/18 gr - H27.5	SPAZIALE	---	65 - 27.5	641

Filtri progettati per ottenere la perfetta estrazione del caffè , acciaio Aisi 316 , certificati alimentare
Filters designed to obtain a perfect coffee brewing, Aisi 316 steel, food safe
Diese Siebe wurden für die perfekte Kaffeeextraktion hergestellt, Stahl Aisi 316, lebensmitteltauglich-zertifiziert
Filtros planeados para obtener la perfecta extracción del café, acero Aisi 316, certificados uso alimentario

FILTRI CAFFE' SYNESSO
COFFEE FILTERS SYNESSO
KAFFEEFILTER SYNESSO
FILTROS CAFÉ SYNESSO

1

2

3

Photo	LF Code	Model	Suitable for	Notes	ø edge - height (H)
1	**1160047**	2 CUPS - 14 gr	SYNESSO	---	70 - 24.5
2	**1160099**	2 CUPS - 18 gr	SYNESSO	---	70 - 28
3	**1160048**	3 CUPS - 18 gr	SYNESSO	---	70 - 28

FILTRI CAFFE' SYNESSO "DI PRECISIONE"
"PRECISION" COFFEE FILTERS SYNESSO
KAFFEEFILTER SYNESSO "PRÄZISION"
FILTROS CAFÉ SYNESSO "DE PRECISIÓN"

1

2

3

4 - ULTRAFINE

5 - ULTRAFINE

6 - ULTRAFINE

Photo	LF Code	Model	Suitable for	Notes	ø edge - height (H)	N° holes
1	**1460100**	1 CUP - 6/8 gr - H24.5	SYNESSO	---	70 - 24.5	177
1	**1460101**	1 CUP - 7/9 gr - H26.5	SYNESSO	---	70 - 26.5	253
2	**1460102**	2 CUPS - 12/18 gr - H24.5	SYNESSO	---	70 - 24.5	641
2	**1460103**	2 CUPS - 14/20 gr - H26.5	SYNESSO	---	70 - 26.5	641
3	**1460113**	2 CUPS - 12/18 gr - H24	SYNESSO	---	70 - 24	715
3	**1460114**	2 CUPS - 16/20 gr - H26	SYNESSO	---	70 - 26	715
3	**1460104**	3 CUPS - 18/22 gr - H28.5	SYNESSO	---	70 - 28.5	715
4	**1460400**	2 CUPS - 12/18 gr - H24	SYNESSO	ULTRAFINE MEMBRANE	70 - 24	565
5	**1460401**	2 CUPS - 14/20 gr - H26	SYNESSO	ULTRAFINE MEMBRANE	70 - 26	565
6	**1460402**	2 CUPS - 18/22 gr - H28	SYNESSO	ULTRAFINE MEMBRANE	70 - 28	565

Filtri progettati per ottenere la perfetta estrazione del caffè , acciaio Aisi 316 , certificati alimentare
Filters designed to obtain a perfect coffee brewing, Aisi 316 steel, food safe
Diese Siebe wurden für die perfekte Kaffeeextraktion hergestellt, Stahl Aisi 316, lebensmitteltauglich-zertifiziert
Filtros planeados para obtener la perfecta extracción del café, acero Aisi 316, certificados uso alimentario

FILTRI CAFFE' UNIC
COFFEE FILTERS UNIC
KAFFEESIEBE UNIC
FILTROS CAFÉ UNIC

1

2

3

Photo	LF Code	Model	Suitable for	Notes	ø edge - height (H)
1	**1160291**	1 CAP	UNIC	---	68 - 22
2	**1160292**	2 CAPS	UNIC	---	68 - 24
3	**1160503**	POD 1 CUP	UNIC	---	70 - 12
3	**1160504**	POD 2 CUPS	UNIC	---	70 - 21.5

FILTRI CAFFE' VFA
COFFEE FILTERS VFA
KAFFEESIEBE VFA
FILTROS CAFÉ VFA

1

2

3

Photo	LF Code	Model	Suitable for	Notes	ø edge - height (H)
1	**1160251**	1 CUP - 6 gr	VFA 514358	---	70 - 20.5
1	**1160335**	1 CUP - 7 gr	VFA E514358	---	70 - 24.5
2	**1160252**	2 CUPS - 12 gr	VFA 514357	---	70 - 21
2	**1160337**	2 CUPS - 14 gr	VFA E514357	---	70 - 24.5
1	**1160281**	1 CUP - 7 gr	VFA	AISI 430 ECONOMIC	70 - 24.5
2	**1160282**	2 CUPS - 14 gr	VFA	AISI 430 ECONOMIC	70 - 25
3	**1160339**	BLIND - CIECO	VFA 514461	---	70 - 17

FILTRI CAFFE' VFA "DI PRECISIONE"
PRECISION COFFEE FILTERS VFA
PRÄZISIONSSIEBE VFA
FILTROS CAFÉ DE PRECISIÓN VFA

1

2

3

Photo	LF Code	Model	Suitable for	Notes	ø edge - height (H)	N° holes
1	**1460100**	1 CUP - 6/8 gr - H24.5	VFA	---	70 - 24.5	177
1	**1460101**	1 CUP - 7/9 gr - H26.5	VFA	---	70 - 26.5	253
2	**1460102**	2 CUPS - 12/18 gr - H24.5	VFA	---	70 - 24.5	641
2	**1460103**	2 CUPS - 14/20 gr - H26.5	VFA	---	70 - 26.5	641
3	**1460113**	2 CUPS - 12/18 gr - H24	VFA	---	70 - 24	715
3	**1460114**	2 CUPS - 16/20 gr - H26	VFA	---	70 - 26	715
3	**1460104**	3 CUPS - 18/22 gr - H28.5	VFA	---	70 - 28.5	715

Filtri progettati per ottenere la perfetta estrazione del caffè , acciaio Aisi 316 , certificati alimentare
Filters designed to obtain a perfect coffee brewing, Aisi 316 steel, food safe
Diese Siebe wurden für die perfekte Kaffeeextraktion hergestellt, Stahl Aisi 316, lebensmitteltauglich-zertifiziert
Filtros planeados para obtener la perfecta extracción del café, acero Aisi 316, certificados uso alimentario

FILTRI CAFFE' VIBIEMME
COFFEE FILTERS VIBIEMME
KAFFEESIEBE VIBIEMME
FILTROS CAFÉ VIBIEMME

1

2

3

Photo	LF Code	Model	Suitable for	Notes	ø edge - height (H)
1	**1160251**	1 CUP - 6 gr	VIBIEMME FILT1TB	---	70 - 20.5
1	**1160335**	1 CUP - 7 gr	VIBIEMME FILT1TA	---	70 - 24.5
2	**1160252**	2 CUPS - 12 gr	VIBIEMME FILT2TB	---	70 - 21
2	**1160337**	2 CUPS - 14 gr	VIBIEMME FILT2TA	---	70 - 24.5
1	**1160281**	1 CUP - 7 gr	VIBIEMME	AISI 430 ECONOMIC	70 - 24.5
2	**1160282**	2 CUPS - 14 gr	VIBIEMME	AISI 430 ECONOMIC	70 - 25
3	**1160339**	BLIND - CIECO	VIBIEMME FILTCI	---	70 - 17

FILTRI CAFFE' VIBIEMME "DI PRECISIONE"
PRECISION COFFEE FILTERS VIBIEMME
PRÄZISIONSSIEBE VIBIEMME
FILTROS CAFÉ DE PRECISIÓN VIBIEMME

1

2

3

4 - ULTRAFINE

Photo	LF Code	Model	Suitable for	Notes	ø edge - height (H)	N° holes
1	**1460100**	1 CUP - 6/8 gr - H24.5	VIBIEMME	---	70 - 24.5	177
1	**1460101**	1 CUP - 7/9 gr - H26.5	VIBIEMME	---	70 - 26.5	253
2	**1460102**	2 CUPS - 12/18 gr - H24.5	VIBIEMME	---	70 - 24.5	641
2	**1460103**	2 CUPS - 14/20 gr - H26.5	VIBIEMME	---	70 - 26.5	641
3	**1460113**	2 CUPS - 12/18 gr - H24	VIBIEMME	---	70 - 24	715
3	**1460114**	2 CUPS - 16/20 gr - H26	VIBIEMME	---	70 - 26	715
3	**1460104**	3 CUPS - 18/22 gr - H28.5	VIBIEMME	---	70 - 28.5	715
4	**1460400**	2 CUPS - 12/18 gr - H24	VIBIEMME	ULTRAFINE MEMBRANE	70 - 24	565
4	**1460401**	2 CUPS - 14/20 gr - H26	VIBIEMME	ULTRAFINE MEMBRANE	70 - 26	565
4	**1460402**	2 CUPS - 18/22 gr - H28	VIBIEMME	ULTRAFINE MEMBRANE	70 - 28	565

Filtri progettati per ottenere la perfetta estrazione del caffè , acciaio Aisi 316 , certificati alimentare
Filters designed to obtain a perfect coffee brewing, Aisi 316 steel, food safe
Diese Siebe wurden für die perfekte Kaffeeextraktion hergestellt, Stahl Aisi 316, lebensmitteltauglich-zertifiziert
Filtros planeados para obtener la perfecta extracción del café, acero Aisi 316, certificados uso alimentario

FILTRI CAFFE' VICTORIA ARDUINO
COFFEE FILTERS VICTORIA ARDUINO
KAFFEESIEBE VICTORIA ARDUINO
FILTROS CAFÉ VICTORIA ARDUINO

1

2

3

Photo	LF Code	Model	Suitable for	Notes	ø edge - height (H)
1	**1160070**	1 CUP - 6 gr	VICTORIA ARDUINO 03000321	---	70 - 21.5
1	**1160530**	1 CUP - 6 gr	VICTORIA ARDUINO 03000183	---	70 - 20
1	**1160072**	1 CUP - 7 gr	VICTORIA ARDUINO 03000072 / 17000047	---	70 - 24
1	**1160335**	1 CUP - 7 gr	VICTORIA ARDUINO 40300029	---	70 - 24.5
1	**1160530**	1 CUP - 7 gr	VICTORIA ARDUINO 03000183	---	70 - 20
2	**1160071**	2 CUPS - 12 gr	VICTORIA ARDUINO 03000322	---	70 - 21.5
2	**1160252**	2 CUPS - 12 gr	VICTORIA ARDUINO 03000184	---	70 - 21
2	**1160053**	2 CUPS - 14 gr	VICTORIA ARDUINO 03000073 / 17000048	---	70 - 24.5
2	**1160337**	2 CUPS - 14 gr	VICTORIA ARDUINO 40300030	---	70 - 24.5
3	**1160339**	BLIND - CIECO	VICTORIA ARDUINO 03000107	---	70 - 17

FILTRI CAFFE' VICTORIA ARDUINO "PRECISIONE"
PRECISION COFFEE FILTERS VICTORIA ARDUINO
PRÄZISIONSSIEBE VICTORIA ARDUINO
FILTROS CAFÉ DE PRECISIÓN VICTORIA ARDUINO

1

2

3

4 - ULTRAFINE

Photo	LF Code	Model	Suitable for	Notes	ø edge - height (H)	N° holes
1	**1460100**	1 CUP - 6/8 gr - H24.5	VICTORIA ARDUINO	---	70 - 24.5	177
1	**1460101**	1 CUP - 7/9 gr - H26.5	VICTORIA ARDUINO	---	70 - 26.5	253
2	**1460102**	2 CUPS - 12/18 gr - H24.5	VICTORIA ARDUINO	---	70 - 24.5	641
2	**1460103**	2 CUPS - 14/20 gr - H26.5	VICTORIA ARDUINO	---	70 - 26.5	641
3	**1460113**	2 CUPS - 12/18 gr - H24	VICTORIA ARDUINO	---	70 - 24	715
3	**1460114**	2 CUPS - 16/20 gr - H26	VICTORIA ARDUINO	---	70 - 26	715
3	**1460104**	3 CUPS - 18/22 gr - H28.5	VICTORIA ARDUINO	---	70 - 28.5	715
4	**1460400**	2 CUPS - 12/18 gr - H24	VICTORIA ARDUINO	ULTRAFINE MEMBRANE	70 - 24	565
4	**1460401**	2 CUPS - 14/20 gr - H26	VICTORIA ARDUINO	ULTRAFINE MEMBRANE	70 - 26	565
4	**1460402**	2 CUPS - 18/22 gr - H28	VICTORIA ARDUINO	ULTRAFINE MEMBRANE	70 - 28	565

Filtri progettati per ottenere la perfetta estrazione del caffè , acciaio Aisi 316 , certificati alimentare
Filters designed to obtain a perfect coffee brewing, Aisi 316 steel, food safe
Diese Siebe wurden für die perfekte Kaffeeextraktion hergestellt, Stahl Aisi 316, lebensmitteltauglich-zertifiziert
Filtros planeados para obtener la perfecta extracción del café, acero Aisi 316, certificados uso alimentario

FILTRI CAFFE' VISACREM
COFFEE FILTERS VISACREM
KAFFEESIEBE VISACREM
FILTROS CAFÉ VISACREM

1

2

3

Photo	LF Code	Model	Suitable for	Notes	ø edge - height (H)
1	**1160060**	1 CUP - 6 gr	VISACREM 01441807	---	70 - 20.5
1	**1160062**	1 CUP - 7 gr	VISACREM 02183002	---	70 - 24.5
2	**1160061**	2 CUPS - 12 gr	VISACREM 01657501	---	70 - 21
2	**1160063**	2 CUPS - 14 gr	VISACREM 02199404	---	70 - 24.5
3	**1160339**	BLIND - CIECO	VISACREM 02190205	---	70 - 17

FILTRI CAFFE' VISACREM "PRECISIONE"
PRECISION COFFEE FILTERS VISACREM
PRÄZISIONSSIEBE VISACREM
FILTROS CAFÉ DE PRECISIÓN VISACREM

1

2

3

4 - ULTRAFINE

Photo	LF Code	Model	Suitable for	Notes	ø edge - height (H)	N° holes
1	**1460100**	1 CUP - 6/8 gr - H24.5	VISACREM	---	70 - 24.5	177
1	**1460101**	1 CUP - 7/9 gr - H26.5	VISACREM	---	70 - 26.5	253
2	**1460102**	2 CUPS - 12/18 gr - H24.5	VISACREM	---	70 - 24.5	641
2	**1460103**	2 CUPS - 14/20 gr - H26.5	VISACREM	---	70 - 26.5	641
3	**1460113**	2 CUPS - 12/18 gr - H24	VISACREM	---	70 - 24	715
3	**1460114**	2 CUPS - 16/20 gr - H26	VISACREM	---	70 - 26	715
3	**1460104**	3 CUPS - 18/22 gr - H28.5	VISACREM	---	70 - 28.5	715
4	**1460400**	2 CUPS - 12/18 gr - H24	VISACREM	ULTRAFINE MEMBRANE	70 - 24	565
4	**1460401**	2 CUPS - 14/20 gr - H26	VISACREM	ULTRAFINE MEMBRANE	70 - 26	565
4	**1460402**	2 CUPS - 18/22 gr - H28	VISACREM	ULTRAFINE MEMBRANE	70 - 28	565

Filtri progettati per ottenere la perfetta estrazione del caffè , acciaio Aisi 316 , certificati alimentare
Filters designed to obtain a perfect coffee brewing, Aisi 316 steel, food safe
Diese Siebe wurden für die perfekte Kaffeeextraktion hergestellt, Stahl Aisi 316, lebensmitteltauglich-zertifiziert
Filtros planeados para obtener la perfecta extracción del café, acero Aisi 316, certificados uso alimentario

FILTRI CAFFE' WEGA
COFFEE FILTERS WEGA
KAFFEESIEBE WEGA
FILTROS CAFÉ WEGA

1

2

3

4

Photo	LF Code	Model	Suitable for	Notes	ø edge - height (H)
1	**1160251**	1 CUP - 6 gr	WEGA	---	70 - 20.5
1	**1160052**	1 CUP - 7 gr	WEGA WY27142 / WY27142000	---	70 - 24.5
1	**1160335**	1 CUP - 7 gr	WEGA	---	70 - 24.5
2	**1160252**	2 CUPS - 12 gr	WEGA	---	70 - 21
2	**1160053**	2 CUPS - 14 gr	WEGA W10326 / WY27171	---	70 - 24.5
2	**1160337**	2 CUPS - 14 gr	WEGA	---	70 - 24.5
2	**1160345**	2 CUPS - 18 gr	WEGA WY27190	---	70 - 28
3	**1160339**	BLIND - CIECO	WEGA WY27173	---	70 - 17
1	**1160276**	1 CUP - 7 gr	WEGA WY27144000	CONCEPT52	65 - 25
2	**1160277**	2 CUPS - 14 gr	WEGA WY27175000	CONCEPT52	65 - 27.5
3	**1160278**	BLIND - CIECO	WEGA WY27175001	CONCEPT52	65 - 25
1	**1160050**	1 CUP - 6 gr	WEGA WY27146	CONCEPT56	70 - 19.5
2	**1160529**	2 CUPS - 12 gr	WEGA WY27176	CONCEPT56	70 - 22
4	**1160503**	POD 1 CUP	WEGA	---	70 - 17
4	**1160504**	POD 2 CUPS	WEGA	---	70 - 21.5

FILTRI CAFFE' WEGA "PRECISIONE"
PRECISION COFFEE FILTERS WEGA
PRÄZISIONSSIEBE WEGA
FILTROS CAFÉ DE PRECISIÓN WEGA

1

2

3

4 - ULTRAFINE

Photo	LF Code	Model	Suitable for	Notes	ø edge - height (H)	N° holes
1	**1460100**	1 CUP - 6/8 gr - H24.5	WEGA	---	70 - 24.5	177
1	**1460101**	1 CUP - 7/9 gr - H26.5	WEGA	---	70 - 26.5	253
2	**1460102**	2 CUPS - 12/18 gr - H24.5	WEGA	---	70 - 24.5	641
2	**1460103**	2 CUPS - 14/20 gr - H26.5	WEGA	---	70 - 26.5	641
3	**1460113**	2 CUPS - 12/18 gr - H24	WEGA	---	70 - 24	715
3	**1460114**	2 CUPS - 16/20 gr - H26	WEGA	---	70 - 26	715
3	**1460104**	3 CUPS - 18/22 gr - H28.5	WEGA	---	70 - 28.5	715
1	**1460110**	1 CUP - 6/9 gr - H25	WEGA	CONCEPT52	65 - 25	253
2	**1460111**	2 CUPS - 12/18 gr - H27.5	WEGA	CONCEPT52	65 - 27.5	641
3	**1460112**	3 CUPS - 21 gr - H32	WEGA	CONCEPT52	65 - 32	641
4	**1460400**	2 CUPS - 12/18 gr - H24	WEGA	ULTRAFINE MEMBRANE	70 - 24	565
4	**1460401**	2 CUPS - 14/20 gr - H26	WEGA	ULTRAFINE MEMBRANE	70 - 26	565
4	**1460402**	2 CUPS - 18/22 gr - H28	WEGA	ULTRAFINE MEMBRANE	70 - 28	565

Filtri progettati per ottenere la perfetta estrazione del caffè , acciaio Aisi 316 , certificati alimentare
Filters designed to obtain a perfect coffee brewing, Aisi 316 steel, food safe
Diese Siebe wurden für die perfekte Kaffeeextraktion hergestellt, Stahl Aisi 316, lebensmitteltauglich-zertifiziert
Filtros planeados para obtener la perfecta extracción del café, acero Aisi 316, certificados uso alimentario

FILTRI CAFFE' ZACCONI
COFFEE FILTERS ZACCONI
KAFFEESIEBE ZACCONI
FILTROS CAFÉ ZACCONI

1

2

Photo	LF Code	Model	Suitable for	Notes	ø edge - height (H)
1	**1460010**	1 CUP	ZACCONI 60	---	57 - 15
2	**1460011**	2 CUPS	ZACCONI 60A	---	

Filtri carta a cesto
Basket paper filters
Papierfilter korbförmig
Filtros papel

ATTREZZATURE COMPLETE - SISTEMA PER CAFFÈ PERCOLATO HARIO
COMPLETE EQUIPMENT - SYSTEM FOR POUR-OVER COFFEE HARIO
EINRICHTUNGEN - SYSTEM FÜR KAFFEE-PERKOLATOR HARIO
EQUIPOS COMPLETOS - SISTEMA PARA CAFÉ PERCOLADO HARIO

1 - STANDARD

2 - STANDARD

3 - NO TASTE

4 - NO TASTE

5

6

Photo	LF Code	Notes	Model
1	**1235053**	1-2 CUPS	VCF-01-100W
2	**1235054**	1-4 CUPS	VCF-02-100W
3	**1235091**	1-2 CUPS	VCF-01-100M
4	**1235092**	1-4 CUPS	VCF-02-100M
5	**1235089**	1-2 CUPS	FD-1
5	**1235093**	3-4 CUPS	FD-3
6	**1235102**	1-2 / 1-4	VPS-100W

ATTREZZATURE COMPLETE - FILTRI VARI PER CAFFÈ PERCOLATO
EQUIPMENT, COMPLETE - VARIOUS FILTERS FOR SYSTEM FOR POUR-OVER COFFEE
KOMPLETTE EINRICHTUNGEN - VERSCHIEDENE FILTER FÜR KAFFEE-PERKOLATOR
EQUIPOS COMPLETOS - FILTROS VARIADOS PARA CAFÉ PERCOLADO

1

2

3

4

5

6

Photo	LF Code	Notes	Model
1	**1235110**	INOX / 1-4 CUPS	E&B - HARIO V60 - CHEMEX
2	**1235044**	4-6 CUPS	CHEMEX FS-100
3	**1235099**	1-3 CUPS	CHEMEX FP-2
4	**1235040**	350 FILTERS	AEROPRESS
5	**1235041**	INOX - 150 MICRON	AEROPRESS
5	**1235068**	INOX - 35 MICRON	AEROPRESS
6	**1235067**	200 MICRON	SYPHON
6	**1235066**	35 MICRON	SYPHON

FILTRI AQUA
AQUA FILTERS
FILTER AQUA
FILTROS AQUA

RLA

CA-POST20

FA

CTO-E

LF Code	Model	Filtration degree	Efficiency	Height	external ø (mm)	internal ø (mm)	Compatible container
3160446	RLA	80 MICRON	80%	5" - 127 mm	65	27	3160439-3160441
3160447	RLA	80 MICRON	80%	9"3/4 - 247 mm	65	27	3160440-3160442-3160444
3160448	RLA	80 MICRON	80%	20" - 508 mm	65	27	3160443-3160445
3160455	CA-POST20	20 MICRON	75%	5" - 127 mm	72	27	3160439-3160441
3160456	CA-POST20	20 MICRON	75%	9"3/4 - 247 mm	72	27	3160440-3160442-3160444
3160457	CA-POST20	20 MICRON	75%	20" - 508 mm	72	27	3160443-3160445
3160452	FA	20 MICRON	80%	5" - 127 mm	61	28	3160439-3160441
3160453	FA	20 MICRON	80%	9"3/4 - 247 mm	61	28	3160440-3160442-3160444
3160454	FA	20 MICRON	80%	20" - 508 mm	61	28	3160443-3160445
3160458	CTO-E	10 MICRON	95%	9"3/4 - 247 mm	72	26	3160440-3160442-3160444
3160459	CTO-E	10 MICRON	95%	20" - 508 mm	72	26	3160443-3160445
3160449	FA	5 MICRON	80%	5" - 127 mm	61	28	3160439-3160441
3160450	FA	5 MICRON	80%	9"3/4 - 247 mm	61	28	3160440-3160442-3160444
3160451	FA	5 MICRON	80%	20" - 508 mm	61	28	3160443-3160445

FILTRI AQUA CONTENITORI PER CARTUCCE
AQUA FILTERS CONTAINERS FOR CARTRIDGES
FILTER AQUA BEHÄLTER FÜR PATRONEN
FILTROS AQUA CONTENEDORES PARA CARTUCHOS

LF Code	Model	Dimensions ø x h	Connections	Filtering cartridge height	Compatible filtering cartridges
3160439	FP3/2	122 x 189 mm	1/2"F	5" - 127 mm	3160446-3160455-3160449-3160452
3160441	FP3/2	122 x 189 mm	3/4"F	5" - 127 mm	3160446-3160455-3160449-3160452
3160440	FP3/2	122 x 311 mm	1/2"F	9"3/4 - 247 mm	3160447-3160456-3160458-3160450-3160453
3160442	FP3/2	122 x 311 mm	3/4"F	9"3/4 - 247 mm	3160447-3160456-3160458-3160450-3160453
3160444	FP3/2	122 x 311 mm	1"F	9"3/4 - 247 mm	3160447-3160456-3160458-3160450-3160453
3160443	FP3/2	122 x 571 mm	3/4"F	20" - 508 mm	3160448-3160457-3160459-3160451-3160454
3160445	FP3/2	122 x 571 mm	1"F	20" - 508 mm	3160448-3160457-3160459-3160451-3160454
3160460	FP2 - FP3	---	---	---	---
3160461	FP2 - FP3	---	---	---	---

FILTRI BILT
BILT FILTERS
FILTER BILT
FILTROS BILT

B5

B52/B58

LF Code	Model	Filtration degree	Dimensions	Water temperature	Capacity at 18°Fr	Operating pressure
3010172	B5232	150 µm	ø 150x359 mm	5÷40°C	1500 L	max 8 bar
3010173	B52MX	150 µm	ø 150x359 mm	5÷40°C	3000 L	max 8 bar
3010174	B52	150 µm	ø 150x359 mm	5÷40°C	4200 L	max 8 bar
3010179	B58MX	150 µm	ø 150x439 mm	5÷40°C	5700 L	max 8 bar
3010185	B58	150 µm	ø 150x439 mm	5÷40°C	7000 L	max 8 bar
3010195	B5	---	ø 3/8"M - ø 10 m	---	---	---
3010190	B52/B58	---	---	---	---	---

FILTRI BRITA
BRITA FILTERS
KAFFEESIEBE BRITA
FILTROS BRITA

LF Code	Model	Dimensions	Water temperature	Capacity at 10°KH	Operating pressure	Flow rate
7151296	C 1100	ø 184x554 mm	4÷30°C	11500 L	2÷8.6 bar	120 L/h
3010607	C 500	ø 149x554 mm	4÷30°C	6800 L	2÷8.6 bar	120 L/h
3010606	C 300	ø 124x476 mm	4÷30°C	4000 L	2÷8.6 bar	60 L/h
3010605	C 150	ø 117x421 mm	4÷30°C	2408 L	2÷8.6 bar	60 L/h
3010608	C 50	ø 117x267 mm	4÷30°C	960 L	2÷8.6 bar	60 L/h
3010609	C 25	ø 117x267 mm	4÷30°C	352 L	2÷8.6 bar	30 L/h
3010617	C 500	---	---	---	---	---
3010616	C 300	---	---	---	---	---
3010615	C 150	---	---	---	---	---
3010618	C 50	---	---	---	---	---
3010619	C 25	---	---	---	---	---

FILTRI BRITA
BRITA FILTERS
KAFFEESIEBE BRITA
FILTROS BRITA

LF Code	Model	Dimensions	Water temperature	Capacity at 10°KH	Operating pressure	Flow rate
3010219	1200 STEAM	ø 288x550 mm	4÷30°C	10800 L	2÷6.9 bar	100 L/h
3010218	600 STEAM	ø 235x520 mm	4÷30°C	5830 L	2÷6.9 bar	100 L/h
3010600	1200 CLEAN	ø 255x550 mm	4÷60°C	12000 L	2÷6.0 bar	300 L/h
3010601	1200 CLEAN EXTRA	ø 255x550 mm	4÷60°C	5000 L	2÷6.0 bar	300 L/h
3010604	1200 ST	ø 288x550 mm	4÷30°C	13187 L	2÷6.9 bar	200 L/h
3010603	600 ST	ø 249x520 mm	4÷30°C	7200 L	2÷6.9 bar	100 L/h
3010602	450 ST	ø 249x408 mm	4÷30°C	4217 L	2÷6.9 bar	100 L/h
3010258	1200 STEAM	---	---	---	---	---
3010257	600 STEAM	---	---	---	---	---
3010610	1200 CLEAN	---	---	---	---	---
3010611	1200 CLEAN EXTRA	---	---	---	---	---
3010614	1200 ST	---	---	---	---	---
3010613	600 ST	---	---	---	---	---
3010612	450 ST	---	---	---	---	---

FILTRI BRITA ACCESSORI
BRITA FILTERS ACCESSORIES
FILTER BRITA ZUBEHÖRE
FILTROS BRITA ACCESORIOS

1

2

3

4

5

6

Photo	LF Code	Notes
1	**3010622**	G 3/8" - BYPASS 70%
1	**3010623**	G 3/8" - BYPASS 30%
2	**3600067**	JG8 - BYPASS 30%
2	**7151297**	JG8 - BYPASS 70%
3	**3010070**	FLOWMETER
4	**3010621**	CARBON TEST
5	**3010620**	TOTAL TEST
6	**3600068**	3/4" Fp x 3/8" Fp 1500 mm

FILTRI BWT WATER+MORE
FILTERS BWT WATER+MORE
FILTER BWT WATER+MORE
FILTROS BWT WATER+MORE

LF Code	Description	h (mm) *	Water temperature	Capacity at 10°KH	Operating pressure
7150444	BESTCLEAR 2XL	465	4÷30°C	9000 L	2÷8 bar
3010702	BESTMAX X	270 mm	4÷30°C	720 L	2÷8 bar
3010703	BESTMAX S	350 mm	4÷30°C	1200 L	2÷8 bar
3010704	BESTMAX V	410 mm	4÷30°C	3000 L	2÷8 bar
3010705	BESTMAX M	465 mm	4÷30°C	4560 L	2÷8 bar
3010706	BESTMAX L	490 mm	4÷30°C	6240 L	2÷8 bar
3010707	BESTMAX XL	492 mm	4÷30°C	8160 L	2÷8 bar
7150446	BESTMAX 2XL	574 mm	4÷30°C	8270 L	2÷8 bar
7150445	BESTTASTE X	280 mm	4÷30°C	10000 L	2÷8 bar

* Compreso di testa
* complete with head
* komplett mit Kopf
* Completo con cabeza

FILTRI BWT WATER+MORE ACCESSORI
FILTERS BWT WATER+MORE ACCESSORIES
FILTER BWT WATER+MORE ZUBEHÖRE
FILTROS BWT WATER+MORE ACCESORIOS

1

2

3

Photo	LF Code	Notes
1	**3010700**	3/8"
2	**3010701**	3/8"
3	**3010708**	---

FILTRI EVERPURE
EVERPURE FILTER
KAFFEESIEBE EVERPURE
FILTROS EVERPURE

LF Code	Model	Dimensions	Water temperature	Capacity at 18°Fr	Operating pressure	Flow rate
3010223	ESO6	ø 79x435 mm	2÷38°C	1700 L	0.7÷8.5 bar	1.9 L/min
3010224	ESO7	ø 79x530 mm	2÷38°C	2300 L	0.7÷8.5 bar	1.9 L/min
3600032	AC	ø 79x260 mm	2÷38°C	2800 L	0.7÷8.5 bar	1.9 L/min
3600102	4H	ø 79x375 mm	2÷38°C	5600 L	0.7÷8.5 bar	1.9 L/min
3600034	4DC	ø 79x375 mm	2÷38°C	5677 L	0.7÷8.5 bar	1.9 L/min
3600111	2K PLUS	ø 79x260 mm	2÷38°C	5678 L	0.7÷8.5 bar	1.9 L/min
3600001	4C	ø 79x375 mm	2÷38°C	11300 L	0.7÷8.5 bar	1.9 L/min
3600112	4K PLUS	ø 79x375 mm	2÷38°C	11300 L	0.7÷8.5 bar	1.9 L/min
3600107	4CB5	ø 79x375 mm	2÷38°C	22710 L	0.7÷8.5 bar	6.3 L/min
3600108	4CB5-S	ø 79x375 mm	2÷38°C	22710 L	0.7÷8.5 bar	6.3 L/min
3600106	MC2	ø 79x530 mm	2÷38°C	34000 L	0.7÷8.5 bar	6.3 L/min
3600103	MH2	ø 79x530 mm	2÷38°C	34000 L	0.7÷8.5 bar	6.3 L/min

FILTRI EVERPURE
EVERPURE FILTER
KAFFEESIEBE EVERPURE
FILTROS EVERPURE

LF Code	Model	Filtration degree	Dimensions	Water temperature	Capacity at 10°KH	Operating pressure
3600036	CLARIS S	5 µm	ø 95x282 mm	4÷30°C	1500 L	2÷8 bar
3600037	CLARIS M	5 µm	ø 95x392 mm	4÷30°C	2500 L	2÷8 bar
3600038	CLARIS L	5 µm	ø 136x359 mm	4÷30°C	4600 L	2÷8 bar
3600039	CLARIS xL	5 µm	ø 136x475 mm	4÷30°C	6600 L	2÷8 bar
3600040	ø 3/8" SX	---	---	---	---	---
3600041	ø 3/8" DX	---	---	---	---	---
3394228	---	---	---	---	---	---

FILTRI EVERPURE ACCESSORI
FILTERS EVERPUREE ACCESSORIES
FILTER EVERPURE ZUBEHÖRE
FILTROS EVERPUREE ACCESORIOS

1

2

3

4

5

Photo	LF Code	Notes
1	**3600104**	QL2-HO
2	**3600002**	QL3
3	**3600035**	QL3B
4	**3600044**	ø 3/8"-3/8"
5	**3600043**	ø 3/8"x3/4" - 1500 mm

FILTRI EVERPURE ANTICALCARE
FILTERS EVERPUREE SCALE REMOVER
FILTER EVERPURE ENTKALKER
FILTROS EVERPUREE DESINCRUSTANTE

1

2

3

Photo	LF Code	Model
1	**3092323**	SCALEKLEEN 1 Kg
2	**3092322**	SCALEKLEEN 200 gr
3	**3092321**	SCALEKLEEN 50 gr

FILTRI OMNIPURE
OMNIPURE FILTERS
FILTER OMNIPURE
FILTROS OMNIPURE

LF Code	Model	Filtration degree	Dimensions	Water temperature	Autonomy	Operating pressure	Flow rate
3010064	SCL10	5 µm	ø 3/8"F - 254x51 mm	COLD WATER	4730 L	2÷8.6 bar	1.9 L/min
3010139	SCL10	5 µm	ø 1/4"F - 254x51 mm	COLD WATER	4730 L	2÷8.6 bar	1.9 L/min
3010178	K2505SS180	5 µm	ø 1/4"F - 254x51 mm	2÷38°C	1 YEAR-1 ANNO	2÷8.6 bar	1.9 L/min
3010140	K2505CC	5 µm	ø 1/4"F - 254x51 mm	2÷38°C	1 YEAR-1 ANNO	2÷8.6 bar	1.9 L/min
3010166	K5605SS0	5 µm	ø 1/4"F - 305x63 mm	2÷38°C	1 YEAR-1 ANNO	2÷8.6 bar	1.9 L/min
3010065	K2553BB	5 µm	ø 1/4"F - 254x51 mm	2÷38°C	6 MONTHS-6 MESI	2÷8.6 bar	1.9 L/min
3010165	K5515SSS0	1 µm	ø 1/4"F - 254x63 mm	2÷38°C	4750 L	2÷8.6 bar	1.9 L/min
3010156	K2586LL0	5 µm	ø 1/4"F - 254x51 mm	2÷38°C	4750 L	2÷8.6 bar	1.9 L/min
3010158	K2520PCC	5 µm	ø 3/8"F - 254x51 mm	2÷38°C	5700 L	2÷8.6 bar	1.9 L/min
3010168	Q5320P	1 µm	152x63 mm	2÷38°C	3800 L	2÷8.6 bar	1.9 L/min
3010167	Q5386-1 5700 L	5 µm	152x63 mm	2÷38°C	5700 L	2÷8.6 bar	1.9 L/min
3010169	ø 3/8" NPTF	---	---	---	---	---	---
3010170	ø 1/4"	---	---	---	---	---	---

FILTRI PROFINE THINK WATER
FILTER PROFINE THINK WATER
KAFFEESIEBE PROFINE THINK WATER
FILTROS PROFINE THINK WATER

LF Code	Model	Dimensions	Water temperature	Autonomy	Operating pressure	Flow rate
3600206	PROFINE ARSENIC MEDIUM	ø 87.4x384 mm	4÷38°C	13500 L	0.6÷6 bar	1.0 L/min
3600207	PROFINE ARSENIC LARGE	ø 87.4x529 mm	4÷38°C	20000 L	0.6÷6 bar	1.5 L/min
3600200	PROFINE BLUE SMALL	ø 87.4x269 mm	4÷38°C	10000 L	0.6÷6 bar	3.0 L/min
3600201	PROFINE BLUE MEDIUM	ø 87.4x384 mm	4÷38°C	15500 L	0.6÷6 bar	5.0 L/min
3600202	PROFINE BLUE LARGE	ø 87.4x529 mm	4÷38°C	22000 L	0.6÷6 bar	7.0 L/min
3600208	PROFINE OCRA MEDIUM	ø 87.4x384 mm	4÷38°C	525 L	0.6÷6 bar	1.5 L/min
3600209	PROFINE OCRA LARGE	ø 87.4x529 mm	4÷38°C	750 L	0.6÷6 bar	2.0 L/min
3600203	PROFINE SILVER SMALL	ø 87.4x269 mm	4÷38°C	10000 L	0.6÷6 bar	3.0 L/min
3600204	PROFINE SILVER MEDIUM	ø 87.4x384 mm	4÷38°C	15500 L	0.6÷6 bar	5.0 L/min
3600205	PROFINE SILVER LARGE	ø 87.4x529 mm	4÷38°C	22000 L	0.6÷6 bar	7.0 L/min
3600211	SINGLE-SIDED - MONO-LATO	---	---	---	---	---
3600210	SERIELLY - IN SERIE	---	---	---	---	---
3600212	MEDIUM	---	---	---	---	---
3600213	LARGE	---	---	---	---	---

FILTRI REFINER
REFINER FILTERS
KAFFEESIEBE REFINER
FILTROS REFINER

LF Code	Model	Dimensions	Water temperature	Autonomy	Operating pressure	Flow rate
3600052	350	ø 79x375 mm	2÷40°C	7500 L	max 10 bar	400 L/h
3600053	500	ø 79x520 mm	2÷40°C	12000 L	max 10 bar	550 L/h
3600049	ABS	---	---	---	---	---

GOMMINI PROTEZIONE
PROTECTIVE RUBBERPIECES
SCHUTZGUMMI
GOMAS PROTECCIÓN

1

2

3

4

5

Photo	LF Code	For pipe ø (mm)	Suitable for
1	**1186398**	8	ALL BRANDS - TUTTE LE MARCHE
1	**5030025**	10	ALL BRANDS - TUTTE LE MARCHE
2	**1187501**	8	ALL BRANDS - TUTTE LE MARCHE
2	**1186924**	10	ALL BRANDS - TUTTE LE MARCHE
3	**1186180**	10	ALL BRANDS - TUTTE LE MARCHE
4	**1549009**	8	ASTORIA/CMA - MCE - WEGA
5	**1549011**	10	CASADIO - CIMBALI - FAEMA

GOMMINI PROTEZIONE
PROTECTIVE RUBBERPIECES
SCHUTZGUMMI
GOMAS PROTECCIÓN

1

2

3

4

5

6

Photo	LF Code	For pipe ø (mm)	Suitable for
1	**1186339**	8	ALL BRANDS - TUTTE LE MARCHE
2	**1186080**	10	ALL BRANDS - TUTTE LE MARCHE
3	**1549020**	10	GAGGIA
4	**1187001**	10	SPAZIALE
5	**1449172**	8	ASTORIA/CMA - ELEKTRA - MARZOCCO - WEGA
6	**1649002**	8	CARIMALI

GOMMINI PROTEZIONE
PROTECTIVE RUBBERPIECES
SCHUTZGUMMI
GOMAS PROTECCIÓN

1

2

3

Photo	LF Code	For pipe ø (mm)	Suitable for
1	**1549032**	---	DELONGHI
2	**5500789**	---	SAECO
3	**1189002**	---	GAGGIA - SAECO

GRUPPI CAFFE' E RICAMBI ASTORIA/CMA
COFFEE GROUPS AND SPARE PARTS ASTORIA/CMA
KAFFEEGRUPPEN UND ERSATZTEILE ASTORIA/CMA
GRUPOS CAFÉ Y REPUESTOS ASTORIA/CMA

1

2

3

4

Photo	LF Code	Suitable for	For machine model
1	**1192209**	ASTORIA/CMA 56082101	ADRIA - ARGENTA - BRAVA - DENISE - DORA - LISA - PRATIC
2	**1192208**	ASTORIA/CMA 56082100	CK - CKE - CKX - CKXE - PRATICNEW
3	**1192206**	ASTORIA/CMA 56082107	DIVINA - PERLA 4D
4	**1192204**	ASTORIA/CMA 56082103	BRAVA - GLORIA

GRUPPI CAFFE' E RICAMBI ASTORIA/CMA
COFFEE GROUPS AND SPARE PARTS ASTORIA/CMA
KAFFEEGRUPPEN UND ERSATZTEILE ASTORIA/CMA
GRUPOS CAFÉ Y REPUESTOS ASTORIA/CMA

1

2

3

4

5

6

Photo	LF Code	Suitable for	For machine model
1	**1027003**	ASTORIA/CMA 25739502	BRAVA - CALYPSO - DIVINA - GLORIA - GLORIA R12 - PERLA 4D
2	**5500730**	ASTORIA/CMA 56352	RAPALLO AL
3	**1192200**	ASTORIA/CMA 15026001	RAPALLO AL
4	**1192202**	ASTORIA/CMA 56351	RAPALLO AL
5	**1192203**	ASTORIA/CMA 56354001	RAPALLO AL
6	**1450551**	ASTORIA/CMA 52000168	ARGENTA - BRAVA - CALYPSO - CK - CKE - CKX - CKXE - DENIS

GRUPPI CAFFE' E RICAMBI BEZZERA
COFFEE GROUPS AND SPARE PARTS BEZZERA
KAFFEEGRUPPEN UND ERSATZTEILE BEZZERA
GRUPOS CAFÉ Y REPUESTOS BEZZERA

1

2

3

4

5

6

Photo	LF Code	Suitable for	For machine model
1	**1186313**	BEZZERA 7479969	GALATEA - GALATEA DOMUS - GIULIA - UNICA
2	**1186592**	BEZZERA 7479942	GALATEA - GALATEA DOMUS - GIULIA - UNICA
3	**1349536**	BEZZERA 7479945	GALATEA - GALATEA DOMUS - GIULIA - UNICA
4	**1523451**	BEZZERA 7479937	GALATEA - GALATEA DOMUS - GIULIA - UNICA
5	**1523452**	BEZZERA 7479946	GALATEA - GALATEA DOMUS - GIULIA - UNICA
6	**1523453**	BEZZERA 7479943	GALATEA - GALATEA DOMUS - GIULIA - UNICA

GRUPPI CAFFE' E RICAMBI BEZZERA
COFFEE GROUPS AND SPARE PARTS BEZZERA
KAFFEEGRUPPEN UND ERSATZTEILE BEZZERA
GRUPOS CAFÉ Y REPUESTOS BEZZERA

1

2

3

4

5

6

Photo	LF Code	Suitable for	For machine model
1	**1027002**	BEZZERA 7479957	GALATEA - GALATEA DOMUS - GIULIA - UNICA
2	**1027016**	BEZZERA 7479956	GALATEA - GALATEA DOMUS - GIULIA - UNICA
3	**1349022**	BEZZERA 7479967	GALATEA - GALATEA DOMUS - GIULIA - UNICA
4	**1349537**	BEZZERA 7479961	GALATEA DOMUS - GIULIA - UNICA
5	**1439533**	BEZZERA 7479971	GALATEA - GALATEA DOMUS - GIULIA - UNICA
6	**1225002**	BEZZERA 7479948	GALATEA - GALATEA DOMUS - GIULIA - UNICA

GRUPPI CAFFE' E RICAMBI BFC
COFFEE GROUPS AND SPARE PARTS BFC
KAFFEEGRUPPEN UND ERSATZTEILE BFC
GRUPOS CAFÉ Y REPUESTOS BFC

1

2

3

4

5

Photo	LF Code	Suitable for	For machine model
1	**1192178**	BFC	CLASSICA LEVA
2	**1225053**	BFC	CLASSICA LEVA
3	**1192176**	BFC	CLASSICA LEVA
4	**1192177**	BFC	CLASSICA LEVA
5	**1192179**	BFC	CLASSICA LEVA

GRUPPI CAFFE' E RICAMBI BFC
COFFEE GROUPS AND SPARE PARTS BFC
KAFFEEGRUPPEN UND ERSATZTEILE BFC
GRUPOS CAFÉ Y REPUESTOS BFC

1

2

3

Photo	LF Code	Suitable for	For machine model
1	**1186313**	BFC	CLASSICA - DELUX - GALILEO - LA VITTORIA - LIRA
2	**1523451**	BFC 0530001	CLASSICA - DELUX - GALILEO - LA VITTORIA - LIRA
3	**1523452**	BFC 0530020	CLASSICA - DELUX - GALILEO - LA VITTORIA - LIRA

GRUPPI CAFFE' E RICAMBI BFC
COFFEE GROUPS AND SPARE PARTS BFC
KAFFEEGRUPPEN UND ERSATZTEILE BFC
GRUPOS CAFÉ Y REPUESTOS BFC

1

2

3

4

5

Photo	LF Code	Suitable for	For machine model
1	**5500730**	BFC	CLASSICA LEVA
2	**1192185**	BFC	CLASSICA LEVA
3	**1192167**	BFC	CLASSICA LEVA
4	**1192168**	BFC	CLASSICA LEVA
5	**1192184**	BFC	CLASSICA LEVA

GRUPPI CAFFE' E RICAMBI BFC
COFFEE GROUPS AND SPARE PARTS BFC
KAFFEEGRUPPEN UND ERSATZTEILE BFC
GRUPOS CAFÉ Y REPUESTOS BFC

1

2

3

4

5

6

Photo	LF Code	Suitable for	For machine model
1	**1027002**	BFC 0530040	CLASSICA - DELUX - GALILEO - LA VITTORIA - LIRA
2	**1027016**	BFC 0520030	CLASSICA - DELUX - GALILEO - IMOLA - JUNIOR - LA VITTORIA
3	**1349022**	BFC 0530090	CLASSICA - DELUX - GALILEO - LA VITTORIA - LIRA
4	**1439011**	BFC	CLASSICA - DELUX - GALILEO - LA VITTORIA - LIRA
5	**1439006**	BFC 0530060	CLASSICA - DELUX - GALILEO - LA VITTORIA - LIRA
6	**1349536**	BFC 0530047	CLASSICA - DELUX - GALILEO - LA VITTORIA - LIRA

GRUPPI CAFFE' E RICAMBI BIALETTI
COFFEE GROUPS AND SPARE PARTS BIALETTI
KAFFEEGRUPPEN UND ZUBEHÖR BIALETTI
GRUPOS CAFÉ Y REPUESTOS BIALETTI

1

2

3

Photo	LF Code	Suitable for	For machine model
1	**1192222**	BIALETTI 912430200	MOKISSIMA CF43
2	**1192223**	BIALETTI 912370180	TAZZISSIMA CF37
3	**1192224**	BIALETTI 912430210	MOKISSIMA CF43

GRUPPI CAFFE' E RICAMBI BIANCHI
COFFEE GROUPS AND SPARE PARTS BIANCHI
KAFFEEGRUPPEN UND ERSATZTEILE BIANCHI
GRUPOS CAFÉ Y REPUESTOS BIANCHI

1

Photo	LF Code	Suitable for	For machine model
1	**1349007**	BIANCHI 04063116	LUCIA - SARA - SOFIA

GRUPPI CAFFE' E RICAMBI BRASILIA
COFFEE GROUPS AND SPARE PARTS BRASILIA
KAFFEEGRUPPEN UND ERSATZTEILE BRASILIA
GRUPOS CAFÉ Y REPUESTOS BRASILIA

1

2

3

4

5

6

Photo	LF Code	Suitable for	For machine model
1	**1192200**	BRASILIA 04055.0.34.04	DECURTIS LEVA - PORTOFINO LEVA
2	**1186592**	BRASILIA 13657.0.00.04	DECURTIS - GRADISCA - MINICLASSIC
3	**1449349**	BRASILIA 00180.0.00.04	CENTURY - CENTURY AMERICA - CLASSICA - FIRENZE - FIRENZE
4	**1523053**	BRASILIA 09453.4.00.09	DECURTIS - GRADISCA - MINICLASSIC
5	**1523452**	BRASILIA 09452.4.00.09	DECURTIS - GRADISCA - MINICLASSIC
6	**1523453**	BRASILIA 09451.4.00.09	DECURTIS - GRADISCA - MINICLASSIC

GRUPPI CAFFE' E RICAMBI BRASILIA
COFFEE GROUPS AND SPARE PARTS BRASILIA
KAFFEEGRUPPEN UND ERSATZTEILE BRASILIA
GRUPOS CAFÉ Y REPUESTOS BRASILIA

1

2

3

4

5

Photo	LF Code	Suitable for	For machine model
1	**1349022**	BRASILIA 13652.0.10.04	DECURTIS - GRADISCA - MINICLASSIC
2	**1439533**	BRASILIA 13653.0.10.04	DECURTIS - GRADISCA - MINICLASSIC
3	**1027016**	BRASILIA 12790.0.10.04	CENTURY RESTYLING - CLASSICA - DECURTIS - EXCELSIOR
4	**1192202**	BRASILIA 04054.0.10.04	DECURTIS LEVA - PORTOFINO LEVA
5	**1225002**	BRASILIA 13654.0.10.04	DECURTIS - GRADISCA - MINICLASSIC

GRUPPI CAFFE' E RICAMBI BRASILIA
COFFEE GROUPS AND SPARE PARTS BRASILIA
KAFFEEGRUPPEN UND ERSATZTEILE BRASILIA
GRUPOS CAFÉ Y REPUESTOS BRASILIA

1

2

3

4

5

6

Photo	LF Code	Suitable for	For machine model
1	**1027018**	BRASILIA 05597.0.10.04	CENTURY - CLASSICA - FIRENZE - GRADISCA - 100 - 105 - 205
2	**1027002**	BRASILIA 14870.0.10.04	DECURTIS - GRADISCA - MINICLASSIC
3	**1349007**	BRASILIA 12860.4.10.09	EXCELSIOR - PORTOFINO MAXI - PORTOFINO RESTYLING
4	**1349537**	BRASILIA 14871.0.10.04	DECURTIS - GRADISCA - MINICLASSIC
5	**1439011**	BRASILIA 12793.0.10.04	EXCELSIOR - PORTOFINO MAXI - PORTOFINO RESTYLING
6	**1191022**	BRASILIA 13656.0.10.04	DECURTIS - GRADISCA - MINICLASSIC

GRUPPI CAFFE' E RICAMBI CIMBALI
COFFEE GROUPS AND SPARE PARTS CIMBALI
KAFFEEGRUPPEN UND ERSATZTEILE CIMBALI
GRUPOS CAFÉ Y REPUESTOS CIMBALI

1

Photo	LF Code	Suitable for	For machine model
1	**1186280**	CIMBALI 460-502-000	M15 - M25

GRUPPI CAFFE' E RICAMBI DELONGHI
COFFEE GROUPS AND SPARE PARTS DELONGHI
KAFFEEGRUPPEN UND ERSATZTEILE DELONGHI
GRUPOS CAFÉ Y REPUESTOS DELONGHI

1

2

3

4

5

6

Photo	LF Code	Suitable for	For machine model
1	**1192165**	DELONGHI 5332213000	ESAM5400 - ESAM5400EX
2	**1192164**	DELONGHI 5332139600	ECAM23.210.W - ECAM26.455.C - ESAM5400 - ESAM5400EX
3	**1192162**	DELONGHI 5332139500	ECAM23.210.W - ECAM26.455.C - ESAM5400 - ESAM5400EX
4	**D192003**	DELONGHI ES0084378	PIXIE
5	**5054445**	DELONGHI 7332166600	EAM2000 - EAM4000 - ECA13200 - ESAM2600 - ESAM3500 - ESAM4200
6	**1192217**	DELONGHI 5313216331	ETAM29.660.S - ECAM350.15.B - ECAM44.664.B - ECAM650.55.MS

GRUPPI CAFFE' E RICAMBI DELONGHI
COFFEE GROUPS AND SPARE PARTS DELONGHI
KAFFEEGRUPPEN UND ERSATZTEILE DELONGHI
GRUPOS CAFÉ Y REPUESTOS DELONGHI

1 2 3 4 5 6

Photo	LF Code	Suitable for	For machine model
1	**5081885**	DELONGHI ES0072437	PIXIE
2	**5076358**	DELONGHI 5332139800	EABI66.00 - EAM3200.S - EAM4300 - ECA14300 - ESAM2000 - ESAM4300
3	**5067824**	DELONGHI 7313214521	ECAM21.210.B - ECAM23.210.B - ECAM26.455.B - ECAM44.660.B
4	**D225003**	DELONGHI 5313213391	ECAM26.455.B - ECAM350.15.B - ECAM350.55.B - ECAM44.660.B
5	**1192225**	DELONGHI 5313213371	ETAM29.660.S - ECAM350.15.B - ECAM44.664.B - ECAM650.55.MS
6	**1192226**	DELONGHI 5313213431	ETAM29.660.S - ECAM350.15.B - ECAM44.664.B - ECAM650.55.MS

GRUPPI CAFFE' E RICAMBI DELONGHI
COFFEE GROUPS AND SPARE PARTS DELONGHI
KAFFEEGRUPPEN UND ERSATZTEILE DELONGHI
GRUPOS CAFÉ Y REPUESTOS DELONGHI

1 2 3 4

Photo	LF Code	Suitable for	For machine model
1	**5064401**	DELON GHI 7313244461	ECAM21.117.B - ECAM23.120.B - ECAM23.210.B - ECAM25.452.S
2	**5062941**	DELONGHI 7313215501	ESAM6700 EX:1
3	**5057795**	DELONGHI 7313217611	ESAM5400 EX:1 - ESAM5450 EX:1
4	**1192227**	DELONGHI 7313244171	ETAM29.660.S - ETAM29.510.B - ETAM29.620.SB - ETAM36.364.M

GRUPPI CAFFE' E RICAMBI DELONGHI
COFFEE GROUPS AND SPARE PARTS DELONGHI
KAFFEEGRUPPEN UND ERSATZTEILE DELONGHI
GRUPOS CAFÉ Y REPUESTOS DELONGHI

1 2 3 4 5

Photo	LF Code	Suitable for	For machine model
1	**5078956**	DELONGHI ES0086183	CITIZ
2	**D192001**	DELONGHI 5513228031	LATTISSIMA PLUS
3	**1192161**	DELONGHI 7332183900	ESAM5400
4	**1192163**	DELONGHI 7313232331	ECAM23.210.W - ECAM26.455.C
5	**5077791**	DELONGHI 5513227911	ESAM2600 - ESAM3000 - ESAM4000 - ESAM5400 - ESAM6700

GRUPPI CAFFE' E RICAMBI DIDIESSE
COFFEE GROUPS AND SPARE PARTS DIDIESSE
KAFFEEGRUPPEN UND ERSATZTEILE DIDIESSE
GRUPOS CAFÉ Y REPUESTOS DIDIESSE

1

2

3

4

5

6

Photo	LF Code	Suitable for	For machine model
1	**1192192**	DIDIESSE FR014	FROG
2	**1192193**	DIDIESSE FR015	FROG
3	**1192196**	DIDIESSE FR016	FROG
4	**1192194**	DIDIESSE FR107	FROG
5	**1192195**	DIDIESSE FR005	FROG
6	**1190008**	DIDIESSE FR032	FROG

GRUPPI CAFFE' E RICAMBI ECM
COFFEE GROUPS AND SPARE PARTS ECM
KAFFEEGRUPPEN UND ERSATZTEILE ECM
GRUPOS CAFÉ Y REPUESTOS ECM

1

2

3

4

Photo	LF Code	Suitable for	For machine model
1	**1192188**	ECM R000002143	GIOTTO - VENEZIANO
2	**1349536**	ECM R000002148	GIOTTO - VENEZIANO
3	**1523053**	ECM C219900424	GIOTTO
4	**1523453**	ECM C219900430	GIOTTO - VENEZIANO

GRUPPI CAFFE' E RICAMBI ECM
COFFEE GROUPS AND SPARE PARTS ECM
KAFFEEGRUPPEN UND ERSATZTEILE ECM
GRUPOS CAFÉ Y REPUESTOS ECM

1

2

3

4

5

6

Photo	LF Code	Suitable for	For machine model
1	**1192181**	ECM C229901165	GIOTTO - VENEZIANO
2	**1027116**	ECM C229901133	GIOTTO - LAURA - MICHELANGELO - VENEZIANO
3	**1349022**	ECM R000002142	GIOTTO - VENEZIANO
4	**1349537**	ECM R000002149	GIOTTO - VENEZIANO
5	**1192189**	ECM R000002145	GIOTTO - VENEZIANO
6	**1225002**	ECM R000002146	GIOTTO - VENEZIANO

GRUPPI CAFFE' E RICAMBI ECM MANUFACTURE
COFFEE GROUPS AND SPARE PARTS ECM MANUFACTURE
KAFFEEGRUPPEN UND ERSATZTEILE ECM MANUFACTURE
GRUPOS CAFÉ Y REPUESTOS ECM MANUFACTURE

1

2

3

4

5

6

Photo	LF Code	Suitable for	For machine model
1	**1192188**	ECM MANUFACTURE R000002143	CLASSIKA II - MECHANIKA - TECHNIKA III
2	**1186592**	ECM MANUFACTURE B7479942	CLASSIKA II - MECHANIKA - TECHNIKA III
3	**1349536**	ECM MANUFACTURE R000002148	CLASSIKA II - MECHANIKA - TECHNIKA III
4	**1523452**	ECM MANUFACTURE C219903081	CLASSIKA II - MECHANIKA - TECHNIKA III
5	**1523053**	ECM MANUFACTURE C219900424	CLASSIKA II - MECHANIKA - TECHNIKA III
6	**1523453**	ECM MANUFACTURE C219900430	CLASSIKA II - MECHANIKA - TECHNIKA III

GRUPPI CAFFE' E RICAMBI ECM MANUFACTURE
COFFEE GROUPS AND SPARE PARTS ECM MANUFACTURE
KAFFEEGRUPPEN UND ERSATZTEILE ECM MANUFACTURE
GRUPOS CAFÉ Y REPUESTOS ECM MANUFACTURE

1

2

3

4

5

6

Photo	LF Code	Suitable for	For machine model
1	**1192181**	ECM MANUFACTURE C229901165	CLASSIKA II - MECHANIKA - TECHNIKA III
2	**1027116**	ECM MANUFACTURE C229901133	CLASSIKA II - MECHANIKA - TECHNIKA III
3	**1349022**	ECM MANUFACTURE R000002142	CLASSIKA II - MECHANIKA - TECHNIKA III
4	**1349537**	ECM MANUFACTURE R000002149	CLASSIKA II - MECHANIKA - TECHNIKA III
5	**1192189**	ECM MANUFACTURE R000002145	CLASSIKA II - MECHANIKA - TECHNIKA III
6	**1225002**	ECM MANUFACTURE R000002146	CLASSIKA II - MECHANIKA - TECHNIKA III

GRUPPI CAFFE' E RICAMBI ELEKTRA
COFFEE GROUPS AND SPARE PARTS ELEKTRA
KAFFEEGRUPPEN UND ERSATZTEILE ELEKTRA
GRUPOS CAFÉ Y REPUESTOS ELEKTRA

1

2

3

Photo	LF Code	Suitable for	For machine model
1	**1192020**	ELEKTRA 00960039	CLASSIC BARLUME - SIXTIES
2	**1500201**	ELEKTRA 01335014	BELLE EPOQUE - CLASSIC BARLUME - KAPPA - MODERN - SIXTIES
3	**1160020**	ELEKTRA 00110014	BELLE EPOQUE - CLASSIC BARLUME - KAPPA - MODERN - SIXTIES

GRUPPI CAFFE' E RICAMBI EXPOBAR
COFFEE GROUPS AND SPARE PARTS EXPOBAR
KAFFEEGRUPPEN UND ERSATZTEILE EXPOBAR
GRUPOS CAFÉ Y REPUESTOS EXPOBAR

1 2 3 4 5 6

Photo	LF Code	Suitable for	For machine model
1	**1324054**	EXPOBAR 30200026	DIAMANT - ELEN - G10 - MARKUS - MARKUS SILVER - MEGACREM
2	**1450002**	EXPOBAR 30000043	ELEN - G10 - MARKUS - MARKUS SILVER - MEGACREM - MONROC
3	**1450001**	EXPOBAR 30000040	ELEN - G10 - MARKUS - MARKUS SILVER - MEGACREM - MONROC
4	**1523453**	EXPOBAR CTAV1-05	EB61 - OFFICE
5	**1523053**	EXPOBAR CTAV1-24	EB61 - OFFICE
6	**5061460**	EXPOBAR CTAV1-09	EB61 - OFFICE

GRUPPI CAFFE' E RICAMBI FAEMA
COFFEE GROUPS AND SPARE PARTS FAEMA
KAFFEEGRUPPEN UND ERSATZTEILE FAEMA
GRUPOS CAFÉ Y REPUESTOS FAEMA

1 2 3 4 5 6

Photo	LF Code	Suitable for	For machine model
1	**1523451**	FAEMA 2161136649	E61
2	**1523511**	FAEMA	E61
3	**1523008**	FAEMA 903835000	E61
4	**1523501**	FAEMA 2161136648	E61
5	**1523500**	FAEMA 903828000	E61 - E61LEGEND
6	**1523518**	FAEMA 3161116451	COMPACT - DUEA - EXPRESS - E64 - E66 - P4 - P6

GRUPPI CAFFE' E RICAMBI FAEMA
COFFEE GROUPS AND SPARE PARTS FAEMA
KAFFEEGRUPPEN UND ERSATZTEILE FAEMA
GRUPOS CAFÉ Y REPUESTOS FAEMA

1 2 3 4 5 6

Photo	LF Code	Suitable for	For machine model
1	**1186431**	FAEMA	E64 - E66 - P4 - P6
2	**1186313**	FAEMA 4151135904	E61 - E61LEGEND
3	**1186309**	FAEMA	E61 - E61LEGEND
4	**1186447**	FAEMA	E64 - E66 - P4 - P6
5	**1523516**	FAEMA 4161116449	COMPACT - DUEA - EXPRESS - E64 - E66 - P4 - P6
6	**1390501**	FAEMA 4151135920	E61 - E61LEGEND

GRUPPI CAFFE' E RICAMBI FAEMA
COFFEE GROUPS AND SPARE PARTS FAEMA
KAFFEEGRUPPEN UND ERSATZTEILE FAEMA
GRUPOS CAFÉ Y REPUESTOS FAEMA

1

2

3

4

Photo	LF Code	Suitable for	For machine model
1	**1160515**	FAEMA 4151135895	E61 - E61JUBILE
2	**1186432**	FAEMA	E64 - E66 - P4 - P6
3	**1186433**	FAEMA	E64 - E66 - P4 - P6
4	**1250426**	FAEMA 416116466	COMPACT - DUEA - EXPRESS

GRUPPI CAFFE' E RICAMBI FAEMA
COFFEE GROUPS AND SPARE PARTS FAEMA
KAFFEEGRUPPEN UND ERSATZTEILE FAEMA
GRUPOS CAFÉ Y REPUESTOS FAEMA

1

2

3

4

5

6

Photo	LF Code	Suitable for	For machine model
1	**1027002**	FAEMA 4822135919	E61 - E61LEGEND
2	**1027016**	FAEMA	E61
3	**1027116**	FAEMA 4822135900	E61 - E61JUBILE
4	**1349506**	FAEMA 4152135911	E61 - E61LEGEND
5	**1439011**	FAEMA 903014007	E61 - E61JUBILE
6	**1439006**	FAEMA 4152135921	E61 - E61LEGEND

GRUPPI CAFFE' E RICAMBI FAEMA
COFFEE GROUPS AND SPARE PARTS FAEMA
KAFFEEGRUPPEN UND ERSATZTEILE FAEMA
GRUPOS CAFÉ Y REPUESTOS FAEMA

1

2

3

4

Photo	LF Code	Suitable for	For machine model
1	**1439533**	FAEMA 4152135906	E61 - E61LEGEND
2	**1225000**	FAEMA 2819136651	E61 - E61LEGEND
3	**1225014**	FAEMA 4831135866	E61 - E61LEGEND
4	**1527502**	FAEMA 4831116467	COMPACT - DUEA - EXPRESS - NOSTOP

GRUPPI CAFFE' E RICAMBI FIAMMA RST
COFFEE GROUPS AND SPARE PARTS FIAMMA RST
KAFFEEGRUPPEN UND ERSATZTEILE FIAMMA RST
GRUPOS CAFÉ Y REPUESTOS FIAMMA RST

1

2

3

4

Photo	LF Code	Suitable for	For machine model
1	**1027018**	FIAMMA 5.0.025.0007	PRESTIGE
2	**1027116**	FIAMMA 5.0.025.0025	PRESTIGE
3	**1192186**	FIAMMA 7.0.025.0725	PRESTIGE
4	**1449349**	FIAMMA 4.0.000.0198	ATLANTIC - MARINA

GRUPPI CAFFE' E RICAMBI FIORENZATO CS
COFFEE GROUPS AND SPARE PARTS FIORENZATO CS
KAFFEEGRUPPEN UND ERSATZTEILE FIORENZATO CS
GRUPOS CAFÉ Y REPUESTOS FIORENZATO CS

1

2

3

4

Photo	LF Code	Suitable for	For machine model
1	**1186313**	FIORENZATO A2200191	BRICOLETTA - COLOMBINA - DUCALE - LIDO - VOLANTE
2	**1523451**	FIORENZATO A2200178	BRICOLETTA - COLOMBINA - DUCALE - LIDO - VOLANTE
3	**1523452**	FIORENZATO A2200180	BRICOLETTA - COLOMBINA - DUCALE - LIDO - VOLANTE
4	**1523453**	FIORENZATO A2200208	BRICOLETTA - COLOMBINA - DUCALE - LIDO - VOLANTE

GRUPPI CAFFE' E RICAMBI FIORENZATO CS
COFFEE GROUPS AND SPARE PARTS FIORENZATO CS
KAFFEEGRUPPEN UND ERSATZTEILE FIORENZATO CS
GRUPOS CAFÉ Y REPUESTOS FIORENZATO CS

1

2

3

4

Photo	LF Code	Suitable for	For machine model
1	**1191022**	FIORENZATO	BRICOLETTA - COLOMBINA - DUCALE - LIDO - VOLANTE
2	**1439533**	FIORENZATO	BRICOLETTA - COLOMBINA - DUCALE - LIDO - VOLANTE
3	**1349007**	FIORENZATO A2200010	BRICOLETTA - DUCALE - FENICE - LIDO
4	**1225002**	FIORENZATO	BRICOLETTA - COLOMBINA - DUCALE - LIDO - VOLANTE

GRUPPI CAFFE' E RICAMBI FIORENZATO CS
COFFEE GROUPS AND SPARE PARTS FIORENZATO CS
KAFFEEGRUPPEN UND ERSATZTEILE FIORENZATO CS
GRUPOS CAFÉ Y REPUESTOS FIORENZATO CS

1

2

3

4

5

6

Photo	LF Code	Suitable for	For machine model
1	**1192001**	FIORENZATO A2200034	BRICOLETTA - COLOMBINA - DUCALE - LIDO - VOLANTE
2	**1192006**	FIORENZATO A2200035	BRICOLETTA - DUCALE - FENICE - LIDO
3	**1027002**	FIORENZATO	BRICOLETTA - COLOMBINA - DUCALE - LIDO - VOLANTE
4	**1027016**	FIORENZATO	BRICOLETTA - COLOMBINA - DUCALE - LIDO - VOLANTE
5	**1349022**	FIORENZATO	BRICOLETTA - COLOMBINA - DUCALE - LIDO - VOLANTE
6	**1439011**	FIORENZATO	BRICOLETTA - DUCALE - FENICE - LIDO

GRUPPI CAFFE' E RICAMBI FRACINO
COFFEE GROUPS AND SPARE PARTS FRACINO
KAFFEEGRUPPEN UND ERSATZTEILE FRACINO
GRUPOS CAFÉ Y REPUESTOS FRACINO

1

Photo	LF Code	Suitable for	For machine model
1	**1192187**	FRACINO FC97B	BAMBINO - CHERUB - CONTEMPO - HEAVENLY

GRUPPI CAFFE' E RICAMBI FUTURA
COFFEE GROUPS AND SPARE PARTS FUTURA
KAFFEEGRUPPEN UND ERSATZTEILE FUTURA
GRUPOS CAFÉ Y REPUESTOS FUTURA

1

Photo	LF Code	Suitable for	For machine model
1	**1027016**	FUTURA 200132	F100

GRUPPI CAFFE' E RICAMBI FUTURMAT
COFFEE GROUPS AND SPARE PARTS FUTURMAT
KAFFEEGRUPPEN UND ERSATZTEILE FUTURMAT
GRUPOS CAFÉ Y REPUESTOS FUTURMAT

1

2

3

4

Photo	LF Code	Suitable for	For machine model
1	**1160515**	FUTURMAT 02446300	ARIETE - CUSTOM - E61
2	**1192190**	FUTURMAT 02023000	ARIETE - CUSTOM - E61
3	**1523008**	FUTURMAT 02022903	ARIETE - CUSTOM - E61
4	**1523501**	FUTURMAT 02022804	ARIETE - CUSTOM - E61

GRUPPI CAFFE' E RICAMBI FUTURMAT
COFFEE GROUPS AND SPARE PARTS FUTURMAT
KAFFEEGRUPPEN UND ERSATZTEILE FUTURMAT
GRUPOS CAFÉ Y REPUESTOS FUTURMAT

1

2

3

4

5

6

Photo	LF Code	Suitable for	For machine model
1	**1201572**	FUTURMAT 07716806	F3 - RIMINI
2	**1349404**	FUTURMAT 07976004	RIMINI
3	**1349405**	FUTURMAT 07975910	F3
4	**1390501**	FUTURMAT 02121101	ARIETE - CUSTOM - E61
5	**1186313**	FUTURMAT 01860402	ARIETE - CUSTOM - E61
6	**1186309**	FUTURMAT 02021608	ARIETE - CUSTOM - E61

GRUPPI CAFFE' E RICAMBI FUTURMAT
COFFEE GROUPS AND SPARE PARTS FUTURMAT
KAFFEEGRUPPEN UND ERSATZTEILE FUTURMAT
GRUPOS CAFÉ Y REPUESTOS FUTURMAT

1

2

3

4

5

Photo	LF Code	Suitable for	For machine model
1	**1027002**	FUTURMAT 02010809	ARIETE - CUSTOM
2	**1027016**	FUTURMAT 02102300	ARIETE - CUSTOM
3	**1349506**	FUTURMAT 02026300	ARIETE - CUSTOM
4	**1439006**	FUTURMAT 02121002	ARIETE - CUSTOM
5	**1439533**	FUTURMAT 01878909	ARIETE - CUSTOM

GRUPPI CAFFE' E RICAMBI GAGGIA
COFFEE GROUPS AND SPARE PARTS GAGGIA
KAFFEEGRUPPEN UND ERSATZTEILE GAGGIA
GRUPOS CAFÉ Y REPUESTOS GAGGIA

1

2

3

4

5

Photo	LF Code	Suitable for	For machine model
1	**5029493**	GAGGIA S371133	G105 - G106
2	**1321002**	GAGGIA S314044	G105 - G106
3	**1528024**	GAGGIA S313002	G105 - G106
4	**1192015**	GAGGIA S3140453	G105 - G106
5	**5501139**	GAGGIA S371132	G105 - G106

GRUPPI CAFFE' E RICAMBI GAGGIA
COFFEE GROUPS AND SPARE PARTS GAGGIA
KAFFEEGRUPPEN UND ERSATZTEILE GAGGIA
GRUPOS CAFÉ Y REPUESTOS GAGGIA

1

2

3

4

Photo	LF Code	Suitable for	For machine model
1	**1090039**	GAGGIA 11012564	ACCADEMIA - BRERA - NAVIGLIO - PLATINUM VOGUE - UNICA
2	**5052124**	GAGGIA B0171	BABY - BABY 89 - CLASSIC - NEW BABY - NEW BABY 06 - PAROS - TEBE
3	**5032977**	GAGGIA S3954004	G105 - G106
4	**5501148**	GAGGIA S312382	G105 - G106

GRUPPI CAFFE' E RICAMBI GAGGIA
COFFEE GROUPS AND SPARE PARTS GAGGIA
KAFFEEGRUPPEN UND ERSATZTEILE GAGGIA
GRUPOS CAFÉ Y REPUESTOS GAGGIA

1

2

3

4

5

6

Photo	LF Code	Suitable for	For machine model
1	**5056548**	GAGGIA 229452400	TITANIUM
2	**5058528**	GAGGIA 11002154	ACCADEMIA
3	**1192067**	GAGGIA 227470150	SYNCRONY LOGIC - TITANIUM
4	**5063244**	GAGGIA 11009276	ACCADEMIA - BRERA - NAVIGLIO - PLATINUM VOGUE - UNICA
5	**1192038**	GAGGIA 11005060	ACCADEMIA - CAPPUCCINO XTWO - UNICA
6	**1192911**	GAGGIA 11005099	ACCADEMIA - CAPPUCCINO XTWO - UNICA

GRUPPI CAFFE' E RICAMBI GAGGIA
COFFEE GROUPS AND SPARE PARTS GAGGIA
KAFFEEGRUPPEN UND ERSATZTEILE GAGGIA
GRUPOS CAFÉ Y REPUESTOS GAGGIA

1

2

3

4

5

6

Photo	LF Code	Suitable for	For machine model
1	**1192197**	GAGGIA 11009266	UNICA
2	**5055414**	GAGGIA 9161.021.150	SYNCRONY
3	**5072594**	GAGGIA 11003075	ACCADEMIA - BRERA - PLATINUM VOGUE - SYNCRONY LOGIC - TITANIUM - UNICA
4	**1192033**	GAGGIA 11003796	SYNCRONY LOGIC
5	**5063245**	GAGGIA 11001840	ACCADEMIA - BRERA - NAVIGLIO - PLATINUM VOGUE - UNICA
6	**5059828**	GAGGIA 149261350	ACCADEMIA - BRERA - NAVIGLIO - PLATINUM VOGUE - UNICA

GRUPPI CAFFE' E RICAMBI GAGGIA
COFFEE GROUPS AND SPARE PARTS GAGGIA
KAFFEEGRUPPEN UND ERSATZTEILE GAGGIA
GRUPOS CAFÉ Y REPUESTOS GAGGIA

1

2

3

4

5

6

Photo	LF Code	Suitable for	For machine model
1	**1086054**	GAGGIA 11023086	ACCADEMIA - BRERA - PLATINUM VOGUE - SYNCRONY LOGIC - UNICA
2	**1192220**	GAGGIA 421944029791	NAVIGLIO
3	**5073718**	GAGGIA 9161.191	ACCADEMIA - BRERA - NAVIGLIO - PLATINUM EVENT - TITANIUM - UNICA
4	**5067819**	GAGGIA 20000440	ACCADEMIA - BRERA - NAVIGLIO - PLATINUM VOGUE - TITANIUM - UNICA
5	**5071535**	GAGGIA 9161.373.050	ACCADEMIA - BRERA - PLATINUM VOGUE - TITANIUM - UNICA
6	**1192023**	GAGGIA 421944034451	BRERA - NAVIGLIO - SYNCRONY LOGIC - UNICA

GRUPPI CAFFE' E RICAMBI GAGGIA
COFFEE GROUPS AND SPARE PARTS GAGGIA
KAFFEEGRUPPEN UND ERSATZTEILE GAGGIA
GRUPOS CAFÉ Y REPUESTOS GAGGIA

1

2

3

4

5

6

Photo	LF Code	Suitable for	For machine model
1	**5064999**	GAGGIA 421944037611	ACCADEMIA
2	**5060580**	GAGGIA 11012382	BRERA
3	**1192219**	GAGGIA 421944053951	NAVIGLIO
4	**1192077**	GAGGIA 11005921	PLATINUM
5	**5500639**	GAGGIA 11004181	SYNCRONY LOGIC - SYNCRONY LOGIC RS
6	**5500672**	GAGGIA 11004183	TITANIUM
6	**1192218**	GAGGIA 11004188	TITANIUM

GRUPPI CAFFE' E RICAMBI GAGGIA SPAGNA
COFFEE GROUPS AND SPARE PARTS GAGGIA SPAGNA
KAFFEEGRUPPEN UND ERSATZTEILE GAGGIA SPAGNA
GRUPOS CAFÉ Y REPUESTOS GAGGIA SPAGNA

1

2

3

Photo	LF Code	Suitable for	For machine model
1	**1201572**	GAGGIA SPAGNA 07716806	BELLA
2	**1349404**	GAGGIA SPAGNA 07976004	NERA
3	**1349405**	GAGGIA SPAGNA 07975910	G6 - KB

GRUPPI CAFFE' E RICAMBI GRIMAC
COFFEE GROUPS AND SPARE PARTS GRIMAC
KAFFEEGRUPPEN UND ERSATZTEILE GRIMAC
GRUPOS CAFÉ Y REPUESTOS GRIMAC

1

2

3

4

5

6

Photo	LF Code	Suitable for	For machine model
1	**1186313**	GRIMAC 1201100017-GR787	ECLISSE - TWENTY - ZOLAI - ZOLAII
2	**1349536**	GRIMAC GR797	ECLISSE - TWENTY - ZOLAI - ZOLAII
3	**1186309**	GRIMAC GR750	ECLISSE - TEN - TWENTY - ZOLAI - ZOLAII
4	**1523451**	GRIMAC	ECLISSE - TWENTY - ZOLAI - ZOLAII
5	**1523452**	GRIMAC	ECLISSE - TWENTY - ZOLAI - ZOLAII
6	**1523453**	GRIMAC	ECLISSE - TWENTY - ZOLAI - ZOLAII

GRUPPI CAFFE' E RICAMBI GRIMAC
COFFEE GROUPS AND SPARE PARTS GRIMAC
KAFFEEGRUPPEN UND ERSATZTEILE GRIMAC
GRUPOS CAFÉ Y REPUESTOS GRIMAC

1

2

3

4

5

6

Photo	LF Code	Suitable for	For machine model
1	**1191022**	GRIMAC GR789	ECLISSE - TWENTY - ZOLAI - ZOLAII
2	**1439533**	GRIMAC 1230800036-GR786	ECLISSE - TWENTY - ZOLAI - ZOLAII
3	**1349007**	GRIMAC 1201300039-GR726	ECLISSE - TEN - TWENTY - ZOLAI - ZOLAII
4	**1439006**	GRIMAC 1231000014-F205	ECLISSE - TWENTY - ZOLAI - ZOLAII
5	**1349537**	GRIMAC GR798	ECLISSE - TWENTY - ZOLAI - ZOLAII
6	**1390501**	GRIMAC 1201300035-VBM100	ECLISSE - TWENTY - ZOLAI - ZOLAII

GRUPPI CAFFE' E RICAMBI GRIMAC
COFFEE GROUPS AND SPARE PARTS GRIMAC
KAFFEEGRUPPEN UND ERSATZTEILE GRIMAC
GRUPOS CAFÉ Y REPUESTOS GRIMAC

1

2

3

4

5

6

Photo	LF Code	Suitable for	For machine model
1	**1192001**	GRIMAC 2200500007-GR501C	ECLISSE - TWENTY - ZOLAI - ZOLAII
2	**1192006**	GRIMAC 1200500018-GR500C	ECLISSE - TEN - TWENTY - ZOLAI - ZOLAII
3	**1027002**	GRIMAC 1231300006-GR794	ECLISSE - TWENTY - ZOLAI - ZOLAII
4	**1027016**	GRIMAC 1201400001-GR717	ECLISSE - TEN - TWENTY - ZOLAI - ZOLAII
5	**1349022**	GRIMAC GR785	ECLISSE - TWENTY - ZOLAI - ZOLAII
6	**1439011**	GRIMAC 2231000004-GR720	ECLISSE - TEN - TWENTY - ZOLAI - ZOLAII

GRUPPI CAFFE' E RICAMBI ISOMAC
COFFEE GROUPS AND SPARE PARTS ISOMAC
KAFFEEGRUPPEN UND ERSATZTEILE ISOMAC
GRUPOS CAFÉ Y REPUESTOS ISOMAC

1

2

3

4

5

6

Photo	LF Code	Suitable for	For machine model
1	**1186313**	ISOMAC ISBUSPREGOM	MILLENNIUM - MONDIALE - TEA - ZAFFIRO
2	**1186592**	ISOMAC ISBUS313116	MILLENNIUM - MONDIALE - TEA - ZAFFIRO
3	**1349536**	ISOMAC ISFRA156	MILLENNIUM - MONDIALE - TEA - ZAFFIRO
4	**1523451**	ISOMAC ISASS395227	MILLENNIUM - MONDIALE - TEA - ZAFFIRO
5	**1523452**	ISOMAC ISASS395228	MILLENNIUM - MONDIALE - TEA - ZAFFIRO
6	**1523453**	ISOMAC ISVAL2PZTTR	MILLENNIUM - MONDIALE - TEA - ZAFFIRO

GRUPPI CAFFE' E RICAMBI ISOMAC
COFFEE GROUPS AND SPARE PARTS ISOMAC
KAFFEEGRUPPEN UND ERSATZTEILE ISOMAC
GRUPOS CAFÉ Y REPUESTOS ISOMAC

1

2

3

4

5

6

Photo	LF Code	Suitable for	For machine model
1	**1192181**	ISOMAC ISCAN304CR	MILLENNIUM - MONDIALE - TEA - ZAFFIRO
2	**1027116**	ISOMAC ISCAN3140694	MILLENNIUM - MONDIALE - TEA - ZAFFIRO
3	**1349022**	ISOMAC ISPOR3140784C	MILLENNIUM - MONDIALE - TEA - ZAFFIRO
4	**1439011**	ISOMAC ISW607	TEA
5	**1439533**	ISOMAC ISTAPPRGOCR	MILLENNIUM - MONDIALE - TEA - ZAFFIRO
6	**1191022**	ISOMAC ISRC-561CR	MILLENNIUM - MONDIALE - TEA - ZAFFIRO

GRUPPI CAFFE' E RICAMBI ISOMAC
COFFEE GROUPS AND SPARE PARTS ISOMAC
KAFFEEGRUPPEN UND ERSATZTEILE ISOMAC
GRUPOS CAFÉ Y REPUESTOS ISOMAC

1

2

3

Photo	LF Code	Suitable for	For machine model
1	**1225002**	ISOMAC ISCAL615CR	MILLENNIUM - MONDIALE - TEA - ZAFFIRO
2	**1349007**	ISOMAC 2956012	TEA
3	**1349537**	ISOMAC ISRAC2626CR	MILLENNIUM - MONDIALE - TEA - ZAFFIRO

GRUPPI CAFFE' E RICAMBI ITALCREM
COFFEE GROUPS AND SPARE PARTS ITALCREM
KAFFEEGRUPPEN UND ERSATZTEILE ITALCREM
GRUPOS CAFÉ Y REPUESTOS ITALCREM

1

2

3

Photo	LF Code	Suitable for	For machine model
1	**1201572**	ITALCREM 07716806	CAPRI
2	**1349404**	ITALCREM 07976004	CAPRI
3	**1349405**	ITALCREM 07975910	CAPRI

GRUPPI CAFFE' E RICAMBI JURA
COFFEE GROUPS AND SPARE PARTS JURA
KAFFEEGRUPPEN UND ZUBEHÖR JURA
GRUPOS CAFÉ Y REPUESTOS JURA

1

2

3

4

5

Photo	LF Code	Suitable for	For machine model
1	**1192198**	JURA 62093	C5 - C50 - C55 - C60 - C65 - C70 - C75 - C9 - C90 - E10 - E20 - E25
2	**1192210**	JURA 63577	C5 - E10 - E50 - E55 - E75 - E80 - S55 - S7 - S70 - S85 - S9 - S90
3	**1192215**	JURA 70939	E10 - E20 - E25 - E30 - E40 - E45 - E5 - E50 - E55 - E60 - E65 - E74
4	**1192199**	JURA 62119	E10 - E20 - E25 - E30 - E40 - E45 - E5 - E50 - E55 - E60 - E65 - E74
5	**1192212**	JURA 61999	E10 - E20 - E25 - E30 - E40 - E45 - E5 - E50 - E55 - E60 - E65 - E74

GRUPPI CAFFE' E RICAMBI KRUPS
COFFEE GROUPS AND SPARE PARTS KRUPS
KAFFEEGRUPPEN UND ZUBEHÖR KRUPS
GRUPOS CAFÉ Y REPUESTOS KRUPS

1

2

3

Photo	LF Code	Suitable for	For machine model
1	**5500639**	KRUPS MS-0909505	PALATINO 905
2	**D192003**	KRUPS MS-0084378	PIXIE
3	**5081885**	KRUPS MS-0072437	PIXIE

GRUPPI CAFFE' E RICAMBI LAVAZZA
COFFEE GROUPS AND SPARE PARTS LAVAZZA
KAFFEEGRUPPEN UND ERSATZTEILE LAVAZZA
GRUPOS CAFÉ Y REPUESTOS LAVAZZA

1

2

3

4

Photo	LF Code	Suitable for	For machine model
1	**5066575**	LAVAZZA 10066194	LB2800 - LB4100 - LB4103 - LB4700 - LB4700R - LB4701R
2	**5068856**	LAVAZZA 10066939	LB2800 - LB4100 - LB4103 - LB4600 - LB4700 - LB4701R - LB4800
3	**5066576**	LAVAZZA 10066196	LB2800 - LB4100 - LB4103 - LB4700 - LB4700R - LB4701R
4	**1192191**	LAVAZZA 10084278	LB4600

GRUPPI CAFFE' E RICAMBI LAVAZZA
COFFEE GROUPS AND SPARE PARTS LAVAZZA
KAFFEEGRUPPEN UND ERSATZTEILE LAVAZZA
GRUPOS CAFÉ Y REPUESTOS LAVAZZA

1

2

3

4

Photo	LF Code	Suitable for	For machine model
1	**1027016**	LAVAZZA 10066184	LB2800 - LB4700 - LB4700R - LB4701R
2	**1192214**	LAVAZZA 10084108	LB4600
3	**1439011**	LAVAZZA 10066192	LB2800 - LB4700 - LB4700R - LB4701R
4	**1349007**	LAVAZZA 10084085	LB4600

GRUPPI CAFFE' E RICAMBI MAIRALI
COFFEE GROUPS AND SPARE PARTS MAIRALI
KAFFEEGRUPPEN UND ERSATZTEILE MAIRALI
GRUPOS CAFÉ Y REPUESTOS MAIRALI

1

2

3

Photo	LF Code	Suitable for	For machine model
1	**1201572**	MAIRALI 07716806	GIULIETTA
2	**1349404**	MAIRALI 07976004	GIULIETTA
3	**1349405**	MAIRALI 07975910	GIULIETTA

GRUPPI CAFFE' E RICAMBI MARZOCCO
COFFEE GROUPS AND SPARE PARTS MARZOCCO
KAFFEEGRUPPEN UND ERSATZTEILE MARZOCCO
GRUPOS CAFÉ Y REPUESTOS MARZOCCO

1

Photo	LF Code	Suitable for	For machine model
1	**1186775**	MARZOCCO F.1.012	GS/3

GRUPPI CAFFE' E RICAMBI NUOVA SIMONELLI
COFFEE GROUPS AND SPARE PARTS NUOVA SIMONELLI
KAFFEEGRUPPEN UND ERSATZTEILE NUOVA SIMONELLI
GRUPOS CAFÉ Y REPUESTOS NUOVA SIMONELLI

1

Photo	LF Code	Suitable for	For machine model
1	**1018507**	NUOVA SIMONELLI 07300166	AURELIA - AURELIAII - MACCUP - OPTIMA - PERSONAL

GRUPPI CAFFE' E RICAMBI ORCHESTRALE
COFFEE GROUPS AND SPARE PARTS ORCHESTRALE
KAFFEEGRUPPEN UND ERSATZTEILE ORCHESTRALE
GRUPOS CAFÉ Y REPUESTOS ORCHESTRALE

1

2

Photo	LF Code	Suitable for	For machine model
1	**1027016**	ORCHESTRALE D27119	ETNICA - PHONICA
2	**1439011**	ORCHESTRALE D27120	ETNICA - PHONICA

GRUPPI CAFFE' E RICAMBI PAVONI
COFFEE GROUPS AND SPARE PARTS PAVONI
KAFFEEGRUPPEN UND ERSATZTEILE PAVONI
GRUPOS CAFÉ Y REPUESTOS PAVONI

1

2

3

4

5

6

Photo	LF Code	Suitable for	For machine model
1	**1192145**	PAVONI 0R21310040	MICROPOD
2	**1192146**	PAVONI 0R21310050	MICROPOD
3	**1225049**	PAVONI 0R1239003A	MICROPOD
4	**1192142**	PAVONI 0R12390010	MICROPOD
5	**1192143**	PAVONI 0R12390020	MICROPOD
6	**1192144**	PAVONI 0R1138016Z	MICROPOD

GRUPPI CAFFE' E RICAMBI PAVONI
COFFEE GROUPS AND SPARE PARTS PAVONI
KAFFEEGRUPPEN UND ERSATZTEILE PAVONI
GRUPOS CAFÉ Y REPUESTOS PAVONI

1

2

3

Photo	LF Code	Suitable for	For machine model
1	**1192200**	PAVONI 314095	LEVA
2	**1192202**	PAVONI 3141244	LEVA
3	**5029493**	PAVONI 371133	EUROPICCOLA - PROFESSIONAL - ROMANTICA - STRADIVARI

GRUPPI CAFFE' E RICAMBI PAVONI
COFFEE GROUPS AND SPARE PARTS PAVONI
KAFFEEGRUPPEN UND ERSATZTEILE PAVONI
GRUPOS CAFÉ Y REPUESTOS PAVONI

1

2

3

4

5

6

Photo	LF Code	Suitable for	For machine model
1	**1321002**	PAVONI 314044	EUROPICCOLA - PROFESSIONAL - ROMANTICA - STRADIVARI
2	**5501139**	PAVONI 371132	EUROPICCOLA - PROFESSIONAL - ROMANTICA - STRADIVARI
3	**1192015**	PAVONI 3140453	EUROPICCOLA - PROFESSIONAL - ROMANTICA - STRADIVARI
4	**5032977**	PAVONI 3954004	EUROPICCOLA - PROFESSIONAL - ROMANTICA
5	**5501148**	PAVONI 312382	EUROPICCOLA - PROFESSIONAL - ROMANTICA - STRADIVARI
6	**1528024**	PAVONI 313002	EUROPICCOLA - PROFESSIONAL - ROMANTICA - STRADIVARI

GRUPPI CAFFE' E RICAMBI PAVONI
COFFEE GROUPS AND SPARE PARTS PAVONI
KAFFEEGRUPPEN UND ERSATZTEILE PAVONI
GRUPOS CAFÉ Y REPUESTOS PAVONI

1

2

3

4

5

6

Photo	LF Code	Suitable for	For machine model
1	**1186313**	PAVONI 312402	BAR - BART - PUB - HOTEL
2	**1186592**	PAVONI 313116	BAR - BART - PUB - HOTEL
3	**1186309**	PAVONI 314070	BAR - BART - PUB - HOTEL
4	**1523451**	PAVONI 395227	BAR - BART - PUB - HOTEL
5	**1523452**	PAVONI 395228	BAR - BART - PUB - HOTEL
6	**1523453**	PAVONI 395229	BAR - BART - PUB - HOTEL

GRUPPI CAFFE' E RICAMBI PAVONI
COFFEE GROUPS AND SPARE PARTS PAVONI
KAFFEEGRUPPEN UND ERSATZTEILE PAVONI
GRUPOS CAFÉ Y REPUESTOS PAVONI

1

2

3

4

5

Photo	LF Code	Suitable for	For machine model
1	**1027002**	PAVONI 3140734	BAR - BART - PUB - HOTEL
2	**1027116**	PAVONI 3140694	BAR - BART - PUB - HOTEL
3	**1349022**	PAVONI 3140784	BAR - BART - PUB - HOTEL
4	**1439006**	PAVONI 3140744	BAR - BART - PUB - HOTEL
5	**1439533**	PAVONI 3132064	BAR - BART - PUB - HOTEL

GRUPPI CAFFE' E RICAMBI PROMAC
COFFEE GROUPS AND SPARE PARTS PROMAC
KAFFEEGRUPPEN UND ERSATZTEILE PROMAC
GRUPOS CAFÉ Y REPUESTOS PROMAC

1

Photo	LF Code	Suitable for	For machine model
1	**1349037**	PROMAC 10090002	CLUB - COMPACT - GREEN

GRUPPI CAFFE' E RICAMBI RANCILIO
COFFEE GROUPS AND SPARE PARTS RANCILIO
KAFFEEGRUPPEN UND ERSATZTEILE RANCILIO
GRUPOS CAFÉ Y REPUESTOS RANCILIO

1

Photo	LF Code	Suitable for	For machine model
1	**1349037**	RANCILIO 10090002	CLASSE10 - CLASSE6 - CLASSE7 - CLASSE8 - CLASSE9 - EPOCA

GRUPPI CAFFE' E RICAMBI RDL
COFFEE GROUPS AND SPARE PARTS RDL
KAFFEEGRUPPEN UND ERSATZTEILE RDL
GRUPOS CAFÉ Y REPUESTOS RDL

1

2

3

4

5

6

Photo	LF Code	Suitable for	For machine model
1	**1192145**	RDL 21310040	MINI - MINICAP
2	**1192146**	RDL 21310050	MINI - MINICAP
3	**1225049**	RDL 1239003A	MINI
4	**1192142**	RDL 12390010	MAXI - MINI
5	**1192143**	RDL 12390020	MAXI - MINI
6	**1192144**	RDL 1138016Z	MAXI - MINI

GRUPPI CAFFE' E RICAMBI RENEKA
COFFEE GROUPS AND SPARE PARTS RENEKA
KAFFEEGRUPPEN UND ERSATZTEILE RENEKA
GRUPOS CAFÉ Y REPUESTOS RENEKA

1

2

3

4

5

6

Photo	LF Code	Suitable for	For machine model
1	**1186313**	RENEKA AT7479969	ATALANTE - AMICI
2	**1186592**	RENEKA AT7479942	ATALANTE - AMICI
3	**1349536**	RENEKA AT7479945	ATALANTE - AMICI
4	**1523451**	RENEKA AT7479937	ATALANTE - AMICI
5	**1523452**	RENEKA AT7479946	ATALANTE - AMICI
6	**1523453**	RENEKA AT7479943	ATALANTE - AMICI

GRUPPI CAFFE' E RICAMBI RENEKA
COFFEE GROUPS AND SPARE PARTS RENEKA
KAFFEEGRUPPEN UND ERSATZTEILE RENEKA
GRUPOS CAFÉ Y REPUESTOS RENEKA

1

2

3

4

5

6

Photo	LF Code	Suitable for	For machine model
1	**1027002**	RENEKA AT7479957	ATALANTE - AMICI
2	**1027016**	RENEKA AT7479956	ATALANTE - AMICI
3	**1349022**	RENEKA AT7479967	ATALANTE - AMICI
4	**1349537**	RENEKA AT7479961	ATALANTE - AMICI
5	**1439533**	RENEKA AT7479971	ATALANTE - AMICI
6	**1225002**	RENEKA AT7479948	ATALANTE - AMICI

GRUPPI CAFFE' E RICAMBI ROYAL
COFFEE GROUPS AND SPARE PARTS ROYAL
KAFFEEGRUPPEN UND ERSATZTEILE ROYAL
GRUPOS CAFÉ Y REPUESTOS ROYAL

1

2

3

4

5

6

Photo	LF Code	Suitable for	For machine model
1	**1192168**	ROYAL	VALLELUNGA LEVA
2	**1192184**	ROYAL	VALLELUNGA LEVA
3	**1192176**	ROYAL	VALLELUNGA LEVA
3	**1192177**	ROYAL	VALLELUNGA LEVA
4	**1192185**	ROYAL	VALLELUNGA LEVA
5	**1192178**	ROYAL	VALLELUNGA LEVA
6	**1225053**	ROYAL	VALLELUNGA LEVA

GRUPPI CAFFE' E RICAMBI ROYAL
COFFEE GROUPS AND SPARE PARTS ROYAL
KAFFEEGRUPPEN UND ERSATZTEILE ROYAL
GRUPOS CAFÉ Y REPUESTOS ROYAL

1

2

3

4

5

6

Photo	LF Code	Suitable for	For machine model
1	**1186313**	ROYAL	DIADEMA - SYNCHRO
2	**1523451**	ROYAL 0530001	DIADEMA - SYNCHRO
3	**1523452**	ROYAL 0530020	DIADEMA - SYNCHRO
4	**1192179**	ROYAL	VALLELUNGA LEVA
5	**5500730**	ROYAL	VALLELUNGA LEVA
6	**1192167**	ROYAL	VALLELUNGA LEVA

GRUPPI CAFFE' E RICAMBI ROYAL
COFFEE GROUPS AND SPARE PARTS ROYAL
KAFFEEGRUPPEN UND ERSATZTEILE ROYAL
GRUPOS CAFÉ Y REPUESTOS ROYAL

1

2

3

4

5

6

Photo	LF Code	Suitable for	For machine model
1	**1027002**	ROYAL 0530040	DIADEMA - SYNCHRO
2	**1027016**	ROYAL 0520030	DIADEMA - SYNCHRO
3	**1349022**	ROYAL 0530090	DIADEMA - SYNCHRO
4	**1439011**	ROYAL	DIADEMA - SYNCHRO
5	**1439006**	ROYAL 0530060	DIADEMA - SYNCHRO
6	**1349536**	ROTAL 0530047	DIADEMA - SYNCHRO

GRUPPI CAFFE' E RICAMBI SAB ITALIA
COFFEE GROUPS AND SPARE PARTS SAB ITALIA
KAFFEEGRUPPEN UND ERSATZTEILE SAB ITALIA
GRUPOS CAFÉ Y REPUESTOS SAB ITALIA

1

2

3

Photo	LF Code	Suitable for	For machine model
1	**1027016**	SAB ITALIA TM-CAN3140694	MODERNA - E96 - ELLIPSE
2	**1439011**	SAB ITALIA TM-TAP0001	MODERNA - E96 - ELLIPSE
3	**1349007**	SAB ITALIA TM-W617618	MODERNA - E96 - ELLIPSE

GRUPPI CAFFE' E RICAMBI SAECO
COFFEE GROUPS AND SPARE PARTS SAECO
KAFFEEGRUPPEN UND ERSATZTEILE SAECO
GRUPOS CAFÉ Y REPUESTOS SAECO

1 2 3 4 5 6

Photo	LF Code	Suitable for	For machine model
1	**5056548**	SAECO 229452400	INCANTO
2	**5058528**	SAECO 11002154	EXPRELIA - MINUTO FOCUS - ODEA GIRO - TALEA - TALEA GIRO
3	**1192038**	SAECO 11005060	ESPRESSO ITALIANO - EXPRELIA - PRIMEA
4	**1192911**	SAECO 9011.099	EXPRELIA - INCANTO - MAGIC - PRIMEA - ROYAL NEW - VIENNA
5	**1192025**	SAECO 0311.024.150	CAFE CREMA - CAFÈ IT
6	**1192035**	SAECO 322001101	DIGITALGETTONIERA

GRUPPI CAFFE' E RICAMBI SAECO
COFFEE GROUPS AND SPARE PARTS SAECO
KAFFEEGRUPPEN UND ERSATZTEILE SAECO
GRUPOS CAFÉ Y REPUESTOS SAECO

1 2 3 4 5

Photo	LF Code	Suitable for	For machine model
1	**1192029**	SAECO 9169.A14.060	MAGIC - MAGIC ROMA - ROYAL - ROYAL PROFESSIONAL - STRATOS
2	**1192913**	SAECO 9169.A14.150	MAGIC - ROYAL PROFESSIONAL - STRATOS
3	**1192067**	SAECO 227470150	INCANTO - ROYAL NEW
4	**5063244**	SAECO 11002617	EXPRELIA - INTELIA - MOLTIO - SYNTIA - TALEA - XELSIS - XSMALL
5	**1192023**	SAECO 421944034451	INTELIA - MAGIC - MOLTIO - ROYAL - ROYAL NEW - ROYAL PROFESSIONAL

GRUPPI CAFFE' E RICAMBI SAECO
COFFEE GROUPS AND SPARE PARTS SAECO
KAFFEEGRUPPEN UND ERSATZTEILE SAECO
GRUPOS CAFÉ Y REPUESTOS SAECO

1 2 3 4 5 6

Photo	LF Code	Suitable for	For machine model
1	**1192912**	SAECO 0301.R04.150	MAGIC - ROYAL - ROYAL PROFESSIONAL - STRATOS
2	**1192026**	SAECO 9161.064.150	MAGIC - ROYAL - ROYAL PROFESSIONAL - STRATOS
3	**5067819**	SAECO 20000440	EXPRELIA - INTELIA - MOLTIO - ROYAL NEW - SYNTIA
4	**1192066**	SAECO 9161.069.150	MAGIC - ROYAL PROFESSIONAL - STRATOS
5	**5071535**	SAECO 9161.373.050	EXPRELIA - INTELIA - MOLTIO - SYNTIA - TALEA - XELSIS - XSMALL
6	**5059828**	SAECO 149261350	EXPRELIA - INTELIA - MOLTIO - SYNTIA - TALEA - XSMALL

GRUPPI CAFFE' E RICAMBI SAECO
COFFEE GROUPS AND SPARE PARTS SAECO
KAFFEEGRUPPEN UND ERSATZTEILE SAECO
GRUPOS CAFÉ Y REPUESTOS SAECO

1

2

3

4

5

Photo	LF Code	Suitable for	For machine model
1	**1192024**	SAECO 9161.034.150	MAGIC - ROYAL - STRATOS
2	**5061293**	SAECO 11003789	ROYAL NEW - ROYAL PROFESSIONAL
3	**1192914**	SAECO 0701.R04.060	MAGIC - ROYAL
4	**7102289**	SAECO 11010544	ODEA GO
5	**1090039**	SAECO 222870250	EXPRELIA - INCANTO - INTELIA - MOLTIO - ODEA - PRIMEA - SYNTIA

GRUPPI CAFFE' E RICAMBI SAECO
COFFEE GROUPS AND SPARE PARTS SAECO
KAFFEEGRUPPEN UND ERSATZTEILE SAECO
GRUPOS CAFÉ Y REPUESTOS SAECO

1

2

3

4

5

Photo	LF Code	Suitable for	For machine model
1	**1192039**	SAECO 322001050	TWIN
2	**1086035**	SAECO 9161.306.150	MAGIC - MAGIC COMFORT - ROYAL PROFESSIONAL - ROYAL OFFICE
3	**1086054**	SAECO 11023086	EXPRELIA - INTELIA - MOLTIO - ROYAL NEW - SYNTIA - XELSIS - XSMALL
4	**1192220**	SAECO 421944029791	INTELIA - MINUTO CAPPUCCINO - MINUTO CLASS - MINUTO FOCUS
5	**5073718**	SAECO 9161.191	EXPRELIA - INCANTO NEW - INTELIA - MAGIC - MOLTIO - ROYAL NEW

GRUPPI CAFFE' E RICAMBI SAECO
COFFEE GROUPS AND SPARE PARTS SAECO
KAFFEEGRUPPEN UND ERSATZTEILE SAECO
GRUPOS CAFÉ Y REPUESTOS SAECO

1

2

3

4

5

Photo	LF Code	Suitable for	For machine model
1	**5064999**	SAECO 11012810	EXPRELIA - XELSIS
2	**5060580**	SAECO 11012382	INTELIA - SYNTIA - XSMALL
3	**1192197**	SAECO 11009266	ESPRESSO ITALIANO
4	**1192219**	SAECO 421944053951	INTELIA EVO2 - MOLTIO
5	**5500489**	SAECO 11003800	ROYAL NEW - ROYAL PROFESSIONAL

GRUPPI CAFFE' E RICAMBI SAECO
COFFEE GROUPS AND SPARE PARTS SAECO
KAFFEEGRUPPEN UND ERSATZTEILE SAECO
GRUPOS CAFÉ Y REPUESTOS SAECO

1

2

3

4

5

6

Photo	LF Code	Suitable for	For machine model
1	**5055414**	SAECO 9161.021.150	MAGIC - ROYAL - ROYAL PROFESSIONAL - ROYAL OFFICE - STRATOS
2	**5072594**	SAECO 421944014611	EXPRELIA - INTELIA - MOLTIO - ROYAL NEW - SYNTIA - TALEA - XSMALL
3	**1192021**	SAECO 9161.195.150	MAGIC - ROYAL PROFESSIONAL - STRATOS - VIENNA - VIENNA DELUXE
4	**1192033**	SAECO 9161.193.150	MAGIC - ROYAL - ROYAL NEW - ROYAL PROFESSIONAL - STRATOS - VIENNE
5	**5063245**	SAECO 11001840	EXPRELIA - INTELIA - MOLTIO - SYNTIA - TALEA - XELSIS - XSMALL
6	**1192016**	SAECO 20006884	ODEA GIRO

GRUPPI CAFFE' E RICAMBI SAECO
COFFEE GROUPS AND SPARE PARTS SAECO
KAFFEEGRUPPEN UND ERSATZTEILE SAECO
GRUPOS CAFÉ Y REPUESTOS SAECO

1

2

3

4

5

6

Photo	LF Code	Suitable for	For machine model
1	**5500639**	SAECO 11004181	CAFE CREMA - TREVI DIGITAL - VIA ROMA - VIENNA - VIENNA DE LUXE
2	**1192018**	SAECO 11004189	MAGIC - ROYAL - STRATOS
3	**1192077**	SAECO 11002145	ODEA - ODEA GIRO - PRIMEA - PRIMEA 2007 - TALEA - TALEA GIRO
4	**5500672**	SAECO 11004183	INCANTO - MIGROS - TREVI - TREVI DIGITAL - VIENNA DELUXE
5	**1192037**	SAECO 11003426	INCANTO
6	**1192218**	SAECO 11004188	INCANTO RS SBS

GRUPPI CAFFE' E RICAMBI SAN MARCO
COFFEE GROUPS AND SPARE PARTS SAN MARCO
KAFFEEGRUPPEN UND ERSATZTEILE SAN MARCO
GRUPOS CAFÉ Y REPUESTOS SAN MARCO

1

2

3

4

5

6

Photo	LF Code	Suitable for	For machine model
1	**1202001**	SAN MARCO 206272	NEW105 - 100 - 105 - 85 - 95
2	**1192011**	SAN MARCO 502032	LEVA
3	**1192012**	SAN MARCO 502024	LEVA
4	**1225013**	SAN MARCO 502030	LEVA
5	**1449571**	SAN MARCO	85 - 95
6	**1449570**	SAN MARCO 205751	85 - 95

GRUPPI CAFFE' E RICAMBI SAN MARCO
COFFEE GROUPS AND SPARE PARTS SAN MARCO
KAFFEEGRUPPEN UND ERSATZTEILE SAN MARCO
GRUPOS CAFÉ Y REPUESTOS SAN MARCO

1 2 3 4 5 6

Photo	LF Code	Suitable for	For machine model
1	**1449372**	SAN MARCO 205258	FCS
2	**1186132**	SAN MARCO 205551	LEVA
3	**1346506**	SAN MARCO 205175	FCS
4	**1523420**	SAN MARCO 205027	LEVA
5	**1186120**	SAN MARCO 205060	LEVA
6	**1349073**	SAN MARCO 205164	FCS

GRUPPI CAFFE' E RICAMBI SANREMO
COFFEE GROUPS AND SPARE PARTS SANREMO
KAFFEEGRUPPEN UND ERSATZTEILE SANREMO
GRUPOS CAFÉ Y REPUESTOS SANREMO

1 2

Photo	LF Code	Suitable for	For machine model
1	**1027116**	SANREMO 10052133A	MILANO LX - TORINO - VERONA
2	**1439011**	SANREMO 10052132A	MILANO LX - TORINO - VERONA

GRUPPI CAFFE' E RICAMBI SCALA
COFFEE GROUPS AND SPARE PARTS SCALA
KAFFEEGRUPPEN UND ERSATZTEILE SCALA
GRUPOS CAFÉ Y REPUESTOS SCALA

1 2 3 4 5 6

Photo	LF Code	Suitable for	For machine model
1	**1439533**	SCALA C-0035	BUTTERFLY - CARMEN - EROICA
2	**1349536**	SCALA C-0040	BUTTERFLY - EROICA
3	**1186313**	SCALA C-0033	BUTTERFLY - EROICA
4	**1523451**	SCALA C-0044	BUTTERFLY - EROICA
5	**1523008**	SCALA C-0046	BUTTERFLY - EROICA
6	**1523453**	SCALA C-0038	BUTTERFLY - EROICA

GRUPPI CAFFE' E RICAMBI SCALA
COFFEE GROUPS AND SPARE PARTS SCALA
KAFFEEGRUPPEN UND ERSATZTEILE SCALA
GRUPOS CAFÉ Y REPUESTOS SCALA

1

2

3

4

5

6

Photo	LF Code	Suitable for	For machine model
1	**1192001**	SCALA C-0214	BUTTERFLY - EROICA
2	**1027018**	SCALA C-0307	BUTTERFLY - EROICA
3	**1027002**	SCALA C-0037	BUTTERFLY - EROICA
4	**1027016**	SCALA C-0323	BUTTERFLY - CARMEN - EROICA
5	**1349022**	SCALA C-0031	BUTTERFLY - CARMEN - EROICA
6	**1349537**	SCALA C-0041	BUTTERFLY - EROICA

GRUPPI CAFFE' E RICAMBI VIBIEMME
COFFEE GROUPS AND SPARE PARTS VIBIEMME
KAFFEEGRUPPEN UND ERSATZTEILE VIBIEMME
GRUPOS CAFÉ Y REPUESTOS VIBIEMME

1

2

3

4

5

Photo	LF Code	Suitable for	For machine model
1	**1192178**	VIBIEMME LEVAGRPISTONE	REPLICA
2	**1225053**	VIBIEMME ALBEROGRPISTO	REPLICA
3	**1192176**	VIBIEMME VITEPERNGRDPI	REPLICA
4	**1192177**	VIBIEMME VITEPERNGRPIS	REPLICA
5	**1192179**	VIBIEMME PISTONE	REPLICA

GRUPPI CAFFE' E RICAMBI VIBIEMME
COFFEE GROUPS AND SPARE PARTS VIBIEMME
KAFFEEGRUPPEN UND ERSATZTEILE VIBIEMME
GRUPOS CAFÉ Y REPUESTOS VIBIEMME

1

2

3

4

5

Photo	LF Code	Suitable for	For machine model
1	**5500730**	VIBIEMME CAMICIAGRPIST	REPLICA
2	**1192185**	VIBIEMME BUSSOLAGRPIST	REPLICA
3	**1192167**	VIBIEMME DISTANZIALEPI	REPLICA
4	**1192168**	VIBIEMME SNODOGRPISTON	REPLICA
5	**1192184**	VIBIEMME ANELLOGRPISTO	REPLICA

GRUPPI CAFFE' E RICAMBI VIBIEMME
COFFEE GROUPS AND SPARE PARTS VIBIEMME
KAFFEEGRUPPEN UND ERSATZTEILE VIBIEMME
GRUPOS CAFÉ Y REPUESTOS VIBIEMME

1

2

3

4

5

Photo	LF Code	Suitable for	For machine model
1	**1186313**	VIBIEMME RACCBUPRGO	CUBO - DOMOBAR - DOMOBARJUNIOR - DOMOBARSUPER - REPLICA
2	**1186309**	VIBIEMME RACCPOGU	KOMETA - MERCURY - SILVER
3	**1523057**	VIBIEMME ASSVALVINF	CUBO - DOMOBAR - DOMOBARJUNIOR - DOMOBARSUPER - REPLICA
4	**1523053**	VIBIEMME ASSVALVEROG	CUBO - DOMOBAR - DOMOBARJUNIOR - DOMOBARSUPER - REPLICA
5	**1523453**	VIBIEMME ASSVALVSCAR	CUBO - DOMOBAR - DOMOBARJUNIOR - DOMOBARSUPER - DOSAPLUS

GRUPPI CAFFE' E RICAMBI VIBIEMME
COFFEE GROUPS AND SPARE PARTS VIBIEMME
KAFFEEGRUPPEN UND ERSATZTEILE VIBIEMME
GRUPOS CAFÉ Y REPUESTOS VIBIEMME

1

2

3

4

5

6

Photo	LF Code	Suitable for	For machine model
1	**1192171**	VIBIEMME RACCCASUTEPI	CHIMAERA - CUBO - DOMOBAR - DOMOBARJUNIOR - DOMOBARSUPER
2	**1192180**	VIBIEMME RACCCASU	CHIMAERA - CUBO - DOMOBAR - DOMOBARJUNIOR - DOMOBARSUPER
3	**1192183**	VIBIEMME RACCCACOGR	CUBO - DOMOBAR - DOMOBARJUNIOR - DOMOBARSUPER - REPLICA
4	**1439533**	VIBIEMME RACCTAPRGO	CUBO - DOMOBAR - DOMOBARJUNIOR - DOMOBARSUPER - REPLICA
5	**1192169**	VIBIEMME RACCATN	CHIMAERA - CUBO - DOMOBARSUPER - DOSAPLUS - MERCURY
6	**1192166**	VIBIEMME DISTANZIALEVO	EVOLUTION - KOMETA - LOLLO - MINIMAX - SILVER

GRUPPI CAFFE' E RICAMBI VIBIEMME
COFFEE GROUPS AND SPARE PARTS VIBIEMME
KAFFEEGRUPPEN UND ERSATZTEILE VIBIEMME
GRUPOS CAFÉ Y REPUESTOS VIBIEMME

1

2

3

4

5

6

Photo	LF Code	Suitable for	For machine model
1	**1192181**	VIBIEMME RACCCAIN	CUBO - DOMOBAR - DOMOBARJUNIOR - DOMOBARSUPER - REPLICA
2	**1192173**	VIBIEMME ASSTASCAUTKRN	EVOLUTION - KOMETA - LOLLO - MINIMAX - SILVER
3	**1192174**	VIBIEMME ASSTASCAUTAUS	CHIMAERA - CUBO - DOMOBARSUPER - DOSAPLUS - MERCURY
4	**1192175**	VIBIEMME ASSTASCAUTKO	EVOLUTION - KOMETA - LOLLO - MINIMAX - SILVER
5	**1349007**	VIBIEMME ASSTASCAUT	CHIMAERA - CUBO - DOMOBARSUPER - DOSAPLUS - MERCURY
6	**1349537**	VIBIEMME ASSTASC	CUBO - DOMOBAR - DOMOBARJUNIOR - DOMOBARSUPER - REPLICA

GRUPPI CAFFE' E RICAMBI VIBIEMME
COFFEE GROUPS AND SPARE PARTS VIBIEMME
KAFFEEGRUPPEN UND ERSATZTEILE VIBIEMME
GRUPOS CAFÉ Y REPUESTOS VIBIEMME

1

2

3

Photo	LF Code	Suitable for	For machine model
1	**1192170**	VIBIEMME COPEINFCROGKO	EVOLUTION - KOMETA - LOLLO - MINIMAX - SILVER
2	**1192172**	VIBIEMME COPEELEGRIKO	EVOLUTION - KOMETA - LOLLO - MINIMAX - SILVER
3	**1192182**	VIBIEMME COPEELEGRINEW	CUBO - DOMOBARSUPER - EVOLUTION - KOMETA - LOLLO

GRUPPI CAFFE' E RICAMBI VICTORIA ARDUINO
COFFEE GROUPS AND SPARE PART VICTORIA ARDUINO
KAFFEEGRUPPEN UND ERSATZTEILE VICTORIA ARDUINO
GRUPOS CAFÉ Y REPUESTOS VICTORIA ARDUINO

1

2

3

4

5

6

Photo	LF Code	Suitable for	For machine model
1	**1192200**	VICTORIA ARDUINO 17000027	ATHENA LEVA
2	**1192202**	VICTORIA ARDUINO 17000028	ATHENA LEVA
3	**1225053**	VICTORIA ARDUINO 17010019	ATHENA LEVA
4	**1192178**	VICTORIA ARDUINO 17010025	ATHENA LEVA
5	**1192179**	VICTORIA ARDUINO 17010017	ATHENA LEVA
6	**1018507**	VICTORIA ARDUINO 07300166	ADONIS

GRUPPI CAFFE' E RICAMBI VISACREM
COFFEE GROUPS AND SPARE PARTS VISACREM
KAFFEEGRUPPEN UND ERSATZTEILE VISACREM
GRUPOS CAFÉ Y REPUESTOS VISACREM

1

2

3

Photo	LF Code	Suitable for	For machine model
1	**1201572**	VISACREM 07716806	NERA
2	**1349404**	VISACREM 07976004	NERA
3	**1349405**	VISACREM 07975910	NERA

GRUPPI CAFFE' E RICAMBI WEGA
COFFEE GROUPS AND SPARE PARTS WEGA
KAFFEEGRUPPEN UND ERSATZTEILE WEGA
GRUPOS CAFÉ Y REPUESTOS WEGA

1

2

3

4

Photo	LF Code	Suitable for	For machine model
1	**1192200**	WEGA WY15026001	ALE
2	**5500730**	WEGA WY56352	ALE
3	**1192202**	WEGA WY56351	ALE
4	**1192203**	WEGA WY56354001	ALE

GRUPPI CAFFE' E RICAMBI WEGA
COFFEE GROUPS AND SPARE PARTS WEGA
KAFFEEGRUPPEN UND ERSATZTEILE WEGA
GRUPOS CAFÉ Y REPUESTOS WEGA

1

2

3

4

5

Photo	LF Code	Suitable for	For machine model
1	**1191023**	WEGA WY27421024	AIRY - ATLAS - COLOSSEUM - COMBINOVA - ESPRESSA
2	**1439533**	WEGA WY27421023	AIRY - ATLAS - COLOSSEUM - COMBINOVA - ESPRESSA
3	**1390501**	WEGA WY27421015	AIRY - ATLAS - COLOSSEUM - COMBINOVA - ESPRESSA
4	**1186313**	WEGA WY27421021	AIRY - ATLAS - COLOSSEUM - COMBINOVA - ESPRESSA
5	**1186309**	WEGA WY27421010	AIRY - ATLAS - COLOSSEUM - COMBINOVA - ESPRESSA

GRUPPI CAFFE' E RICAMBI WEGA
COFFEE GROUPS AND SPARE PARTS WEGA
KAFFEEGRUPPEN UND ERSATZTEILE WEGA
GRUPOS CAFÉ Y REPUESTOS WEGA

1

2

3

4

5

6

Photo	LF Code	Suitable for	For machine model
1	**1027002**	WEGA WY27421016	AIRY - ATLAS - COLOSSEUM - COMBINOVA - ESPRESSA
2	**1027016**	WEGA WY27119	COLOSSEUM - COMBINOVA - ESPRESSA - EURO2000
3	**1027003**	WEGA WY25739502	START - VENUS
4	**1349022**	WEGA WY27421020	AIRY - ATLAS - COLOSSEUM - COMBINOVA - ESPRESSA
5	**1439006**	WEGA WY27421018	AIRY - ATLAS - COLOSSEUM - COMBINOVA - ESPRESSA
6	**1439011**	WEGA WY27120	AIRY - ATLAS - COLOSSEUM - COMBINOVA - ESPRESSA

GUARNIZIONI A FUNGO
MUSHROOM GASKETS
PILZDICHTUNGEN
JUNTAS TIPO HONGO

1

2

3

4

5

6

Photo	LF Code	Dimensions	Material	Suitable for	For machine model
1	**1786282**	ø 3.5/6 mm - H 8 mm	SILICON	DELONGHI 5332148400	ECOV310AZ - EC155 - EC300M - ESAM5400 - ESAM5400EX
1	**D548004**	ø 6.3/3.2 mm - H 8 mm	SILICONE	DELONGHI 5332289700	ECI341.BK - EC680.M - EC820.B - EC850.M
2	**1786331**	ø 8/6 mm - H 9 mm	EPDM	GAGGIA EF0012	NEW ESPRESSO 06 DOSE
3	**1786080**	ø 6/8 mm - H 9 mm	SILICON	GRIMAC 1110100001-MG015/2	AMBRA - DADAVAPORDOUBLE - OPALE - TERRY
4	**1786314**	ø 6/7 mm - H 8 mm	SILICON	ISOMAC IS000805	GIADA - MAVERICK
5	**1786162**	ø 6/9 mm - H 8.5 mm	SILICON	NUOVA SIMONELLI 02540004	JAZZ
3	**1786080**	ø 6/8 mm - H 9 mm	SILICON	PAVONI 0R13330010	MICROPOD
3	**1786080**	ø 6/8 mm - H 9 mm	SILICON	RDL 13330010	MAXI - MINI - MINICAP - SWEET
2	**1786331**	ø 8/6 mm - H 9 mm	EPDM	SAECO EF0012	NINA - NINA BAR
6	**1192088**	ø 2.8/4.6 mm - H 6.6 mm	SILICON	SAECO 9161.320	IDEA - ROYALOFFICE
1	**1786160**	ø 6/9 mm - H 9 mm	SILICON	SAECO WGI25010	MINI-OFFICE
5	**1786162**	ø 6/9 mm - H 8.5 mm	SILICON	VICTORIA ARDUINO 02540004	VENUSCENTURY

GUARNIZIONI CIECHE
BLIND GASKETS
BLINDDICHTUNGEN
JUNTAS CIEGAS

1

2

3

4

5

Photo	LF Code	Dimensions	Material	Suitable for	For machine model
1	**1786306**	ø 12x6 mm	VITON	FRACINO FC198A	BAMBINO
2	**1786220**	ø 9.2x4.6 mm	VITON	FAEMA 402203000	EMBLEMA
2	**1786220**	ø 9.2x4.6 mm	VITON	CIMBALI 402-203-000	M39GT
3	**1186729**	ø 11.5x2 mm	ESENTE	SPAZIALE 02228	S1 - S1 DREAM - S2 - S40 - S5 - S5 COMPACT - S8 - S9
4	**1186834**	ø 7x2 mm	PTFE	FIAMMA 5.0.002.0113	MARINA
4	**1186834**	ø 7x2 mm	PTFE	FIORENZATO A1200037	BRICOLETTA - COLOMBINA
4	**1186834**	ø 7x2 mm	PTFE	VIBIEMME GUARSILRUDOMO	DOMOBAR
4	**1786296**	ø 9.5x5 mm	PTFE	VIBIEMME GUARSILRUDOST	DOMOBARJUNIOR - DOMOBARSUPER
5	**1786284**	ø 10x5 mm	SILICON	VIBIEMME GUARSILRUDOSU	DOMOBARJUNIOR - DOMOBARSUPER

GUARNIZIONI CIECHE
BLIND GASKETS
BLINDDICHTUNGEN
JUNTAS CIEGAS

1

2

3

4

5

Photo	LF Code	Dimensions	Material	Suitable for	For machine model
1	**1186442**	ø 12x5.8 mm	SILICON	BFC 0540085	CLASSICA - DELUX - GALILEO - GRANDOGE - IMOLA - JUNIOR - LA VITTORIA
1	**1186442**	ø 12x5.8 mm	SILICON	BIANCHI 43057116	SOFIA
1	**1186442**	ø 12x5.8 mm	SILICON	CARIMALI 95.05031	ETABETA - PRATICA
1	**1186442**	ø 12x5.8 mm	SILICON	EXPOBAR 30370060	ELEN - G10 - MARKUS - MEGACREM - MONROC - NEW ELEGANCE - OFFICE
1	**1186442**	ø 12x5.8 mm	SILICON	FIAMMA RST 5.0.016.0301	ATLANTIC - PRESTIGE
1	**1186442**	ø 12x5.8 mm	SILICON	FUTURA 200154	F100
1	**1186442**	ø 12x5.8 mm	SILICON	FUTURMAT 11181302	CUSTOM - F3 - PALANCA - RIMINI
1	**1186442**	ø 12x5.8 mm	SILICON	GAGGIA SPAGNA 11181302	BELLA - G6 - KB - NERA - PALANCA
1	**1186442**	ø 12x5.8 mm	SILICON	ITALCREM 11181302	IT4 - PALANCA
1	**1186442**	ø 12x5.8 mm	SILICON	MAIRALI 11181302	ARIANNE - PALANCA
1	**1186442**	ø 12x5.8 mm	SILICON	MARZOCCO L165/5	FB70 - LINEA
1	**1186442**	ø 12x5.8 mm	SILICON	PAVONI 362074	BAR - BART - CAFE - PUB
1	**1186442**	ø 12x5.8 mm	SILICON	RENEKA 9007703	PLUS - PRESTIGE - VIVAE - VIVAS
1	**1186442**	ø 12x5.8 mm	SILICON	ROYAL 0540085	DIADEMA - DOGARESSA - SYNCHRO - TECNICA - VALLELUNGA
1	**1186442**	ø 12x5.8 mm	SILICON	SANREMO 10505558	AMALFI - CAPRI - MILANO LX - PISA - TORINO - VENEZIA - VERONA - ZOE
1	**1186442**	ø 12x5.8 mm	SILICON	SCALA C-0180	BUTTERFLY - EROICA - IRIS - NORMA
1	**1186442**	ø 12x5.8 mm	SILICON	VIBIEMME GUARSILRUBEVO	EVOLUTION - KOMETA - MINIMAX - REVOLUTION - SILVER
1	**1186442**	ø 12x5.8 mm	SILICON	VISACREM 11181302	BRAVA - PALANCA - V6
2	**1186744**	ø 12x5.8 mm	EPDM	FAEMA	COMPACT - EXPRESS - SPECIAL
3	**1786308**	ø 9x6.5 mm	SILICON	ECM MANUFACTURE P6000.2	CLASSIKA II - MECHANIKA
3	**1786318**	ø 9x6 mm	EPDM	LAVAZZA 10081629	EP4100M - LB4100 - LB4103
4	**1786259**	ø 12x4 mm	SILICON	NUOVA SIMONELLI 02590012	AURELIA - AURELIA II - BEACH - MACDIGIT - PROGRAM
4	**1786294**	ø 10x5 mm	SILICON	VIBIEMME GUARSILRUDOSR	DOMOBARJUNIOR - DOMOBARSUPER
5	**1186154**	ø 8x4 mm	EPDM	BEZZERA 5493001	B2000 - B2006 - B2013 - B3000 - B4000 - B6000 - B6000 NEW - BZ02
5	**1186108**	ø 12x5 mm	EPDM	BEZZERA 5493011	B2000 - B2000 AL - B2006 - B2006 AL - B3000 - B4000 - GALATEA
5	**1186100**	ø 23x3 mm	EPDM	BEZZERA	---
5	**1186412**	ø 11x4 mm	EPDM	BRASILIA 01365.0.00.02	CENTURY - CLASSICA - DECURTIS - GRADISCA - PORTOFINO
5	**1186217**	ø 8x3 mm	EPDM	CARIMALI 87.00024	ECO - SYSTEMA - UNO
5	**1186363**	ø 9x5 mm	EPDM	CIMBALI 400-244-000	JUNIOR - M20 - M27 - M28 - M30
5	**1186363**	ø 9x5 mm	EPDM	FAEMA 400244000	E61 - E98 COMPACT - EMBLEMA
5	**1186235**	ø 14x4 mm	EPDM	CONTI 181100	CLASSICA PMS - HYDROMATIC - PISTOMATIC
5	**1186363**	ø 9x5 mm	EPDM	FAEMA 400244000	E61 - E98 COMPACT - EMBLEMA
5	**1186412**	ø 11x4 mm	EPDM	FIAMMA 5.0.000.0335	---
5	**1186747**	ø 12x4 mm	EPDM	FUTURMAT	---
5	**1186175**	ø 13x4 mm	EPDM	PROMAC 36301105	COMPACT - GREEN
5	**1186175**	ø 13x4 mm	EPDM	RANCILIO 36301105	CLASSE10 - CLASSE6 - CLASSE7 - CLASSE8 - CLASSE9 - EPOCA
5	**1186175**	ø 13x4 mm	EPDM	RENEKA 2500062	CONCEPT - PLUS - TEMPO - VIVA - XL
5	**1186145**	ø 13x3 mm	EPDM	SAN MARCO 109069	100 - 105 - 105 NEW - 85 - 85 TOP - 95 - LEVA

GUARNIZIONI PER RESISTENZE
HEATING ELEMENT GASKETS
DICHTUNGEN FÜR HEIZKÖRPER
JUNTAS PARA RESISTENCIAS

1 - OR

2 - PTFE

3 - CARBO

4 - PAPER

Photo	LF Code	Dimensions	Material	For heating elements
1	**3060608**	OR 03050	EPDM	1/4"
1	**3186175**	ø 51x41x3.5 mm	EPDM	1"1/4
2	**1186623**	ø 53x43x3 mm	PTFE	1"1/4
3	**1186633**	ø 53x42x3 mm	CARBO	1"1/4
4	**3186010**	ø 54x42x2 mm	ESENTE	1"1/4
2	**1186993**	ø 42x33x3 mm	PTFE	1"
3	**1186627**	ø 41x33x3 mm	CARBO	1"
2	**1186179**	ø 57x43x3 mm	PTFE	TYPE FAEMA - TIPO FAEMA
3	**1186606**	ø 57x43x3 mm	CARBO	TYPE FAEMA - TIPO FAEMA
2	**1186608**	ø 50x40x2 mm	PTFE	ASTORIA/CMA - GAGGIA - SAN MARCO
3	**1786215**	ø 50x40x2 mm	CARBO	ASTORIA/CMA - GAGGIA - SAN MARCO
4	**1186156**	ø 50x40x2 mm	ESENTE	ASTORIA/CMA - GAGGIA - SAN MARCO
1	**1186152**	OR 03287	EPDM	BEZZERA BZ02 - BZ07 - BZ10 - BZ99
1	**3186013**	OR 06187	EPDM	CASADIO VENTI
3	**1186607**	ø 57.8x50x3 mm	CARBO	CASADIO - CIMBALI
2	**1186609**	ø 58x51x2 mm	PTFE	CIMBALI - CASADIO
2	**1186155**	ø 76x68.4x3 mm	PTFE	CONTI
2	**1186979**	ø 52x40x2 mm	PTFE	EXPOBAR - MARZOCCO - QUICK MILL
1	**1186641**	OR 0176	EPDM	GAGGIA G105 - G106 - PAVONI EUROPICCOLA
1	**1186798**	OR 0146	VITON	GAGGIA GE ONE - GD ONE
2	**1186409**	ø 68x55x3 mm	PTFE	NUOVA SIMONELLI - VICTORIA ARDUINO
3	**1186638**	ø 67x55x3 mm	CARBO	NUOVA SIMONELLI - VICTORIA ARDUINO
2	**1186455**	ø 65x47x1.5 mm	PTFE	RANCILIO - RANCILIO
3	**3186011**	ø 63x48x2 mm	CARBO	RANCILIO - RANCILIO
1	**3186290**	OR 04187	EPDM	RENEKA
3	**1186637**	ø 56x47x3 mm	CARBO	SAN MARCO
2	**1186516**	ø 26x17x2 mm	PTFE	SPAZIALE S1
1	**1186705**	OR 03168	VITON	SPAZIALE S1
2	**1186639**	ø 62x51x2 mm	PTFE	SPAZIALE
1	**1186715**	OR 0159	VITON	SPAZIALE
4	**1186636**	ø 62x51x2 mm	ESENTE	SPAZIALE
1	**1186241**	OR 04262	VITON	UNIC

GUARNIZIONI PER RESISTENZE
HEATING ELEMENT GASKETS
DICHTUNGEN FÜR HEIZKÖRPER
JUNTAS PARA RESISTENCIAS

1 - CARBO

2 - PRFE

3 - PAPER

4 - CARBO

5 - PAPER

6 - PAPER

Photo	LF Code	Dimensions	Suitable for	Notes
1	**1786047**	85x85x2 mm - ø 55 mm	SPAZIALE	---
2	**1786046**	85x85x2 mm - ø 55 mm	SPAZIALE	---
3	**3186006**	ø 95x56x3 mm	CIMBALI	---
4	**1186628**	ø 76x40x2 mm	BEZZERA	---
5	**1786228**	ø 61x40x2 mm	GAGGIA	---
6	**1186191**	66x66x2 mm - ø 30 mm	GAGGIA	FOR HEATING ELEMENTS TELL - PER RESISTENZE TELL

GUARNIZIONI PER RESISTENZE
HEATING ELEMENT GASKETS
DICHTUNGEN FÜR HEIZKÖRPER
JUNTAS PARA RESISTENCIAS

1 - PAPER

2 - CARBO

3 - PTFE

4 - PAPER

5 - CARBO

6 - PTFE

Photo	LF Code	Dimensions	Suitable for	Notes
1	**1186538**	80x80x2 mm - ø 40 mm	BRASILIA - BRUGNETTI - ECM - EXPOBAR - LAVAZZA - SCALA - VIBIEMME	---
2	**1186621**	80x80x2 mm - ø 40 mm	BRASILIA - BRUGNETTI - ECM - EXPOBAR - LAVAZZA - SCALA - VIBIEMME	---
3	**1186634**	80x80x2 mm - ø 40 mm	BRASILIA - BRUGNETTI - ECM - EXPOBAR - LAVAZZA - SCALA - VIBIEMME	---
4	**1186584**	70x70x2 mm - ø 40 mm	AZKOYEN - GAGGIA - MARCFI-ANCAS - PAVONI - SAECO	---
5	**1186635**	70x70x2 mm - ø 40 mm	AZKOYEN - GAGGIA - MARCFI-ANCAS - PAVONI - SAECO	---
6	**1786006**	70x70x2 mm - ø 40 mm	AZKOYEN - GAGGIA - MARCFI-ANCAS - PAVONI - SAECO	---

GUARNIZIONI PIANE CARBO
CARBO FLAT GASKETS
FLACHDICHTUNGEN CARBO
JUNTAS LLANAS CARBO

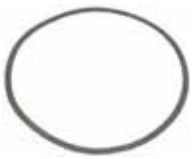

LF Code	Dimensions	Suitable for	Notes
1186517	ø 31x21x3 mm	---	---
1186547	ø 32x24x1.5 mm	NUOVA SIMONELLI	FOR BREW GROUPS - PER GRUPPI EROGAZIONE
1186627	ø 41x33x3 mm	---	FOR HEATING ELEMENTS ø 1" - PER RESISTENZE ø 1"
1786215	ø 50x40x2 mm	ASTORIA/CMA	FOR HEATING ELEMENTS BOOSTED - PER RESISTENZE BOOSTED
1186633	ø 53x42x3 mm	---	FOR HEATING ELEMENTS ø 1"1/4 - PER RESISTENZE ø 1"1/4
1186942	ø 55x42x2 mm	ELEKTRA	FOR HEATING ELEMENTS - PER RESISTENZE

LF Code	Dimensions	Suitable for	Notes
1186637	ø 56x47x3 mm	SAN MARCO	FOR HEATING ELEMENTS - PER RESISTENZE
1186606	ø 57x43x3 mm	---	FOR HEATING ELEMENTS MOD FAEMA - PER RESISTENZE MOD FAEMA
1186607	ø 57.8x50x3 mm	CIMBALI	FOR HEATING ELEMENTS - PER RESISTENZE
3186011	ø 63x48x2 mm	RANCILIO	FOR HEATING ELEMENTS - PER RESISTENZE
1186638	ø 67x55x3 mm	NUOVA SIMONELLI	FOR HEATING ELEMENTS - PER RESISTENZE
1186548	ø 73x61.5x1.5 mm	NUOVA SIMONELLI	FOR BREW GROUPS - PER GRUPPI EROGAZIONE
1186320	ø 87x81x0.5 mm	MARZOCCO	FOR BREW GROUPS - PER GRUPPI EROGAZIONE

GUARNIZIONI PIANE EPDM
EPDM FLAT GASKETS
FLACHDICHTUNGEN EPDM
JUNTAS LLANAS EPDM

LF Code	Dimensions	Suitable for	Notes
1186427	ø 10x4x2 mm	RANCILIO	FOR BREW GROUPS - PER GRUPPI EROGAZIONE
1186758	ø 10x4.5x4 mm	MARCFI-ANCAS	FOR INLET TAPS - PER RUBINETTI CARICO
1186454	ø 11x3.6x2 mm	PROMAC - RANCILIO	FOR INLET TAPS - PER RUBINETTI CARICO
1186423	ø 11x4x4 mm	BRASILIA	FOR INLET TAPS - PER RUBINETTI CARICO
1186703	ø 11x7x7 mm	CIMBALI	FOR BREW GROUPS M15 - PER GRUPPI EROGAZIONE M15
1786321	ø 11x8x1,4 mm	SAECO	FOR BREW GROUPS - PER GRUPPI EROGAZIONE
1186083	ø 12x3x4 mm	RENEKA	FOR STEAM/WATER TAPS - PER RUBINETTI VAPORE/ACQUA
1186342	ø 12x3,5x4 mm	CIMBALI - FAEMA	FOR STEAM/WATER TAPS - PER RUBINETTI VAPORE/ACQUA
1786263	ø 12.5x8x9 mm	ASTORIA/CMA - WEGA	FOR STEAM/WATER TAPS - PER RUBINETTI VAPORE/ACQUA
1186588	ø 13x3x4 mm	AZKOYEN	FOR STEAM/WATER TAPS - PER RUBINETTI VAPORE/ACQUA
1186161	ø 13x4x4 mm	BRASILIA - CONTI - RENEKA	FOR STEAM/WATER TAPS - PER RUBINETTI VAPORE/ACQUA
1186935	ø 13x4x4 mm	ELEKTRA	FOR STEAM/WATER TAPS - PER RUBINETTI VAPORE/ACQUA
1186935	ø 13x4x4 mm	GRIMAC	FOR BREW GROUPS - PER GRUPPI EROGAZIONE
1186111	ø 14x4x4 mm	BEZZERA	FOR STEAM/WATER TAPS - PER RUBINETTI VAPORE/ACQUA
1186111	ø 14x4x4 mm	SAN MARCO	FOR BREW GROUPS - PER GRUPPI EROGAZIONE
1186302	ø 14x4x5 mm	CARIMALI	FOR STEAM/WATER TAPS - PER RUBINETTI VAPORE/ACQUA
1186316	ø 15x4x4 mm 60SH	ASTORIA/CMA - WEGA	FOR STEAM/WATER TAPS - PER RUBINETTI VAPORE/ACQUA
1186527	ø 15x4x4 mm 80SH	ASTORIA/CMA - WEGA	FOR STEAM/WATER TAPS - PER RUBINETTI VAPORE/ACQUA
1486033	ø 15x4x4 mm 60SH	ASTORIA/CMA - WEGA - ORIGINAL	FOR STEAM/WATER TAPS - PER RUBINETTI VAPORE/ACQUA
1186515	ø 15x5.5x3.5 mm	SPAZIALE	FOR STEAM/WATER TAPS - PER RUBINETTI VAPORE/ACQUA
1186369	ø 15x5.5x4 mm	FUTURMAT	FOR BREW GROUPS - PER GRUPPI EROGAZIONE
1186369	ø 15x5.5x4 mm	SAN MARCO	FOR STEAM/WATER TAPS - PER RUBINETTI VAPORE/ACQUA
1186985	ø 15x6x6 mm	GAGGIA	FOR STEAM/WATER TAPS - PER RUBINETTI VAPORE/ACQUA
1186985	ø 15x6x6 mm	PAVONI	FOR STEAM/WATER TAPS - PER RUBINETTI VAPORE/ACQUA
1186300	ø 15x7.3x4 mm	CIMBALI	FOR STEAM/WATER TAPS - PER RUBINETTI VAPORE/ACQUA
1186300	ø 15x7.3x4 mm	GRIMAC	FOR STEAM/WATER TAPS - PER RUBINETTI VAPORE/ACQUA
1186057	ø 15.3x7.7x4 mm	BRASILIA	FOR STEAM/WATER TAPS - PER RUBINETTI VAPORE/ACQUA
1186312	ø 15.5x7.5x4 mm	MANY BRANDS - MOLTI MARCHI	SEVERAL APPLICATIONS - MOLTE APPLICAZIONI
1186233	ø 16x4x5 mm	UNIC	FOR STEAM/WATER TAPS - PER RUBINETTI VAPORE/ACQUA
1186282	ø 16.5x6x4 mm	SAN MARCO	FOR BREW GROUPS - PER GRUPPI EROGAZIONE
1186170	ø 18x4x4 mm	CARIMALI	FOR STEAM/WATER TAPS - PER RUBINETTI VAPORE/ACQUA
3449039	ø 18x11x2 mm	---	FOR INLET HOSES ø 1/2" - PER TUBI CARICO ø 1/2"
1186102	ø 19x3.5x4 mm	BEZZERA	FOR STEAM/WATER TAPS - PER RUBINETTI VAPORE/ACQUA
1186958	ø 20.5x15x2 mm	CIMBALI	FOR STEAM/WATER TAPS - PER RUBINETTI VAPORE/ACQUA
1186066	ø 21x15x3 mm	BRASILIA	FOR STEAM/WATER TAPS - PER RUBINETTI VAPORE/ACQUA
1186410	ø 21x16x2 mm	RANCILIO	FOR BREW GROUPS - PER GRUPPI EROGAZIONE
1186410	ø 21x16x2 mm	RENEKA	FOR STEAM/WATER TAPS - PER RUBINETTI VAPORE/ACQUA
1786222	ø 22x18x1.5 mm	CIMBALI	FOR BOOSTER PUMPS - PER POMPE VOLUMETRICHE
3449026	ø 24x12x2 mm	---	FOR INLET HOSES ø 3/4" - PER TUBI CARICO ø 3/4"
1786231	ø 24x15x3 mm	GAGGIA	FOR INLET TAPS - PER RUBINETTI CARICO
1786231	ø 24x15x3 mm	PAVONI	FOR STEAM/WATER TAPS - PER RUBINETTI VAPORE/ACQUA
1786315	ø 51.3x43x5 mm	ISOMAC	FOR BREW GROUPS - PER GRUPPI EROGAZIONE

GUARNIZIONI PIANE ESENTE
ASBESTOS FREE FLAT GASKETS
FLACHDICHTUNGEN ASBESTFREI
JUNTAS LLANAS SIN AMIANTO

LF Code	Dimensions	Notes
1186042	ø 9x5x1 mm	---
3186341	ø 9x6x1 mm	---
3786349	ø 14x9x2 mm	---
1186041	ø 14.5x10x2 mm	---
1186148	ø 15x7x2 mm	---
3186172	ø 15x9x2 mm	---
1186112	ø 15x10x1 mm	---
1186437	ø 16x12x2 mm	---
1186039	ø 17x13x2 mm	---
1186784	ø 17.5x13x2 mm	---
3786543	ø 18x12x1 mm	---
3786562	ø 18x12x2 mm	---
3786350	ø 18x12x2 mm	---
3186237	ø 19x11x2 mm	---
1186394	ø 22x17x2 mm	---
1186149	ø 22x18x2 mm	---
1186368	ø 23.5x20x1 mm	---
3786348	ø 24x16x2 mm	---
3186575	ø 25x12x2 mm	---
1186340	ø 26x20x2 mm	---
1186183	ø 29x16.5x2 mm	---
1186136	ø 29x22x2 mm	---
3186138	ø 30x21x2 mm	---
5006702	ø 30x22.5x2 mm	FOR HEATING ELEMENTS ø 22 mm - PER RESISTENZE ø 22 mm
1186124	ø 30x24x2 mm	---
3186005	ø 32x26x3 mm	---
1186141	ø 34x26.5x2 mm	---
1186757	ø 36x30x2 mm	---
3186009	ø 45x33x2 mm	---
1186125	ø 50x38x4 mm	---
1186156	ø 50x40x2 mm	FOR HEATING ELEMENTS BOOSTED - PER RESISTENZE BOOSTED
1786227	ø 54x40x1.5 mm	---
3186010	ø 54x42x2 mm	FOR HEATING ELEMENTS ø 1"1/4 - PER RESISTENZE ø 1"1/4
3786374	ø 57x45x1.5 mm	---
3186242	ø 61x46x2 mm	---
1186636	ø 62x51x2 mm	FOR HEATING ELEMENTS - PER RESISTENZE
3186012	ø 80x60x2 mm	---
3786471	ø 90x77x2 mm	---

GUARNIZIONI PIANE NBR
NBR FLAT GASKETS
FLACHDICHTUNGEN NBR
JUNTAS LLANAS NBR

1

2

Photo	LF Code	Dimensions	Suitable for	Notes
1	**1186474**	ø 12x7x5 mm	GAGGIA	FOR STEAM/WATER TAPS - PER RUBINETTI VAPORE/ACQUA
1	**1186474**	ø 12x7x5 mm	PAVONI	FOR STEAM/WATER TAPS - PER RUBINETTI VAPORE/ACQUA
2	**1186311**	ø 13x4x4 mm	MANY BRANDS - MOLTI MARCHI	SEVERAL APPLICATIONS - MOLTE APPLICAZIONI

GUARNIZIONI PIANE PTFE
PTFE FLAT GASKETS
FLACHDICHTUNGEN PTFE
JUNTAS LLANAS PTFE

LF Code	Dimensions	Suitable for	Notes
5500622	ø 6x1.8x2 mm	SAECO	FOR STEAM/WATER TAPS - PER RUBINETTI VAPORE/ACQUA
1186718	ø 7x5x1 mm	SPAZIALE	FOR HIDRAULIC SYSTEM - PER IMPIANTO IDRAULICO
1186974	ø 8.5x4.5x1.5 mm	CIMBALI - CASADIO	FOR MANOMETER - PER MANOMETRO
1786291	ø 9.5x6x2 mm	VIBIEMME	FOR BREW GROUPS - PER GRUPPI EROGAZIONE
1186099	ø 10x6x1 mm	BEZZERA - BIANCHI - BRASILIA	FOR BREW GROUPS - PER GRUPPI EROGAZIONE
1186099	ø 10x6x1 mm	PAVONI - RENEKA	FOR BREW GROUPS - PER GRUPPI EROGAZIONE
1186434	ø 10x7x0.5 mm	FAEMA	FOR BREW GROUPS - PER GRUPPI EROGAZIONE
1186359	ø 11.4x8x3 mm	CIMBALI	FOR INLET TAPS - PER RUBINETTI CARICO
1186809	ø 12x9x1 mm	FIAMMA - RANCILIO	FOR BREW GROUPS - PER GRUPPI EROGAZIONE
1186121	ø 12x10x0.5 mm	FAEMA	FOR STEAM/WATER TAPS - PER RUBINETTI VAPORE/ACQUA
1186065	ø 12x10x1 mm	BRASILIA - FIORENZATO - VIBIEMME	FOR STEAM/WATER TAPS - PER RUBINETTI VAPORE/ACQUA
1186908	ø 12x10x2 mm	SAECO	---
1186581	ø 13x3x4 mm	AZKOYEN	---
1786333	ø 13x8.3x1 mm	MARZOCCO F.1.033	FOR STEAM/WATER TAPS - PER RUBINETTI VAPORE/ACQUA
1186661	ø 13x15.5x1 mm	BRASILIA	FOR STEAM/WATER TAPS - PER RUBINETTI VAPORE/ACQUA
1186945	ø 14x10x1.5 mm	CIMBALI	FOR BOOSTER PUMPS - PER POMPE VOLUMETRICHE
1186794	ø 14.6x12x3 mm	PROMAC	FOR STEAM/WATER TAPS - PER RUBINETTI VAPORE/ACQUA
1186189	ø 15x11x2 mm	ASTORIA/CMA	FOR BREW GROUPS - PER GRUPPI EROGAZIONE
3186273	ø 16.5x12.5x1.5 mm	---	---
1186240	ø 17x12x0.5 mm	FAEMA	FOR BREW GROUPS - PER GRUPPI EROGAZIONE
1186468	ø 17x12x1.5 mm	PAVONI - GAGGIA	---
1186982	ø 17x13x2 mm	GRIMAC	FOR BOILER SAFETY VALVES - PER VALVOLA BOILER
1186982	ø 17x13x2 mm	PAVONI	FOR BREW GROUPS - PER GRUPPI EROGAZIONE
1186982	ø 17x13x2 mm	VIBIEMME	FOR LEVEL CAPS - PER TAPPO LIVELLO
1186079	ø 17x13x3 mm	BRASILIA	FOR BREW GROUPS - PER GRUPPI EROGAZIONE
1186119	ø 17.3x12x2 mm	CONTI	FOR BREW GROUPS - PER GRUPPI EROGAZIONE
1186030	ø 18x3.5x1 mm	EXPOBAR	FOR BREW GROUPS - PER GRUPPI EROGAZIONE
1186443	ø 18x9x0.5 mm	RANCILIO - PROMAC	FOR STEAM/WATER TAPS - PER RUBINETTI VAPORE/ACQUA
1186404	ø 18x13x2 mm	MANY BRANDS - MOLTI MARCHI	SEVERAL APPLICATIONS - MOLTE APPLICAZIONI
1786301	ø 18x13.5x2 mm	FIAMMA	---
1786166	ø 18x14x1.5 mm	CIMBALI - CASADIO	FOR BOILER SAFETY VALVES - PER VALVOLA BOILER
1786040	ø 18.2x13x2.5 mm	EXPOBAR	---
1786251	ø 19x14.5x2 mm	CARIMALI	FOR BREW GROUPS - PER GRUPPI EROGAZIONE

LF Code	Dimensions	Suitable for	Notes
1786001	ø 20x13x3 mm	---	---
1186959	ø 20x15x1 mm	CIMBALI - FAEMA	---
1186594	ø 20x17x2 mm	BRASILIA	FOR INLET TAPS - PER RUBINETTI CARICO
1186594	ø 20x17x2 mm	ORCHESTRALE	FOR STEAM/WATER TAPS - PER RUBINETTI VAPORE/ACQUA
1186594	ø 20x17x2 mm	SANREMO	FOR BREW GROUPS - PER GRUPPI EROGAZIONE
1186201	ø 21x16.8x2 mm	MANY BRANDS - MOLTI MARCHI	SEVERAL APPLICATIONS - MOLTE APPLICAZIONI
3786036	ø 22x9x1 mm	---	---
1186326	ø 22x16x2 mm	MANY BRANDS - MOLTI MARCHI	SEVERAL APPLICATIONS - MOLTE APPLICAZIONI
1786336	ø 22x16.5x5 mm	VICTORIA ARDUINO	FOR STEAM/WATER TAPS - PER RUBINETTI VAPORE/ACQUA
1186957	ø 22x17x1.5 mm	CIMBALI - CASADIO	FOR STEAM/WATER TAPS - PER RUBINETTI VAPORE/ACQUA
1186314	ø 22x17x2 mm	MANY BRANDS - MOLTI MARCHI	SEVERAL APPLICATIONS - MOLTE APPLICAZIONI
3186609	ø 24x13x1.5 mm	---	---
1186323	ø 24x18x2 mm	MANY BRANDS - MOLTI MARCHI	SEVERAL APPLICATIONS - MOLTE APPLICAZIONI
1186731	ø 24x19x2 mm	FIORENZATO - MARZOCCO - VIBIEMME	FOR STEAM/WATER TAPS - PER RUBINETTI VAPORE/ACQUA
1786250	ø 24x20x1.5 mm	CARIMALI	FOR BREW GROUPS - PER GRUPPI EROGAZIONE
3186278	ø 25x16.5x0.5 mm	---	---
1186969	ø 25x21x1.5 mm	CIMBALI - CASADIO	FOR FILTER - PER FILTRO
1786283	ø 25.5x21x5 mm	VIBIEMME	FOR BREW GROUPS - PER GRUPPI EROGAZIONE
3786502	ø 25.7x21.2x5 mm	EXPOBAR	---
1186516	ø 26x17x2 mm	SPAZIALE	FOR HEATING ELEMENTS - PER RESISTENZE
1186118	ø 26x19x2 mm	FIORENZATO	FOR STEAM/WATER TAPS - PER RUBINETTI VAPORE/ACQUA
1186117	ø 26x21x2 mm	MANY BRANDS - MOLTI MARCHI	SEVERAL APPLICATIONS - MOLTE APPLICAZIONI
1186537	ø 26x22x2 mm	EXPOBAR	FOR BREW GROUPS - PER GRUPPI EROGAZIONE
1186537	ø 26x22x2 mm	PAVONI	FOR BREW GROUPS - PER GRUPPI EROGAZIONE
1186127	ø 27x20x0.5 mm	FAEMA	FOR INLET TAPS - PER RUBINETTI CARICO
1186248	ø 27x20x1 mm	CASADIO	FOR BREW GROUPS - PER GRUPPI EROGAZIONE
1186248	ø 27x20x1 mm	FAEMA	FOR STEAM/WATER TAPS - PER RUBINETTI VAPORE/ACQUA
1186290	ø 27x21x2 mm	SAN MARCO	FOR BREW GROUPS - PER GRUPPI EROGAZIONE
1186281	ø 28x23x2 mm	PAVONI	FOR STEAM/WATER TAPS - PER RUBINETTI VAPORE/ACQUA
1186281	ø 28x23x2 mm	SAN MARCO	FOR BREW GROUPS - PER GRUPPI EROGAZIONE
1186770	ø 33x28x4 mm	ASTORIA/CMA	FOR BREW GROUPS - PER GRUPPI EROGAZIONE
1186361	ø 34x27x2 mm	SAN MARCO	FOR BREW GROUPS - PER GRUPPI EROGAZIONE
3186665	ø 35x21x2 mm	---	---
1186328	ø 35x30x2 mm	MANY BRANDS - MOLTI MARCHI	SEVERAL APPLICATIONS - MOLTE APPLICAZIONI
1186307	ø 36x30x2 mm	MANY BRANDS - MOLTI MARCHI	SEVERAL APPLICATIONS - MOLTE APPLICAZIONI
3786512	ø 40x34x3 mm	CONTI	---
1186993	ø 42x33x3 mm	BEZZERA	FOR HEATING ELEMENTS - PER RESISTENZE
1186243	ø 42x34x0.5 mm	FAEMA	FOR BREW GROUPS - PER GRUPPI EROGAZIONE
1186608	ø 50x40x2 mm	ASTORIA/CMA - SAN MARCO - SPAZIALE	FOR HEATING ELEMENTS - PER RESISTENZE
1186994	ø 50x40x5.5 mm	SAN MARCO	FOR BREW GROUPS - PER GRUPPI EROGAZIONE
1186800	ø 50x44x4 mm	FIORENZATO - VIBIEMME	FOR BREW GROUPS - PER GRUPPI EROGAZIONE
1186979	ø 52x40x2 mm	EXPOBAR	FOR HEATING ELEMENTS - PER RESISTENZE
1186979	ø 52x40x2 mm	QUICK MILL	FOR HEATING ELEMENTS - PER RESISTENZE
1186623	ø 53x43x3 mm	MANY BRANDS - MOLTI MARCHI	FOR HEATING ELEMENTS - PER RESISTENZE
5037638	ø 56x46x3 mm	SANMARCO	FOR HEATING ELEMENTS - PER RESISTENZE
3743110	ø 57x41x2 mm	---	---
1186179	ø 57x43x3 mm	MANY BRANDS - MOLTI MARCHI	FOR HEATING ELEMENTS - PER RESISTENZE
1186194	ø 58x43x2 mm	ASTORIA/CMA - ORCHESTRALE	FOR HEATING ELEMENTS - PER RESISTENZE
1186609	ø 58x51x2 mm	CIMBALI	FOR HEATING ELEMENTS - PER RESISTENZE
1186639	ø 62x51x2 mm	SPAZIALE	FOR HEATING ELEMENTS - PER RESISTENZE
1186455	ø 65x47x1.5 mm	RANCILIO - PROMAC	FOR HEATING ELEMENTS - PER RESISTENZE
1186409	ø 68x55x3 mm	NUOVA SIMONELLI	FOR HEATING ELEMENTS - PER RESISTENZE
1186188	ø 72x61x2 mm	ASTORIA/CMA	FOR HEAT EXCHANGES - PER SCAMBIATORE
1186297	ø 73x61x3 mm	---	---
1186155	ø 76x68.4x3 mm	CONTI	FOR HEATING ELEMENTS - PER RESISTENZE
1786213	ø 85x70x2 mm	SPAZIALE	FOR BREW GROUPS - PER GRUPPI EROGAZIONE
1786340	87x81x0.5 mm	MARZOCCO	FOR BREW GROUPS - PER GRUPPI EROGAZIONE

GUARNIZIONI PIANE RAME
COPPER FLAT GASKETS
FLACHDICHTUNGEN KUPFER
JUNTAS LLANAS COBRE

LF Code	Dimensions
1186771	ø 8.5x5x1 mm
1186811	ø 10x6x1 mm
1786013	ø 10x6.2x1 mm
1786332	ø 12x6.2x1 mm
1186239	ø 13x6x1 mm
1186268	ø 13x8x1 mm
1186917	ø 13x10x1 mm
1186301	ø 14x10x1 mm
1786293	ø 14x11x1 mm
1348821	ø 15x10x1 mm
1186262	ø 16x12x1.5 mm
1186792	ø 16x12x2 mm
1186114	ø 17x13.1x1 mm
1786258	ø 18x12.5x1.5 mm
1186619	ø 18x14x1.5 mm
1186232	ø 19x13.5x1.5 mm
1186167	ø 21.2x18x1.5 mm
1186620	ø 22x17x1.5 mm
1786289	ø 22x17x2 mm
1186677	ø 22x18x1.5 mm
1186044	ø 24x20x1 mm
1186810	ø 24x21x1 mm
1186333	ø 26x20x2 mm
1186214	ø 26x21.5x1.5 mm
1186823	ø 27x21.5x1 mm
1186105	ø 28x24x1 mm
1186828	ø 30x26x1 mm
1186450	ø 32x26x1 mm

GUARNIZIONI PIANE RAME TONDE
ROUND FLAT GASKETS OF COPPER
DICHTUNGEN FLACH KUPFER RUND
JUNTAS PLANAS DE COBRE REDONDAS

LF Code	Dimensions
1186768	ø 10x6.4x2 mm
1786334	ø 14x10x1.6 mm
1186769	ø 18.7x13x2.5 mm
1186048	ø 19x13x2.7 mm
1186939	ø 21x17x2 mm
1186171	ø 22x16.5x2.2 mm
1186067	ø 23x17x3 mm
1186186	ø 23x17x3 mm
1186140	ø 24x18.4x2.5mm
1186445	ø 26x21.4x2 mm
1186047	ø 28x22x3 mm
1186436	ø 33x26x3 mm

GUARNIZIONI PIANE SILICONE
SILICONE FLAT GASKETS
FLACHDICHTUNGEN SILIKON
JUNTAS LLANAS SILICONA

1

2

Photo	LF Code	Dimensions	Suitable for	Notes
1	**1186487**	ø 12x4.5x4 mm	NUOVA SIMONELLI 02590009	FOR STEAM/WATER TAPS - PER RUBINETTI VAPORE/ACQUA
1	**1186487**	ø 12x4.5x4 mm	VICTORIA ARDUINO 02590009	FOR STEAM/WATER TAPS - PER RUBINETTI VAPORE/ACQUA
2	**1786270**	ø 40x32x5 mm	SPINEL SR.000.039.006	FOR BREW GROUPS - PER GRUPPI EROGAZIONE

GUARNIZIONI PIANE VITON
VITON FLAT GASKETS
FLACHDICHTUNGEN VITON
JUNTAS LLANAS VITON

1

2

3

4

Photo	LF Code	Dimensions	Suitable for	Notes
1	**1186927**	ø 12x3,5x4 mm	CASADIO 400274020	FOR STEAM/WATER TAPS - PER RUBINETTI VAPORE/ACQUA
1	**1186927**	ø 12x3,5x4 mm	CIMBALI 400-274-020	FOR STEAM/WATER TAPS - PER RUBINETTI VAPORE/ACQUA
1	**1186822**	ø 13x4x4 mm	FAEMA	FOR STEAM/WATER TAPS - PER RUBINETTI VAPORE/ACQUA
1	**1186822**	ø 13x4x4 mm	RANCILIO 36302002	FOR BREW GROUPS - PER GRUPPI EROGAZIONE
1	**1186822**	ø 13x4x4 mm	SCALA C-0166	FOR STEAM/WATER TAPS - PER RUBINETTI VAPORE/ACQUA
1	**1186822**	ø 13x4x4 mm	WEGA WY27421026	FOR BREW GROUPS - PER GRUPPI EROGAZIONE
1	**5053833**	ø 13x4x4 mm NSF	FAEMA 402205000	FOR STEAM/WATER TAPS - PER RUBINETTI VAPORE/ACQUA
2	**1186029**	ø 15x5.5x3 mm	EXPOBAR 50030000	FOR BREW GROUPS - PER GRUPPI EROGAZIONE
3	**1186983**	ø 15x7x3 mm	GAGGIA WGA4001092000	FOR INLET TAPS - PER RUBINETTI CARICO
3	**1186983**	ø 15x7x3 mm	LAVAZZA 10061899	FOR INLET TAPS - PER RUBINETTI CARICO
3	**1186983**	ø 15x7x3 mm	PAVONI 362003	FOR STEAM/WATER TAPS - PER RUBINETTI VAPORE/ACQUA
3	**1186983**	ø 15x7x3 mm	SAECO WGA4001092000	FOR INLET TAPS - PER RUBINETTI CARICO
4	**1186938**	ø 20.5x15x2 mm	ELEKTRA 00409035	FOR STEAM/WATER TAPS - PER RUBINETTI VAPORE/ACQUA

GUARNIZIONI SAGOMATE
SHAPED GASKETS
GEFORMTE DICHTUNGEN
JUNTAS PERFILADAS

1

2

3

4

5

6

Photo	LF Code	Dimensions	Suitable for	Notes
1	**5062673**	ø 45x39x4 mm	SAECO 140360500	FOR COFFEE GRINDERS - PER MACINACAFFE'
2	**1186150**	ø 11x8x15 mm	SAN MARCO 109013	FOR INLET TAPS - PER RUBINETTI CARICO
3	**1186135**	---	SAN MARCO 109040	FOR BREW GROUPS - PER GRUPPI EROGAZIONE
4	**1186129**	ø 15/6x10 mm - H 10 mm - NBR	SPAZIALE 00290	FOR STEAM/WATER TAPS - PER RUBINETTI VAPORE/ACQUA
4	**5054835**	ø 15/6x10 mm - H 10 mm - VITON	SPAZIALE 00290	FOR STEAM/WATER TAPS - PER RUBINETTI VAPORE/ACQUA
4	**1186129**	ø 15/6x10 mm - H 10 mm - NBR	VIBIEMME GUARVALESPEVR	FOR STEAM/WATER TAPS - PER RUBINETTI VAPORE/ACQUA
4	**5054835**	ø 15/6x10 mm - H 10 mm - VITON	VIBIEMME GUARVALESPEVR	FOR STEAM/WATER TAPS - PER RUBINETTI VAPORE/ACQUA
5	**1186415**	---	WEGA WY12013	FOR SOLENOID VALVES - PER ELETTROVALVOLA
6	**1186393**	ø 12.5x8x9 mm	WEGA WY12204	FOR STEAM/WATER TAPS - PER RUBINETTI VAPORE/ACQUA

GUARNIZIONI SAGOMATE
SHAPED GASKETS
GEFORMTE DICHTUNGEN
JUNTAS PERFILADAS

1

2

3

4

5

6

Photo	LF Code	Dimensions	Suitable for	Notes
1	**5062673**	ø 45x39x4 mm	GAGGIA 140360500	FOR COFFEE GRINDER - PER MACINACAFFE'
2	**1186129**	ø 15/6x10 mm - H 10 mm - NBR	GRIMAC 1110100051/GR758	FOR STEAM/WATER TAPS - PER RUBINETTI VAPORE/ACQUA
2	**5054835**	ø 15/6x10 mm - H 10 mm - VITON	GRIMAC 1110100051/GR758	FOR STEAM/WATER TAPS - PER RUBINETTI VAPORE/ACQUA
2	**1186129**	ø 15/6x10 mm - H 10 mm - NBR	ROYAL 0510186	FOR STEAM/WATER TAPS - PER RUBINETTI VAPORE/ACQUA
2	**5054835**	ø 15/6x10 mm - H 10 mm - VITON	ROYAL 0510186	FOR STEAM/WATER TAPS - PER RUBINETTI VAPORE/ACQUA
3	**1786221**	---	PARKER	FOR SOLENOID VALVES - PER ELETTROVALVOLE
4	**1186082**	ø 50x36x2 mm	RENEKA 9001720	FOR HEAT EXCHANGES - PER SCAMBIATORE
5	**1186848**	ø 14/12 mm - ø in 7 mm	SAECO 11003671	FOT WATER CONTAINER - PER CONTENITORE ACQUA
6	**5062396**	---	SAECO 145857962	FOR BREW GROUPS - PER GRUPPI EROGAZIONE

GUARNIZIONI SAGOMATE
SHAPED GASKETS
GEFORMTE DICHTUNGEN
JUNTAS PERFILADAS

1

2

3

4

5

6

Photo	LF Code	Dimensions	Suitable for	Notes
1	**1486036**	66x27x12 mm	DELONGHI 5313236431	FOT WATER CONTAINER - PER CONTENITORE ACQUA
2	**5055961**	---	DELONGHI 5332215100	FOR MILK PIPE - PER TUBAZIONE PESCANTE LATTE
3	**1786265**	ø 8,5 mm	DELONGHI 5313217691	FOR BOILER FITTING - PER RACCORDO CALDAIA
4	**1186129**	ø 15/6x10 mm - H 10 mm - NBR	FAEMA	FOR STEAM/WATER TAPS - PER RUBINETTI VAPORE/ACQUA
4	**5054835**	ø 15/6x10 mm - H 10 mm - VITON	FAEMA	FOR STEAM/WATER TAPS - PER RUBINETTI VAPORE/ACQUA
4	**1186129**	ø 15/6x10 mm - H 10 mm - NBR	FIAMMA RST 5.0.016.0223	FOR STEAM/WATER TAPS - PER RUBINETTI VAPORE/ACQUA
4	**5054835**	ø 15/6x10 mm - H 10 mm - VITON	FIAMMA RST 5.0.016.0223	FOR STEAM/WATER TAPS - PER RUBINETTI VAPORE/ACQUA
4	**1186129**	ø 15/6x10 mm - H 10 mm - NBR	FUTURA 200189	FOR STEAM/WATER TAPS - PER RUBINETTI VAPORE/ACQUA
4	**5054835**	ø 15/6x10 mm - H 10 mm - VITON	FUTURA 200189	FOR STEAM/WATER TAPS - PER RUBINETTI VAPORE/ACQUA
4	**1186129**	ø 15/6x10 mm - H 10 mm - NBR	FUTURMAT 01853704	FOR STEAM/WATER TAPS - PER RUBINETTI VAPORE/ACQUA
4	**5054835**	ø 15/6x10 mm - H 10 mm - VITON	FUTURMAT 01853704	FOR STEAM/WATER TAPS - PER RUBINETTI VAPORE/ACQUA
4	**1186129**	ø 15/6x10 mm - H 10 mm - NBR	GAGGIA SPAGNA 01853704	FOR STEAM/WATER TAPS - PER RUBINETTI VAPORE/ACQUA
4	**5054835**	ø 15/6x10 mm - H 10 mm - VITON	GAGGIA SPAGNA 01853704	FOR STEAM/WATER TAPS - PER RUBINETTI VAPORE/ACQUA
5	**5062396**	---	GAGGIA 145857962	FOR BREW GROUPS - PER GRUPPI EROGAZIONE
6	**5500857**	---	GAGGIA 9161.270	FOR COFFEE CONTAINER - PER CONTENITORE CAFFE'

GUARNIZIONI SAGOMATE
SHAPED GASKETS
GEFORMTE DICHTUNGEN
JUNTAS PERFILADAS

1

2

3

4

5

6

Photo	LF Code	Dimensions	Suitable for	Notes
1	**1186415**	---	ASTORIA/CMA 12013	FOR SOLENOID VALVES - PER ELETTROVALVOLA
2	**1186393**	ø 12.5x8x9 mm	ASTORIA/CMA 12204	FOR STEAM/WATER TAPS - PER RUBINETTI VAPORE/ACQUA
3	**1186129**	ø 15/6x10 mm - H 10 mm - NBR	BFC 0510186	FOR STEAM/WATER TAPS - PER RUBINETTI VAPORE/ACQUA
3	**5054835**	ø 15/6x10 mm - H 10 mm - VITON	BFC 0510186	FOR STEAM/WATER TAPS - PER RUBINETTI VAPORE/ACQUA
3	**1186129**	ø 15/6x10 mm - H 10 mm - NBR	BRASILIA 18508.0.00.02	FOR STEAM/WATER TAPS - PER RUBINETTI VAPORE/ACQUA
3	**5054835**	ø 15/6x10 mm - H 10 mm - VITON	BRASILIA 18508.0.00.02	FOR STEAM/WATER TAPS - PER RUBINETTI VAPORE/ACQUA
4	**1186215**	ø 15x10x2.5 mm	CARIMALI 88.00001.00.19	FOR STEAM/WATER TAPS - PER RUBINETTI VAPORE/ACQUA
5	**1486012**	ø 18x8x9 mm	DELONGHI 5313235921	FOT WATER CONTAINER - PER CONTENITORE ACQUA
6	**1486014**	ø 24x17x10 mm	DELONGHI 5332108700	FOT WATER CONTAINER - PER CONTENITORE ACQUA

KIT GUARNIZIONI
GASKETS KIT
KIT DICHTUNGEN
KIT JUNTAS

1

2

Photo	LF Code	Suitable for	For machine model
1	**1786200**	PAVONI	EUROPICCOLA
2	**1786201**	PAVONI	PROFESSIONAL

TENUTE CONICHE ASTORIA/CMA
SEALING CONES ASTORIA/CMA
DICHTKEGEL ASTORIA/CMA
SELLADOS DE CONO ASTORIA/CMA

1

2

Photo	LF Code	Dimensions	Material	Suitable for
1	**1786218**	ø 14.5x11.5x3 mm	PTFE	ASTIRIA/CMA 15191000
2	**1186378**	ø 14x7x6 mm	PTFE	ASTORIA/CMA 15191

TENUTE CONICHE BEZZERA
SEALING CONES BEZZERA
DICHTKEGEL BEZZERA
SELLADOS DE CONO BEZZERA

1

2

Photo	LF Code	Dimensions	Material	Suitable for
1	**1186332**	ø 16.5x6x5.5 mm	PTFE	BEZZERA 5494002
2	**1186109**	ø 12x5x5.5 mm	PTFE	BEZZERA 5494004

TENUTE CONICHE BRASILIA
SEALING CONES BRASILIA
DICHTKEGEL BRASILIA
SELLADOS DE CONO BRASILIA

1

Photo	LF Code	Dimensions	Material	Suitable for
1	**1186602**	ø 14.5x10x5 mm	PTFE	BRASILIA 00810.0.00.02

TENUTE CONICHE CASADIO
SEALING CONES CASADIO
DICHTKEGEL CASADIO
SELLADOS DE CONO CASADIO

1

Photo	LF Code	Dimensions	Material	Suitable for
1	**1186344**	ø 14.5x7x6 mm	PTFE	CASADIO 485078010

TENUTE CONICHE CIMBALI
SEALING CONES CIMBALI
DICHTKEGEL CIMBALI
SELLADOS DE CONO CIMBALI

1

2

Photo	LF Code	Dimensions	Material	Suitable for
1	**1186208**	ø 25 mm	EPDM	CIMBALI 400-363-000
2	**1186344**	ø 14.5x7x6 mm	PTFE	CIMBALI 485-078-010

TENUTE CONICHE CONTI
SEALING CONES CONTI
DICHTKEGEL CONTI
SELLADOS DE CONO CONTI

1

Photo	LF Code	Dimensions	Material	Suitable for
1	**1186177**	ø 13.5x7.5x3.5 mm	PTFE	CONTI 401320

TENUTE CONICHE ECM MANUFACTURE
CONICAL SEALS ECM MANUFACTURE
KEGELDICHTUNGEN ECM MANUFACTURE
ESTANQUEIDADES CONICAS ECM MANUFACTURE

1

Photo	LF Code	Dimensions	Material	Suitable for
1	**1186378**	ø 14x7x6 mm	PTFE	ECM MANUFACTURE P6010

TENUTE CONICHE ELEKTRA
SEALING CONES ELEKTRA
DICHTKEGEL ELEKTRA
SELLADOS DE CONO ELEKTRA

1

2

Photo	LF Code	Dimensions	Material	Suitable for
1	**1186936**	ø 12x5x5 mm	PTFE	ELEKTRA 01178035
2	**1186388**	ø 19x11x3 mm	PTFE	ELEKTRA 02265035

TENUTE CONICHE FAEMA
SEALING CONES FAEMA
DICHTKEGEL FAEMA
SELLADOS DE CONO FAEMA

1

2

3

Photo	LF Code	Dimensions	Material	Suitable for
1	**1186128**	ø 12x4x4 mm	EPDM	FAEMA 4701029322
2	**1186344**	ø 14.5x7x6 mm	PTFE	FAEMA 485078010
3	**1186247**	ø 15x7.5x10.3 mm	PTFE	FAEMA 4161132346

TENUTE CONICHE FUTURMAT
SEALING CONES FUTURMAT
DICHTKEGEL FUTURMAT
SELLADOS DE CONO FUTURMAT

1

2

3

Photo	LF Code	Dimensions	Material	Suitable for
1	**1186128**	ø 12x4x4 mm	EPDM	FUTURMAT 02932200
2	**1186176**	ø 15x8x7 mm	PTFE	FUTURMAT 08165201
3	**1786309**	ø 14.5x7x8 mm	PTFE	FUTURMAT 08397800

TENUTE CONICHE GAGGIA
SEALING CONES GAGGIA
DICHTKEGEL GAGGIA
SELLADOS DE CONO GAGGIA

1

2

Photo	LF Code	Dimensions	Material	Suitable for
1	**1786230**	ø 14.5x6.5x9 mm	PTFE	GAGGIA WGARB0902
2	**1786025**	ø 10x3.5x6 mm	PTFE	GAGGIA 4310023000

TENUTE CONICHE GAGGIA SPAGNA
SEALING CONES GAGGIA SPAGNA
DICHTKEGEL GAGGIA SPAGNA
SELLADOS DE CONO GAGGIA SPAGNA

1

2

3

Photo	LF Code	Dimensions	Material	Suitable for
1	**1786309**	ø 14.5x7x8 mm	PTFE	GAGGIA SPAGNA 08397800
2	**1186176**	ø 15x8x7 mm	PTFE	GAGGIA SPAGNA 08165201
3	**1186128**	ø 12x4x4 mm	EPDM	GAGGIA SPAGNA 02932200

TENUTE CONICHE GRIMAC
SEALING CONES GRIMAC
DICHTKEGEL GRIMAC
SELLADOS DE CONO GRIMAC

1

Photo	LF Code	Dimensions	Material	Suitable for
1	**1186680**	ø 14.5x9x8 mm	PTFE	GRIMAC 1110300003-GR269

TENUTE CONICHE ITALCREM
SEALING CONES ITALCREM
DICHTKEGEL ITALCREM
SELLADOS DE CONO ITALCREM

1

2

3

Photo	LF Code	Dimensions	Material	Suitable for
1	**1786309**	ø 14.5x7x8 mm	PTFE	ITALCREM 08397800
2	**1186176**	ø 15x8x7 mm	PTFE	ITALCREM 08165201
3	**1186128**	ø 12x4x4 mm	EPDM	ITALCREM 02932200

TENUTE CONICHE LAVAZZA
CONICAL SEALS LAVAZZA
KEGELDICHTUNGEN LAVAZZA
ESTANQUEIDADES CONICAS LAVAZZA

1

2

Photo	LF Code	Dimensions	Material	Suitable for
1	**1186378**	ø 14x7x6 mm	PTFE	LAVAZZA 10066307
2	**1786218**	ø 14,5x11,5x3 mm	PTFE	LAVAZZA 10064566

TENUTE CONICHE MAIRALI
SEALING CONES MAIRALI
DICHTKEGEL MAIRALI
SELLADOS DE CONO MAIRALI

1

2

3

Photo	LF Code	Dimensions	Material	Suitable for
1	**1786309**	ø 14.5x7x8 mm	PTFE	MAIRALI 08397800
2	**1186176**	ø 15x8x7 mm	PTFE	MAIRALI 08165201
3	**1186128**	ø 12x4x4 mm	EPDM	MAIRALI 02932200

TENUTE CONICHE MARZOCCO
SEALING CONES MARZOCCO
DICHTKEGEL MARZOCCO
SELLADOS DE CONO MARZOCCO

1

Photo	LF Code	Dimensions	Material	Suitable for
1	**1186247**	ø 15x7.5x10.3 mm	PTFE	MARZOCCO H.2.003

TENUTE CONICHE ORCHESTRALE
SEALING CONES ORCHESTRALE
DICHTKEGEL ORCHESTRALE
SELLADOS DE CONO ORCHESTRALE

1

Photo	LF Code	Dimensions	Material	Suitable for
1	**1186378**	ø 14x7x6 mm	PTFE	ORCHESTRALE D12661

TENUTE CONICHE PROMAC
SEALING CONES PROMAC
DICHTKEGEL PROMAC
SELLADOS DE CONO PROMAC

1

Photo	LF Code	Dimensions	Material	Suitable for
1	**1186793**	ø 12x6.5 mm	PTFE	PROMAC 36930016

TENUTE CONICHE RANCILIO
SEALING CONES RANCILIO
DICHTKEGEL RANCILIO
SELLADOS DE CONO RANCILIO

1

2

Photo	LF Code	Dimensions	Material	Suitable for
1	**1186804**	ø 14x9x6 mm	PTFE	RANCILIO 36130001
2	**1186793**	ø 12x6.5 mm	PTFE	RANCILIO 36930016

TENUTE CONICHE RENEKA
SEALING CONES RENEKA
DICHTKEGEL RENEKA
SELLADOS DE CONO RENEKA

1

Photo	LF Code	Dimensions	Material	Suitable for
1	**1186344**	ø 14.5x7x6 mm	PTFE	RENEKA 9001887

TENUTE CONICHE SAECO
SEALING CONES SAECO
DICHTKEGEL SAECO
SELLADOS DE CONO SAECO

1

Photo	LF Code	Dimensions	Material	Suitable for
1	**1786230**	ø 14.5x6.5x9 mm	PTFE	SAECO WGARB0902

TENUTE CONICHE SAN MARCO
SEALING CONES SAN MARCO
DICHTKEGEL SAN MARCO
SELLADOS DE CONO SAN MARCO

1 2 3 4 5 6

Photo	LF Code	Dimensions	Material	Suitable for
1	**1186785**	ø 16x20 mm	PTFE	SAN MARCO
2	**1186372**	ø 14.5x10.5x4.5 mm	PTFE	SAN MARCO 109091
3	**1186787**	ø 10x4x6 mm	PTFE	SAN MARCO 106151
4	**1186103**	ø 15.5x7x4 mm	PTFE	SAN MARCO 109021
5	**1186370**	ø 12.5x7x5.5 mm	PTFE	SAN MARCO 109049
6	**1186286**	ø 12x8x4 mm	PTFE	SAN MARCO

TENUTE CONICHE SCALA
SEALING CONES SCALA
DICHTKEGEL SCALA
SELLADOS DE CONO SCALA

1

Photo	LF Code	Dimensions	Material	Suitable for
1	**1186378**	ø 14x7x6 mm	PTFE	SCALA C-0274

TENUTE CONICHE VISACREM
SEALING CONES VISACREM
DICHTKEGEL VISACREM
SELLADOS DE CONO VISACREM

1

2

3

Photo	LF Code	Dimensions	Material	Suitable for
1	**1786309**	ø 14.5x7x8 mm	PTFE	VISACREM 08397800
2	**1186176**	ø 15x8x7 mm	PTFE	VISACREM 08165201
3	**1186128**	ø 12x4x4 mm	EPDM	VISACREM 02932200

TENUTE CONICHE WEGA
SEALING CONES WEGA
DICHTKEGEL WEGA
SELLADOS DE CONO WEGA

1

2

Photo	LF Code	Dimensions	Material	Suitable for
1	**1186378**	ø 14x7x6 mm	PTFE	WEGA WY12661
2	**1786218**	ø 14.5x11.5x3 mm	PTFE	WEGA WY15191000

GUARNIZIONI A LABBRO ASTORIA/CMA
LIP GASKETS ASTORIA/CMA
LIPPENDICHTUNGEN ASTORIA/CMA
JUNTAS EN LABIO ASTORIA/CMA

1

2

Photo	LF Code	Dimensions (mm)	Suitable for	For machine model
1	**1186491**	ø 14x7x5	ASTORIA/CMA 12205	ARGENTA - BRAVA - CALYPSO - DIVINA - GLORIA - RAPALLO AL
2	**1186197**	ø 52x40x7	ASTORIA/CMA 12201	RAPALLO AL

GUARNIZIONI A LABBRO BEZZERA
LIP GASKETS BEZZERA
LIPPENDICHTUNGEN BEZZERA
JUNTAS EN LABIO BEZZERA

1

Photo	LF Code	Dimensions (mm)	Suitable for	For machine model
1	**1186197**	ø 52x40x7 mm	BEZZERA 7491001	B2000 AL - B2006 AL - EBBIS AL - ELLISSE AL - STREGA

GUARNIZIONI A LABBRO BFC
LIP SEALS BFC
LIPPENDICHTUNGEN BFC
JUNTAS DE LABIO BFC

1

Photo	LF Code	Dimensions (mm)	Suitable for	For machine model
1	**1186197**	ø 52x40x7	BFC 0530225	CLASSICA LEVA

GUARNIZIONI A LABBRO BRASILIA
LIP GASKETS BRASILIA
LIPPENDICHTUNGEN BRASILIA
JUNTAS EN LABIO BRASILIA

1

Photo	LF Code	Dimensions (mm)	Suitable for	For machine model
1	**1186197**	ø 52x40x7	BRASILIA 00807.0.00.02	DECURTIS - PORTOFINO AL

GUARNIZIONI A LABBRO BRUGNETTI/AURORA
LIP GASKETS BRUGNETTI/AURORA
LIPPENDICHTUNGEN BRUGNETTI/AURORA
JUNTAS EN LABIO BRUGNETTI/AURORA

1

2

3

4

Photo	LF Code	Dimensions (mm)	Suitable for	For machine model
1	**1186091**	ø 15x8x4	BRUGNETTI/AURORA 000497	---
2	**1186095**	ø 15x9x5	BRUGNETTI/AURORA	---
3	**1186816**	ø 50x38x7.5	BRUGNETTI/AURORA	---
4	**1186817**	ø 51x38x7.5	BRUGNETTI/AURORA	---

GUARNIZIONI A LABBRO CIMBALI
LIP GASKETS CIMBALI
LIPPENDICHTUNGEN CIMBALI
JUNTAS EN LABIO CIMBALI

1

2

3

Photo	LF Code	Dimensions (mm)	Suitable for	For machine model
1	**1186209**	ø 22x13x5	CIMBALI 400-359-000	M15 - M25
2	**1186210**	ø 52x39x6	CIMBALI 400-354-000	M15 - M25
3	**5027692**	ø 19.5x10.5	CIMBALI 400-184-000	MICROCIMBALI

GUARNIZIONI A LABBRO CONTI
LIP GASKETS CONTI
LIPPENDICHTUNGEN CONTI
JUNTAS EN LABIO CONTI

1

2

Photo	LF Code	Dimensions (mm)	Suitable for	For machine model
1	**1186166**	ø 14x7x10.5	CONTI 407501	TWIN STAR2 - XEOS2
2	**1186383**	ø 61x47x6.3	CONTI 200510	CLASSICA PM - CLASSICA SA

GUARNIZIONI A LABBRO ELEKTRA
LIP GASKETS ELEKTRA
LIPPENDICHTUNGEN ELEKTRA
JUNTAS EN LABIO ELEKTRA

1

2

Photo	LF Code	Dimensions (mm)	Suitable for	For machine model
1	**1186379**	ø 41x28x6	ELEKTRA 00173035	MICROCASA
2	**1186386**	ø 41x28x6.5	ELEKTRA 00172035	MICROCASA

GUARNIZIONI A LABBRO FIORENZATO CS
LIP GASKETS FIORENZATO CS
LIPPENDICHTUNGEN FIORENZATO CS
JUNTAS EN LABIO FIORENZATO CS

1

Photo	LF Code	Dimensions (mm)	Suitable for	For machine model
1	**1186197**	ø 52x40x7 mm	FIORENZATO A1200186	PIAZZA SAN MARCO

GUARNIZIONI A LABBRO FUTURMAT
LIP GASKETS FUTURMAT
LIPPENDICHTUNGEN FUTURMAT
JUNTAS EN LABIO FUTURMAT

1

2

Photo	LF Code	Dimensions (mm)	Suitable for	For machine model
1	**1186816**	ø 50x38x7.5	FUTURMAT 00419903	PALANCA
2	**1186277**	ø 52x37x7.5	FUTURMAT 00101600	PALANCA

GUARNIZIONI A LABBRO GAGGIA
LIP GASKETS GAGGIA
LIPPENDICHTUNGEN GAGGIA
JUNTAS EN LABIO GAGGIA

1

2

3

Photo	LF Code	Dimensions (mm)	Suitable for	For machine model
1	**1186470**	ø 21x11x4.5	GAGGIA S361006	G105 - G106
2	**1186700**	ø 23x15x6	GAGGIA 145842900	NEW BABY 06
3	**1186467**	ø 44x33x5.5	GAGGIA S361005	G105 - G106

GUARNIZIONI A LABBRO GAGGIA SPAGNA
LIP SEALS GAGGIA SPAGNA
LIPPENDICHTUNGEN GAGGIA SPAGNA
JUNTAS DE LABIO GAGGIA SPAGNA

1

2

Photo	LF Code	Dimensions (mm)	Suitable for	For machine model
1	**1186816**	ø 50x38x7.5	GAGGIA SPAGNA 00419903	PALANCA
2	**1186277**	ø 52x37x7.5	GAGGIA SPAGNA 00101600	PALANCA

GUARNIZIONI A LABBRO GRIMAC
LIP GASKETS GRIMAC
LIPPENDICHTUNGEN GRIMAC
JUNTAS EN LABIO GRIMAC

1

Photo	LF Code	Dimensions (mm)	Suitable for	For machine model
1	**1186491**	ø 14x7x5	GRIMAC 1110100010-AS003	MIA - NEWCIALDAVAPOR - NEWCIALDAVAPORDOUBLE

GUARNIZIONI A LABBRO ITALCREM
LIP SEALS ITALCREM
LIPPENDICHTUNGEN ITALCREM
JUNTAS DE LABIO ITALCREM

1

2

Photo	LF Code	Dimensions (mm)	Suitable for	For machine model
1	**1186816**	ø 50x38x7.5	ITALCREM 00419903	PALANCA
2	**1186277**	ø 52x37x7.5	ITALCREM 00101600	PALANCA

GUARNIZIONI A LABBRO JURA
LIP SEALS JURA
LIPPENDICHTUNGEN JURA
JUNTAS DE LABIO JURA

1

Photo	LF Code	Dimensions (mm)	Suitable for	For machine model
1	**1301002**	ø 23x15x5 mm	JURA 59456	A5 - A9 - C5 - C50 - C55 - C60 - C65 - C70 - C75 - C9 - C90 - E10

GUARNIZIONI A LABBRO LAVAZZA
LIP SEALS LAVAZZA
LIPPENDICHTUNGEN LAVAZZA
JUNTAS LABIO LAVAZZA

1

Photo	LF Code	Dimensions (mm)	Suitable for	For machine model
1	**1301005**	ø 25x15x5 mm	LAVAZZA 10064366	EP850

GUARNIZIONI A LABBRO MAIRALI
LIP SEALS MAIRALI
LIPPENDICHTUNGEN MAIRALI
JUNTAS DE LABIO MAIRALI

1

2

Photo	LF Code	Dimensions (mm)	Suitable for	For machine model
1	**1186816**	ø 50x38x7.5	MAIRALI 00419903	PALANCA
2	**1186277**	ø 52x37x7.5	MAIRALI 00101600	PALANCA

GUARNIZIONI A LABBRO PAVONI
LIP GASKETS PAVONI
LIPPENDICHTUNGEN PAVONI
JUNTAS EN LABIO PAVONI

1

2

3

4

5

6

Photo	LF Code	Dimensions (mm)	Suitable for	For machine model
1	**1786151**	ø 22.2x15.8x4.7	PAVONI 0R13300120	MICROPOD
2	**1186700**	ø 23x15x6 mm	PAVONI 0P145842900	ESPRESSO INN
3	**1186470**	ø 21x11x4.5	PAVONI 361006	EUROPICCOLA - PROFESSIOANL - ROMANTICA - STRADIVARI
4	**1186467**	ø 44x33x5.5	PAVONI 361005	EUROPICCOLA - PROFESSIOANL - ROMANTICA - STRADIVARI
5	**1186197**	ø 52x40x7	PAVONI 361018	BAR - BART - PUB - HOTEL
6	**5035722**	ø 53x42x7.5	PAVONI 362068	BAR - BART - PUB - HOTEL

GUARNIZIONI A LABBRO PROMAC
LIP GASKETS PROMAC
LIPPENDICHTUNGEN PROMAC
JUNTAS EN LABIO PROMAC

1

Photo	LF Code	Dimensions (mm)	Suitable for	For machine model
1	**1348826**	ø 15x9x4.5	PROMAC 36101002	GREEN - COMPACT

GUARNIZIONI A LABBRO RANCILIO
LIP GASKETS RANCILIO
LIPPENDICHTUNGEN RANCILIO
JUNTAS EN LABIO RANCILIO

1

2

Photo	LF Code	Dimensions (mm)	Suitable for	For machine model
1	**1348826**	ø 15x9x4.5	RANCILIO 36101002	CLASSE10 - MILLENNIUM - S20 - Z11
1	**1186460**	ø 19x13x4	RANCILIO 36101003	Z11
1	**1186832**	ø 24x14x5	RANCILIO 36101004	Z11
2	**1186816**	ø 50x38x7.5	RANCILIO 36101005	CLASSE6 AL - CLASSE7 AL - Z11
1	**1186817**	ø 51x38x7.5	RANCILIO 36101006	CLASSE6 AL - CLASSE7 AL - Z11
2	**1186821**	ø 54x40x7.5	RANCILIO 36101007	Z11
1	**1186820**	ø 55x41x7.5	RANCILIO 36101008	Z11
2	**1186831**	ø 104x88x8	RANCILIO 36101012	Z11

GUARNIZIONI A LABBRO RDL
LIP GASKETS RDL
LIPPENDICHTUNGEN RDL
JUNTAS EN LABIO RDL

1

Photo	LF Code	Dimensions (mm)	Suitable for	For machine model
1	**1786151**	ø 22.2x15.8x4.7	RDL 13300120	MINI - MINICAP

GUARNIZIONI A LABBRO RENEKA
LIP GASKETS RENEKA
LIPPENDICHTUNGEN RENEKA
JUNTAS EN LABIO RENEKA

1

Photo	LF Code	Dimensions (mm)	Suitable for	For machine model
1	**1186084**	ø 16x6x5	RENEKA 9003629	CONCEPT - PILOT - PLUS - PRESTIGE - SINGLE - VIVA - XL

GUARNIZIONI A LABBRO ROYAL
LIP SEALS ROYAL
LIPPENDICHTUNGEN ROYAL
JUNTAS DE LABIO ROYAL

1

Photo	LF Code	Dimensions (mm)	Suitable for	For machine model
1	**1186197**	ø 52x40x7	ROYAL 0530225	VALLELUNGA LEVA

GUARNIZIONI A LABBRO SAECO
LIP GASKETS SAECO
LIPPENDICHTUNGEN SAECO
JUNTAS EN LABIO SAECO

1

2

Photo	LF Code	Dimensions (mm)	Suitable for	For machine model
1	**1186840**	ø 29x12x10	SAECO 145841350	BISTRO - FAMILY
2	**1186700**	ø 23x15x6	SAECO 145842900	EXPRELIA - MAGIC - POEMIA - ROYAL NEW - ROYAL PROFESSIONAL

GUARNIZIONI A LABBRO SAN MARCO
LIP GASKETS SAN MARCO
LIPPENDICHTUNGEN SAN MARCO
JUNTAS EN LABIO SAN MARCO

1

Photo	LF Code	Dimensions (mm)	Suitable for	For machine model
1	**1186123**	ø 50x31x10	SAN MARCO 109014	LEVA

GUARNIZIONI A LABBRO SPAZIALE
LIP GASKETS SPAZIALE
LIPPENDICHTUNGEN SPAZIALE
JUNTAS EN LABIO SPAZIALE

1

Photo	LF Code	Dimensions (mm)	Suitable for	For machine model
1	**1186710**	ø 34x20x6.3	SPAZIALE 00485	S1 - S3 - S5 - S40 - SPAZIO - NEW

GUARNIZIONI A LABBRO VIBIEMME
LIP SEALS VIBIEMME
LIPPENDICHTUNGEN VIBIEMME
JUNTAS DE LABIO VIBIEMME

1

Photo	LF Code	Dimensions (mm)	Suitable for	For machine model
1	**1186197**	ø 52x40x7	VIBIEMME GUARORTENPIST	REPLICA

GUARNIZIONI A LABBRO VICTORIA ARDUINO
LIP GASKETS VICTORIA ARDUINO
LIPPENDICHTUNGEN VICTORIA ARDUINO
JUNTAS EN LABIO VICTORIA ARDUINO

1

Photo	LF Code	Dimensions (mm)	Suitable for	For machine model
1	**1186197**	ø 52x40x7	VICTORIA ARDUINO 17000021	ATHENA

GUARNIZIONI A LABBRO VISACREM
LIP SEALS VISACREM
LIPPENDICHTUNGEN VISACREM
JUNTAS DE LABIO VISACREM

1

2

Photo	LF Code	Dimensions (mm)	Suitable for	For machine model
1	**1186816**	ø 50x38x7.5	VISACREM 00419903	PALANCA
2	**1186277**	ø 52x37x7.5	VISACREM 00101600	PALANCA

GUARNIZIONI A LABBRO WEGA
LIP GASKETS WEGA
LIPPENDICHTUNGEN WEGA
JUNTAS EN LABIO WEGA

1

2

Photo	LF Code	Dimensions (mm)	Suitable for	For machine model
1	**1186491**	ø 14x7x5	WEGA WY12205	COLOSSEUM - ESPRESSA - EURO 2000 - FORMULA MILANO - START
2	**1186197**	ø 52x40x7	WEGA WY12201	AL

GUARNIZIONI A LABBRO ZACCONI
LIP SEALS ZACCONI
LIPPENDICHTUNGEN ZACCONI
JUNTAS DE LABIO ZACCONI

1

Photo	LF Code	Dimensions (mm)	Suitable for	For machine model
1	**1301001**	ø 45x29x6.6 mm	ZACCONI 57	ESPRESSO BABY - RIVIERA

Guarnizioni gruppo macchine caffè
Gaskets for coffee group
Dichtungen für Kaffeemaschinengruppe
Juntas grupos máquinas de café

GUARNIZIONI GRUPPO ADATTE A PIU' MARCHI
GASKETS FOR GROUP ADJUSTABLE TO SEVERAL BRANDS
DICHTUNGEN FÜR GRUPPE FÜR MEHRERE HERSTELLER GEEIGNET
JUNTAS PARA GRUPO ADECUADAS PARA MARCAS VARIAS

1

2

3

Photo	LF Code	Features	Suitable for	For machine model
1	**1186502**	79x71x2 mm - CARBO	MANY BRANDS - MOLTI MARCHI	FOR MODEL E61 GROUPS - PER GRUPPI TIPO E61
2	**1186508**	77x73x2 mm - PTFE	MANY BRANDS - MOLTI MARCHI	FOR MODEL E61 GROUPS - PER GRUPPI TIPO E61
3	**1186384**	80x70x2 mm - PAPER	MANY BRANDS - MOLTI MARCHI	FOR MODEL E61 GROUPS - PER GRUPPI TIPO E61

GUARNIZIONI GRUPPO ASTORIA/CMA
GASKETS FOR GROUP ASTORIA/CMA
DICHTUNGEN FÜR GRUPPE ASTORIA/CMA
JUNTAS PARA GRUPO ASTORIA/CMA

1

2

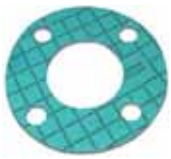
3

Photo	LF Code	Features	Suitable for	For machine model
1	**1186451**	ø 88x40x2 mm - CARBO	ASTORIA/CMA 12002	ARGENTA - BRAVA - DENISE - DORA - GLORIA - GLORIA R12
2	**1187002**	ø 88x40x2 mm - PTFE	ASTORIA/CMA 12002	ARGENTA - BRAVA - DENISE - DORA - GLORIA - GLORIA R12
3	**1786058**	ø 88x40x2 mm - FREE	ASTORIA/CMA 12002	ARGENTA - BRAVA - DENISE - DORA - GLORIA - GLORIA R12

GUARNIZIONI GRUPPO BIANCHI
GASKETS FOR GROUP BIANCHI
DICHTUNGEN FÜR GRUPPE BIANCHI
JUNTAS PARA GRUPO BIANCHI

1

Photo	LF Code	Features	Suitable for	For machine model
1	**1786255**	73x66x2 mm - PAPER	BIANCHI 36362316	SARA

GUARNIZIONI GRUPPO BRASILIA
GASKETS FOR GROUP BRASILIA
DICHTUNGEN FÜR GRUPPE BRASILIA
JUNTAS PARA GRUPO BRASILIA

1

2

Photo	LF Code	Features	Suitable for	For machine model
1	**1186059**	35x32x1.5 mm - FREE	BRASILIA 00823.0.00.02	BELLEEPOQUE JUNIOR - CLUB - LADY
2	**1186652**	77x51x3 mm - CARBO	BRASILIA 00814.0.00.02	CENTURY - CENTURY AMERICA - FIRENZE SL - PORTOFINO

GUARNIZIONI GRUPPO BRUGNETTI-AURORA
GASKETS FOR GROUP BRUGNETTI-AURORA
DICHTUNGEN FÜR GRUPPE BRUGNETTI-AURORA
JUNTAS PARA GRUPO BRUGNETTI-AURORA

1

2

Photo	LF Code	Features	Suitable for	For machine model
1	**1186098**	ø 78x43x2 mm - CARBO	BRUGNETTI-AURORA 000460	ALEXIA - C
2	**1186015**	ø 78x43x2 mm - FREE	BRUGNETTI-AURORA 000460	ALEXIA - C

GUARNIZIONI GRUPPO CIMBALI
GASKETS FOR GROUP CIMBALI
DICHTUNGEN FÜR GRUPPE CIMBALI
JUNTAS PARA GRUPO CIMBALI

1

2

3

4

Photo	LF Code	Features	Suitable for	For machine model
1	**1186501**	ø 94x45x2 mm - CARBO	CIMBALI	M15
2	**1186250**	ø 53x46x6 mm	CIMBALI 401-247-000	M15 - M25
3	**1186207**	ø 128 mm	CIMBALI 460-309-000	M15 - M25
4	**1186704**	---	CIMBALI 460-114-000	M15 - M25

Guarnizioni gruppo macchine caffè
Gaskets for coffee group
Dichtungen für Kaffeemaschinengruppe
Juntas grupos máquinas de café

GUARNIZIONI GRUPPO CONTI
GASKETS FOR GROUP CONTI
DICHTUNGEN FÜR GRUPPE CONTI
JUNTAS PARA GRUPO CONTI

1

2

Photo	LF Code	Features	Suitable for	For machine model
1	**1786010**	ø 56.8x49.4x3.2 mm - PTFE	CONTI 407708	CLUB - XEOS2
2	**1186382**	ø 88x48x2 mm - FREE	CONTI 18900	CLASSICA - CLUB - XEOS2

GUARNIZIONI GRUPPO DELONGHI
GASKETS FOR GROUP DELONGHI
DICHTUNGEN FÜR GRUPPE DELONGHI
JUNTAS PARA GRUPO DELONGHI

1

Photo	LF Code	Features	Suitable for	For machine model
1	**1585004**	ø 73x61x3,5 mm SILICONE	DELONGHI 5313221481	EC680 - EC820 - EC850 - EC860

GUARNIZIONI GRUPPO ECM
GASKETS FOR GROUP ECM
DICHTUNGEN FÜR GRUPPE ECM
JUNTAS PARA GRUPO ECM

1

Photo	LF Code	Features	Suitable for	For machine model
1	**1585002**	75x68x2 mm - CARBO	ECM C449900767	GIOTTO - LAURA - MICHELANGELO - VENEZIANO

GUARNIZIONI GRUPPO ECM MANUFACTURE
GASKETS FOR GROUP ECM MANUFACTURE
DICHTUNGEN FÜR GRUPPE ECM MANUFACTURE
JUNTAS PARA GRUPO ECM MANUFACTURE

1

Photo	LF Code	Features	Suitable for	For machine model
1	**1585002**	75x68x2 mm - CARBO	ECM MANUFACTURE C449900767	CLASSIKA II - ELEKTRONIKA II PROFI - MECHANIKA

GUARNIZIONI GRUPPO EXPOBAR
GASKETS FOR GROUP EXPOBAR
DICHTUNGEN FÜR GRUPPE EXPOBAR
JUNTAS PARA GRUPO EXPOBAR

1

2

Photo	LF Code	Features	Suitable for	For machine model
1	**1186536**	73x68x2 mm - FREE	EXPOBAR 50000010	DIAMANT - EB61 - ELEN - G10 - MARKUS - MARKUS SILVER
2	**1186028**	ø 51 mm	EXPOBAR 50000200	ELEN

GUARNIZIONI GRUPPO FRACINO
GASKETS FOR GROUP FRACINO
DICHTUNGEN FÜR GRUPPE FRACINO
JUNTAS PARA GRUPO FRACINO

1

Photo	LF Code	Features	Suitable for	For machine model
1	**1585001**	76x66x2 mm - FREE	FRACINO FC101	BAMBINO - CHERUB - HEAVENLY

Guarnizioni gruppo macchine caffè
Gaskets for coffee group
Dichtungen für Kaffeemaschinengruppe
Juntas grupos máquinas de café

GUARNIZIONI GRUPPO FUTURMAT
GASKETS FOR GROUP FUTURMAT
DICHTUNGEN FÜR GRUPPE FUTURMAT
JUNTAS PARA GRUPO FUTURMAT

1

2

Photo	LF Code	Features	Suitable for	For machine model
1	**1186172**	80x72 mm - FREE	FUTURMAT 07718604	RIMINI
2	**1186259**	ø 86x1 mm - FREE	FUTURMAT 08150302	PALANCA

GUARNIZIONI GRUPPO GAGGIA
GASKETS FOR GROUP GAGGIA
DICHTUNGEN FÜR GRUPPE GAGGIA
JUNTAS PARA GRUPO GAGGIA

1

2

Photo	LF Code	Features	Suitable for	For machine model
1	**1186523**	68x68x2 mm - CARBO	GAGGIA	D90 - E90
2	**1186980**	73x61x1 mm - FREE	GAGGIA WGA4001084000	DECO - GE - GD

GUARNIZIONI GRUPPO GAGGIA SPAGNA
GASKETS FOR GROUP GAGGIA SPAGNA
DICHTUNGEN FÜR GRUPPE GAGGIA SPAGNA
JUNTAS PARA GRUPO GAGGIA SPAGNA

1

2

Photo	LF Code	Features	Suitable for	For machine model
1	**1186172**	80x72 mm - FREE	GAGGIA SPAGNA 07718604	NERA
2	**1186259**	ø 86x1 mm - FREE	GAGGIA SPAGNA 08150302	PALANCA

GUARNIZIONI GRUPPO ITALCREM
GASKETS FOR GROUP ITALCREM
DICHTUNGEN FÜR GRUPPE ITALCREM
JUNTAS PARA GRUPO ITALCREM

1

2

Photo	LF Code	Features	Suitable for	For machine model
1	**1186172**	80x72 mm - FREE	ITALCREM 07718604	CAPRI
2	**1186259**	ø 86x1 mm - FREE	ITALCREM 08150302	PALANCA

GUARNIZIONI GRUPPO LAVAZZA
GASKETS FOR LAVAZZA GROUP
DICHTUNGEN FÜR GRUPPE LAVAZZA
JUNTAS GRUPO LAVAZZA

1

Photo	LF Code	Features	Suitable for	For machine model
1	**1186980**	73x61x1 mm - FREE	LAVAZZA 10061894	LB4800

GUARNIZIONI GRUPPO MAIRALI
GASKETS FOR GROUP MAIRALI
DICHTUNGEN FÜR GRUPPE MAIRALI
JUNTAS PARA GRUPO MAIRALI

1

2

Photo	LF Code	Features	Suitable for	For machine model
1	**1186172**	80x72 mm - FREE	MAIRALI 07718604	GIULIETTA
2	**1186259**	ø 86x1 mm - FREE	MAIRALI 08150302	PALANCA

Guarnizioni gruppo macchine caffè
Gaskets for coffee group
Dichtungen für Kaffeemaschinengruppe
Juntas grupos máquinas de café

GUARNIZIONI GRUPPO MARZOCCO
GASKETS FOR GROUP MARZOCCO
DICHTUNGEN FÜR GRUPPE MARZOCCO
JUNTAS PARA GRUPO MARZOCCO

1

2

Photo	LF Code	Features	Suitable for	For machine model
1	**1186781**	109x92x2 mm - EPDM	MARZOCCO L100/AG	FB70 - LINEA
2	**1186324**	109x92x2 mm - FREE	MARZOCCO L100/AN	FB70 - LINEA

GUARNIZIONI GRUPPO NUOVA SIMONELLI
GASKETS FOR GROUP NUOVA SIMONELLI
DICHTUNGEN FÜR GRUPPE NUOVA SIMONELLI
JUNTAS PARA GRUPO NUOVA SIMONELLI

1

Photo	LF Code	Features	Suitable for	For machine model
1	**1186546**	100x30x3 mm - CARBO	NUOVA SIMONELLI 02060019	MACDIGIT - MAC2000 - OPTIMA - PROGRAM

GUARNIZIONI GRUPPO PAVONI
GASKETS FOR GROUP PAVONI
DICHTUNGEN FÜR GRUPPE PAVONI
JUNTAS PARA GRUPO PAVONI

1

2

Photo	LF Code	Features	Suitable for	For machine model
1	**1186477**	71x71x2 mm - CARBO	PAVONI 361013	BART
2	**1186980**	73x61x1 mm - FREE	PAVONI 361016	BAR - BART - CAFÈ - HOTEL - PUB

GUARNIZIONI GRUPPO RANCILIO
GASKETS FOR GROUP RANCILIO
DICHTUNGEN FÜR GRUPPE RANCILIO
JUNTAS PARA GRUPO RANCILIO

1

2

3

Photo	LF Code	Features	Suitable for	For machine model
1	**1186827**	ø 125x105x1 mm	RANCILIO 36206008	Z11
2	**1186825**	ø 32 mm	RANCILIO 36206004	Z11
3	**1186826**	ø 32 mm	RANCILIO 36206003	Z11

GUARNIZIONI GRUPPO RENEKA
GASKETS FOR GROUP RENEKA
DICHTUNGEN FÜR GRUPPE RENEKA
JUNTAS PARA GRUPO RENEKA

1

Photo	LF Code	Features	Suitable for	For machine model
1	**1486025**	ø 45x39x3 mm - EPDM	RENEKA 9001842	CONCEPT - LC - PLUS - PRESTIGE - VIVA - VIVAE - VIVAS

GUARNIZIONI GRUPPO SAECO
GASKETS FOR GROUP SAECO
DICHTUNGEN FÜR GRUPPE SAECO
JUNTAS PARA GRUPO SAECO

1

Photo	LF Code	Features	Suitable for	For machine model
1	**1186980**	73x61x1 mm - FREE	SAECO WGA4001084000	AROMA

Guarnizioni gruppo macchine caffè
Gaskets for coffee group
Dichtungen für Kaffeemaschinengruppe
Juntas grupos máquinas de café

GUARNIZIONI GRUPPO SAN MARCO
GASKETS FOR GROUP SAN MARCO
DICHTUNGEN FÜR GRUPPE SAN MARCO
JUNTAS PARA GRUPO SAN MARCO

1

2

3

Photo	LF Code	Features	Suitable for	For machine model
1	**1186285**	ø 51x19x1 mm - CARBO	SAN MARCO	FCS
2	**1186284**	ø 87x75x5.8 mm - EPDM	SAN MARCO 109045	FCS - LEVA
3	**1186521**	95x45 mm - FREE	SAN MARCO 109070	NEW 105 - 100 - 105 - 85 - 95

GUARNIZIONI GRUPPO SANREMO
GASKETS FOR GROUP SANREMO
DICHTUNGEN FÜR GRUPPE SANREMO
JUNTAS PARA GRUPO SANREMO

1

Photo	LF Code	Features	Suitable for	For machine model
1	**5060072**	ø 52x46x3 mm	SANREMO 10503018	TORINO - ZOE

GUARNIZIONI GRUPPO SPAZIALE
GASKETS FOR GROUP SPAZIALE
DICHTUNGEN FÜR GRUPPE SPAZIALE
JUNTAS PARA GRUPO SPAZIALE

1

2

3

4

Photo	LF Code	Features	Suitable for	For machine model
1	**1186518**	ø 112x67x3 mm - CARBO	SPAZIALE	S5 - S5 COMPACT
2	**1186743**	ø 112x66x3.5 mm - PTFE	SPAZIALE	S5 - S5 COMPACT
3	**1186481**	ø 85x70x2 mm - CARBO	SPAZIALE	PROFESSIONALE - SPAZIO - S1 - S3 - S5 COMPACT
4	**1786213**	ø 85x70x2 mm - CARBO	SPAZIALE	PROFESSIONALE - SPAZIO - S1 - S3 - S5 COMPACT

GUARNIZIONI GRUPPO VFA
GASKETS FOR GROUP VFA
DICHTUNGEN FÜR GRUPPE VFA
JUNTAS PARA GRUPO VFA

1

Photo	LF Code	Features	Suitable for	For machine model
1	**1187003**	83x70x2 mm - FREE	VFA 228319	ELITE - MAGESTIC - PRONTA - TORINO

GUARNIZIONI GRUPPO VIBIEMME
GASKETS FOR GROUP VIBIEMME
DICHTUNGEN FÜR GRUPPE VIBIEMME
JUNTAS PARA GRUPO VIBIEMME

1

2

Photo	LF Code	Features	Suitable for	For machine model
1	**1186486**	72x64x2 mm - PAPER	VIBIEMME GUARGRKO	EVOLUTION - KOMETA - LOLLO - MINIMAX - SILVER
2	**1786285**	ø 82.5x3 mm - PTFE	VIBIEMME GUARGRPISTONE	REPLICA

GUARNIZIONI GRUPPO VISACREM
GASKETS FOR GROUP VISACREM
DICHTUNGEN FÜR GRUPPE VISACREM
JUNTAS PARA GRUPO VISACREM

1

2

Photo	LF Code	Features	Suitable for	For machine model
1	**1186172**	80x72 mm - FREE	VISACREM 07718604	NERA
2	**1186259**	ø 86x1 mm - FREE	VISACREM 08150302	PALANCA

GUARNIZIONI GRUPPO WEGA
GASKETS FOR GROUP WEGA
DICHTUNGEN FÜR GRUPPE WEGA
JUNTAS PARA GRUPO WEGA

1

2

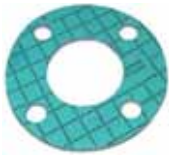
3

Photo	LF Code	Features	Suitable for	For machine model
1	**1186451**	ø 88x40x2 mm - CARBO	WEGA WY12002	AIRY - ATLAS - COLOSSEUM - COMBI NOVA - ESPRESSA
2	**1187002**	ø 88x40x2 mm - PTFE	WEGA WY12002	AIRY - ATLAS - COLOSSEUM - COMBI NOVA - ESPRESSA
3	**1786058**	ø 88x40x2 mm - FREE	WEGA WY12002	AIRY - ATLAS - COLOSSEUM - COMBI NOVA - ESPRESSA

GUARNIZIONI GRUPPO ZACCONI
GASKETS FOR ZACCONI GROUP
DICHTUNGEN FÜR GRUPPE ZACCONI
JUNTAS GRUPO ZACCONI

1

Photo	LF Code	Features	Suitable for	For machine model
1	**1585003**	ø 63x14x1 mm - SILICON	ZACCONI 50	ESPRESSO BABY - RIVIERA

The only spare parts distributor in the commercial catering trade with a

Certified Quality Management System

GUARNIZIONI "OR" CORDA 1,78 mm
O-RING THICKNESS 1.78 mm
O-RING DICHTUNGEN DICKE 1,78 mm
JUNTAS EN ARO "O" GROSOR 1,78 mm

1.78 mm

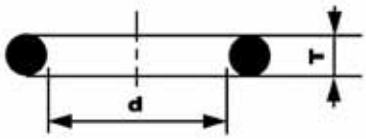

Dimensions (mm) T x d	Model new cross-references	Model old cross-references	LF Code (EPDM)	LF Code (VITON) STANDARD	LF Code (VITON) MIX COLOR	LF Code (SILICONE) RED	LF Code (SILICONE) MIX COLOR
1.78 x 1.78	OR 02007		2111723				
1.78 x 2.57	OR 02010		1186163	1186746			
1.78 x 2.90	OR 02012	OR 0101	1186365		1186842	1186846	
1.78 x 3.69	OR 02015	OR 0102	1186014	1186900	1786095	1786278	1186514
1.78 x 4.48	OR 02018	OR 0103	1186421	1186755		1186861	
1.78 x 5.28	OR 02021	OR 0104	1186362	1786088	1786144	1186903	5056235
1.78 x 6.07	OR 02025	OR 0105	3243139	1186612	1786143	1186611	1486013
1.78 x 6.35	OR 02026	OR R5BIS	1786338				
1.78 x 6.75	OR 0106	OR 0106	3243009	1186435		1186864	D786003
1.78 x 7.66	OR 02031	OR 0107	1186411	1186717	1786085	1186901	
1.78 x 8.73	OR 0108	OR 0108	1186422	1186707		1186902	
1.78 x 9.25	OR 02037	OR 0110	1186803	1186088	1786267	1786087	
1.78 x 10.82	OR 02043		1186346	1786303	1186950	5008673	
1.78 x 11.11	OR 0114	OR 0114	1186626	1186730	1786330	1186877	1786075
1.78 x 12.42	OR 02050		1186352			1186366	
1.78 x 14.00	OR 02056		1186223	1786154	5037375	1786061	
1.78 x 15.60	OR 02062		1186424	1786232	1786208	1786159	
1.78 x 17.17	OR 02068		3243069	1786271	1786165		
1.78 x 18.77	OR 02075		3186440		1186933		5008687
1.78 x 20.35	OR 02081		3243266				1186373
1.78 x 21.95	OR 02087		3243382	1786277			
1.78 x 23.52	OR 02093		1186401				
1.78 x 25.12	OR 02100		3186169				
1.78 x 26.70	OR 02106		3186343			1186863	
1.78 x 28.30	OR 02112		3186754	1186631			
1.78 x 29.87	OR 02118		5010533				
1.78 x 31.47	OR 02125		3243191	1186919		1786139	
1.78 x 33.05	OR 02131		1186003			3186317	
1.78 x 34.65	OR 02137		3243189		1186929	5060454	
1.78 x 36.27	OR 02142					1786122	
1.78 x 37.82	OR 02150			5066580		1786102	
1.78 x 39.45	OR 02155						
1.78 x 41.00	OR 02162				1186960		
1.78 x 44.17	OR 02175						
1.78 x 47.35	OR 02187		7102065			3186657	
1.78 x 50.52	OR 02200		1186956				
1.78 x 53.70	OR 02212						
1.78 x 56.87	OR 02225						
1.78 x 60.05	OR 02237		6456037				
1.78 x 63.22	OR 02250						
1.78 x 66.40	OR 02262						
1.78 x 69.57	OR 02275						
1.78 x 72.75	OR 02287		5059891				
1.78 x 75.92	OR 02300		1186397				
1.78 x 82.27	OR 02325		6456074				
1.78 x 88.62	OR 02350		3186232				
1.78 x 94.97	OR 02375		3122121				
1.78 x 101.32	OR 02400						
1.78 x 107.67	OR 02425						
1.78 x 114.02	OR 02450						
1.78 x 120.37	OR 02475		3122365				
1.78 x 126.72	OR 02500						
1.78 x 133.07	OR 02525		3186239				

GUARNIZIONI "OR" CORDA 2,62 mm
O-RING GASKETS THICKNESS 2.62 mm
O-RING DICHTUNGEN DICKE 2,62 mm
JUNTAS EN ARO "O" GROSOR 2,62 mm

2.62 mm

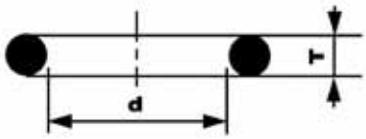

Dimensions (mm) T x d	Model new cross-references	Model old cross-references	LF Code (EPDM)	LF Code (VITON) STANDARD	LF Code (VITON) MIX COLOR	LF Code (SILICONE) RED	LF Code (SILICONE) MIX COLOR
2.62 x 3.63	OR 03014		1186407		1186967		
2.62 x 4.42	OR 03017						
2.62 x 5.23	OR 03021						
2.62 x 6.02	OR 03024		3786668			1786137	
2.62 x 7.59	OR 03030		1186358	1786155	1786197	1786280	
2.62 x 9.13	OR 0109	OR 0109	1186255	5029740		1186910	3186608
2.62 x 9.19	OR 03037	OR 0111	3186340	1786202			
2.62 x 9.92	OR 0112	OR 0112	1186304		1186879	1786049	1186914
2.62 x 10.78	OR 03043	OR 0113	1186318		1186236	3786719	
2.62 x 11.91	OR 0115	OR 0115	1186805	1186709		1186745	
2.62 x 12.37	OR 03050	OR 0116	3060608	3090132		1186458	
2.62 x 13.10	OR 0117	OR 0117	3243086			1186085	1786234
2.62 x 13.95	OR 03056	OR 0118	3186860			1186762	
2.62 x 15.08	OR 0119	OR 0119	1186414	1186714		3523062	
2.62 x 15.54	OR 03062	OR 0120	5033919			5039862	1186073
2.62 x 15.88	OR 0121	OR 0121	3186434	1186246			
2.62 x 17.13	OR 03068	OR 0122	3186181	1786276		1186850	
2.62 x 17.86	OR 0123	OR 0123	3186287			1186000	1199001
2.62 x 18.72	OR 03075	OR 0124	1186356			5059295	
2.62 x 20.24	OR 03081	OR 0127	1186327	5039864		1186026	1186053
2.62 x 20.63	OR 0128	OR 0128	3186183	1186591	1786300		
2.62 x 21.89	OR 03087		1786233			1186796	
2.62 x 22.22	OR 0130	OR 0130	3186253			1186292	
2.62 x 23.47	OR 03093		1186922				
2.62 x 23.81	OR 0132	OR 0132	1186438				
2.62 x 25.07	OR 03100		1186833				
2.62 x 26.65	OR 03106		1186759		5045475		1786243
2.62 x 28.25	OR 03112		3186247	5037072			7104228
2.62 x 29.82	OR 03118		3186458				
2.62 x 31.42	OR 03125		3186244		1186930		
2.62 x 32.99	OR 03131		3186847	5029479		1186920	
2.62 x 34.60	OR 03137		3243250	1186767			
2.62 x 36.14	OR 03143		5027619				
2.62 x 37.77	OR 03150				1786145	3186775	
2.62 x 39.34	OR 03156		3786183	1186184			
2.62 x 40.95	OR 03162		3243389				
2.62 x 42.52	OR 03168		3160040	1186705			
2.62 x 44.12	OR 03175		5008865				
2.62 x 45.69	OR 03181		1186466				
2.62 x 47.30	OR 03187		3160044			1786313	
2.62 x 48.89	OR 03193		1186672	5055114			
2.62 x 50.47	OR 03200		3186245	5034849	1186948		
2.62 x 52.07	OR 03206		4052206				
2.62 x 53.65	OR 03212		3060038			1186847	
2.62 x 55.25	OR 03218				1186961		
2.62 x 56.82	OR 03225						
2.62 x 58.42	OR 03231		3186455			1199075	

Dimensions (mm) T x d	Model new cross-references	Model old cross-references	LF Code (EPDM)	LF Code (VITON) STANDARD	LF Code (VITON) MIX COLOR	LF Code (SILICONE) RED	LF Code (SILICONE) MIX COLOR
2.62 x 60.00	OR 03237		**3243166**				
2.62 x 61.60	OR 03243		**3122252**				
2.62 x 63.17	OR 03250		**3186315**				
2.62 x 64.77	OR 03256		**1786203**	**1786153**			
2.62 x 66.35	OR 03262			**1786225**			
2.62 x 67.95	OR 03268		**3186248**				
2.62 x 69.52	OR 03275						
2.62 x 71.12	OR 03281		**1186625**			**1186405**	
2.62 x 72.69	OR 03287		**1186152**				
2.62 x 74.30	OR 03293					**1786312**	
2.62 x 75.87	OR 03300		**1186237**	**1186779**			
2.62 x 78.94			**3786579**				
2.62 x 82.22	OR 03325		**5006128**				
2.62 x 88.57	OR 03350		**5015751**			**1786124**	
2.62 x 94.92	OR 03375		**1186605**				
2.62 x 101.27	OR 03400						
2.62 x 107.62	OR 03425		**5018599**	**1786224**			
2.62 x 113.97	OR 03450						
2.62 x 120.32	OR 03475		**6456067**				
2.62 x 126.67	OR 03500						
2.62 x 133.02	OR 03525						
2.62 x 139.37	OR 03550						
2.62 x 145.72	OR 03575						
2.62 x 152.07	OR 03600						
2.62 x 158.42	OR 03625						
2.62 x 164.77	OR 03650						
2.62 x 171.12	OR 03675						
2.62 x 177.47	OR 03700						
2.62 x 183.82	OR 03725						
2.62 x 190.17	OR 03750						
2.62 x 196.52	OR 03775						
2.62 x 202.87	OR 03800						
2.62 x 209.22	OR 03825						
2.62 x 215.57	OR 03850		**3786202**				
2.62 x 221.92	OR 03875						
2.62 x 228.27	OR 03900						
2.62 x 234.62	OR 03925						
2.62 x 240.97	OR 03950						
2.62 x 247.32	OR 03975						

GUARNIZIONI "OR" CORDA 3,53 mm
O-RING GASKETS THICKNESS 3.53 mm
O-RING DICHTUNGEN DICKE 3,53 mm
JUNTAS EN ARO "O" GROSOR 3,53 mm

3.53 mm

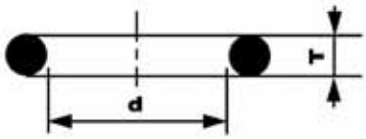

Dimensions (mm) T x d	Model new cross-references	Model old cross-references	LF Code (EPDM)	LF Code (VITON) STANDARD	LF Code (VITON) MIX COLOR	LF Code (SILICONE) RED	LF Code (SILICONE) MIX COLOR
3.53 x 7.51	OR 04028						
3.53 x 9.12	OR 04036		6456047	2102713			
3.53 x 12.29	OR 04050						
3.53 x 13.87	OR 04055		5056553				
3.53 x 15.47	OR 04061		1186019			3786053	
3.53 x 17.04	OR 04067		3786519				
3.53 x 18.64	OR 04075	OR 0125	1186472	1186766		3186610	
3.53 x 20.22	OR 04081	OR 0126	1186238	2111463		1186009	
3.53 x 21.82	OR 04087	OR 0129	1186630	4059475			
3.53 x 23.40	OR 04093	OR 0131	3186143	5028161		1786050	
3.53 x 24.99	OR 04100	OR 0133	5027608				
3.53 x 25.80	OR 00134	OR 0134					1186944
3.53 x 26.58	OR 04106	OR 0135	1186231			1786119	
3.53 x 28.17	OR 04112	OR 0136	1186480	3786008	1786256	1786018	1186869
3.53 x 29.75	OR 04118	OR 0137	3243142	1786167	1186790	1186874	1786199
3.53 x 31.34	OR 04125	OR 0138	1186506			1186010	
3.53 x 32.93	OR 04131	OR 0139	1186655	3186580	1786098	1786210	
3.53 x 34.52	OR 04137	OR 0140	3061040		1186403	1186990	1186963
3.53 x 36.10	OR 04143	OR 0141	3186338			1786118	
3.53 x 37.69	OR 04150	OR 0142	3186197	5034986	1786319	1186905	1786168
3.53 x 39.69	OR 0144	OR 0144	3186606			1786099	1186947
3.53 x 40.86	OR 04162		3067198	40C6450		5039021	
3.53 x 41.28	OR 0146	OR 0146	3186238	1186798			
3.53 x 42.86	OR 0147	OR 0147	3186184	1786117		1786140	
3.53 x 44.04	OR 04175		3186175	1786152			
3.53 x 44.45	OR 0149	OR 0149	5500239				
3.53 x 46.04	OR 0150	OR 0150	3786181				
3.53 x 47.22	OR 04187		3186290	1186190			
3.53 x 47.63	OR 0152	OR 0152	1186087		1186931		
3.53 x 49.21	OR 0153	OR 0153	3786454	5005318		1786116	
3.53 x 50.39	OR 04200		3186601	3786459		4006406	
3.53 x 50.80	OR 0155	OR 0155	3316031		1786311	1186503	
3.53 x 52.39	OR 0156	OR 0156	5038549			1786299	
3.53 x 53.57	OR 04212		1186643		5501390		
3.53 x 53.98	OR 0158	OR 0158	5029231			1186461	
3.53 x 55.56	OR 0159	OR 0159	3186697	1186715			
3.53 x 56.74	OR 04225		1186799				
3.53 x 57.15	OR 0161	OR 0161	1186198	1786292			
3.53 x 58.74	OR 0162	OR 0162	1186199	1786287			
3.53 x 59.92	OR 04237		3316110				
3.53 x 60.33	OR 0164	OR 0164	1186230	1786011			
3.53 x 61.91	OR 0165	OR 0165				1186022	
3.53 x 63.09	OR 04250						
3.53 x 63.50	OR 0167	OR 0167	3186454			1786298	
3.53 x 65.09	OR 0168	OR 0168	1186645				
3.53 x 66.27	OR 04262			1186241			
3.53 x 66.68	OR 0170	OR 0170				1186367	

Dimensions (mm) T x d	Model new cross-references	Model old cross-references	LF Code (EPDM)	LF Code (VITON) STANDARD	LF Code (VITON) MIX COLOR	LF Code (SILICONE) RED	LF Code (SILICONE) MIX COLOR
3.53 x 68.26	OR 0171	OR 0171	**1186763**				
3.53 x 69.44	OR 04275		**5022973**			**1786209**	
3.53 x 69.85	OR 0173	OR 0173					
3.53 x 71.44	OR 0174	OR 0174	**3243160**				
3.53 x 72.62	OR 04287		**2104550**			**1198009**	**1186880**
3.53 x 73.03	OR 0176	OR 0176	**1186641**	**7105274**	**1786254**	**1186858**	
3.53 x 74.61	OR 0177	OR 0177	**3186289**	**5041924**		**1186457**	
3.53 x 75.80	OR 04300		**1186748**			**1786110**	
3.53 x 78.97	OR 04312		**3186271**	**1186698**		**1786268**	
3.53 x 82.14	OR 04325		**1186693**				
3.53 x 85.32	OR 04337		**1186519**				
3.53 x 88.50	OR 04350		**1186873**				**1786261**
3.53 x 91.67	OR 04362		**3061007**				
3.53 x 94.84	OR 04375		**3061011**				
3.53 x 98.02	OR 04387		**3186137**				
3.53 x 101.20	OR 04400		**3160607**	**5501389**		**1786129**	
3.53 x 104.40	OR 04412						
3.53 x 107.50	OR 04425		**3186235**		**1786214**		
3.53 x 110.70	OR 04437		**3061016**				
3.53 x 113.90	OR 04450		**3186456**				
3.53 x 117.10	OR 04462		**5038594**				
3.53 x 120.20	OR 04475		**3186466**			**1186806**	
3.53 x 123.40	OR 04487						
3.53 x 126.60	OR 04500						
3.53 x 129.80	OR 04512			**5500526**			
3.53 x 132.90	OR 04525		**1186941**				
3.53 x 136.10	OR 04537		**1186708**				
3.53 x 139.30	OR 04550						
3.53 x 142.50	OR 04562		**2104552**				
3.53 x 145.60	OR 04575						
3.53 x 148.80	OR 04587		**3122552**				
3.53 x 152.00	OR 04600						
3.53 x 158.30	OR 04625		**3122255**				
3.53 x 164.70	OR 04650		**3122344**				
3.53 x 171.00	OR 04675						
3.53 x 177.40	OR 04700						
3.53 x 183.70	OR 04725		**3061037**				
3.53 x 190.10	OR 04750						
3.53 x 196.40	OR 04775						
3.53 x 202.80	OR 04800						
3.53 x 209.10	OR 04825		**5023163**				
3.53 x 215.50	OR 04850						
3.53 x 221.80	OR 04875						
3.53 x 228.20	OR 04900						
3.53 x 234.50	OR 04925						
3.53 x 240.90	OR 04950						
3.53 x 247.20	OR 04975						
3.53 x 253.60	OR 041000						
3.53 x 266.27	OR 041050						
3.53 x 278.99	OR 041100						
3.53 x 291.69	OR 041150						
3.53 x 304.39	OR 041200						
3.53 x 329.79	OR 041300						
3.53 x 335.19	OR 041400						
3.53 x 380.59	OR 041500						
3.53 x 405.26	OR 041600						
3.53 x 430.66	OR 041700						
3.53 x 456.06	OR 041800						

GUARNIZIONI "OR" CORDA 5,34 mm
O-RING GASKETS THICKNESS 5.34 mm
O-RING DICHTUNGEN DICKE 5,34 mm
JUNTAS EN ARO "O" GROSOR 5,34 mm

5.34 mm

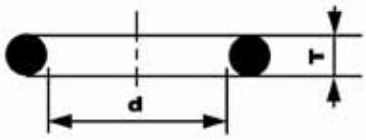

Dimensions (mm) T x d	Model new cross-references	Model old cross-references	LF Code (EPDM)	LF Code (VITON) STANDARD	LF Code (VITON) MIX COLOR	LF Code (SILICONE) RED	LF Code (SILICONE) MIX COLOR
5.34 x 12.07	OR 06050						
5.34 x 13.67	OR 06055						
5.34 x 15.24	OR 06060						
5.34 x 16.62	OR 06065						
5.34 x 18.42	OR 06075						
5.34 x 20.00	OR 06080						
5.34 x 21.59	OR 06085						
5.34 x 23.17	OR 06095						
5.34 x 24.77	OR 06100						
5.34 x 26.34	OR 06105						
5.34 x 27.94	OR 06110						
5.34 x 29.52	OR 06115						
5.34 x 31.12	OR 06125						
5.34 x 32.69	OR 06130						
5.34 x 34.29	OR 06135		**1186220**				
5.34 x 37.47	OR 06150	OR 0143	**3186001**		**5018795**		
5.34 x 40.65	OR 06162	OR 0145	**5026454**	**1786272**			
5.34 x 43.82	OR 06175	OR 0148	**3186339**			**5039034**	
5.34 x 47.00	OR 06187	OR 0151	**3186013**	**5060790**		**3186313**	
5.34 x 50.16	OR 06200	OR 0154	**3186333**			**1786275**	**1786094**
5.34 x 53.34	OR 06212	OR 0157	**1186673**	**3186241**		**1786273**	**5023642**
5.34 x 56.52	OR 06225	OR 0160	**3186014**				**3186314**
5.34 x 59.69	OR 06237	OR 0163	**1186932**			**5038239**	
5.34 x 62.87	OR 06250	OR 0166	**3186331**				
5.34 x 66.04	OR 06262	OR 0169	**1186505**				
5.34 x 69.22	OR 06275	OR 0172	**3160061**				
5.34 x 72.39	OR 06287	OR 0175	**3786685**				
5.34 x 74.63	OR 0178	OR 0178	**3186015**			**1786009**	
5.34 x 75.57	OR 06300	OR 0179	**5039882**	**1186456**			
5.34 x 78.74	OR 06312	OR 0180	**3010048**				
5.34 x 79.77	OR 0181	OR 0181	**5006335**				
5.34 x 81.92	OR 06325	OR 0182	**3243088**				
5.34 x 85.09	OR 06337	OR 0183	**3186335**			**1786246**	
5.34 x 88.27	OR 06350	OR 0184					
5.34 x 89.69	OR 0185	OR 0185					
5.34 x 91.44	OR 06362	OR 0186					
5.34 x 94.62	OR 06375	OR 0187	**1786002**				
5.34 x 97.79	OR 06387	OR 0188					
5.34 x 100.00	OR 0189	OR 0189	**1186749**				
5.34 x 101.00	OR 06400	OR 0190					
5.34 x 104.10	OR 06412	OR 0191					
5.34 x 107.32	OR 06425	OR 0192					
5.34 x 109.50	OR 0193	OR 0193					

Dimensions (mm) T x d	Model new cross-references	Model old cross-references	LF Code (EPDM)	LF Code (VITON) STANDARD	LF Code (VITON) MIX COLOR	LF Code (SILICONE) RED	LF Code (SILICONE) MIX COLOR
5.34 x 110.50	OR 06437	OR 0194	**5010476**				**1186075**
5.34 x 113.70	OR 06450	OR 0195					
5.34 x 117.50	OR 0199	OR 0199					
5.34 x 120.70	OR 0201	OR 0201	**3160615**				
5.34 x 123.80	OR 0203	OR 0203					
5.34 x 127.00	OR 0206	OR 0206					
5.34 x 130.20	OR 0208	OR 0208					
5.34 x 133.40	OR 0210	OR 0210					
5.34 x 136.50	OR 0213	OR 0213					
5.34 x 139.70	OR 0215	OR 0215	**5052966**				
5.34 x 142.90	OR 0217	OR 0217					
5.34 x 146.10	OR 0219	OR 0219					
5.34 x 149.20	OR 0221	OR 0221					
5.34 x 151.77	OR 06600						
5.34 x 158.12	OR 06625						
5.34 x 164.47	OR 06645						
5.34 x 170.82	OR 06670						
5.34 x 177.17	OR 06700						
5.34 x 183.52	OR 06720						
5.34 x 189.87	OR 06745						
5.34 x 196.22	OR 06775						
5.34 x 202.57	OR 06795						
5.34 x 208.92	OR 06820						
5.34 x 215.27	OR 06850						
5.34 x 221.62	OR 06870						
5.34 x 227.97	OR 06895						
5.34 x 234.32	OR 06920						
5.34 x 240.66	OR 06945						
5.34 x 247.01	OR 06975						
5.34 x 253.37	OR 06995						
5.34 x 266.07	OR 061050						
5.34 x 278.77	OR 061100						
5.34 x 291.47	OR 061150						
5.34 x 304.16	OR 061200						
5.34 x 329.67	OR 061300						
5.34 x 354.96	OR 061400						
5.34 x 380.37	OR 061500						
5.34 x 405.26	OR 061600						
5.34 x 430.66	OR 061700						
5.34 x 456.06	OR 061800						
5.34 x 481.41	OR 061900						
5.34 x 506.81	OR 062000						
5.34 x 532.20	OR 062100						

GUARNIZIONI "OR" CORDA 7,00 mm
O-RING GASKETS THICKNESS 7.00 mm
O-RING DICHTUNGEN DICKE 7,00 mm
JUNTAS EN ARO "O" GROSOR 7,00 mm

7.00 mm

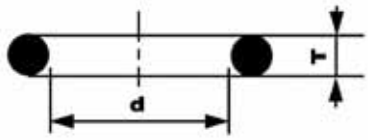

Dimensions (mm) T x d	Model new cross-references	Model old cross-references	LF Code (EPDM)	LF Code (VITON) STANDARD	LF Code (VITON) MIX COLOR	LF Code (SILICONE) RED	LF Code (SILICONE) MIX COLOR
7.00 x 113.70	OR 08450	OR 0196					
7.00 x 114.70	OR 0197	OR 0197					
7.00 x 116.80	OR 08462	OR 0198					
7.00 x 120.00	OR 08475	OR 0200					
7.00 x 123.20	OR 08487	OR 0202				**1786266**	
7.00 x 124.60	OR 0204	OR 0204					
7.00 x 126.37	OR 08500	OR 0205			**5019666**		
7.00 x 129.54	OR 08512	OR 0207					
7.00 x 132.70	OR 08525	OR 0209					
7.00 x 134.50	OR 0211	OR 0211					
7.00 x 135.90	OR 08537	OR 0212	**5050109**				
7.00 x 139.10	OR 08550	OR 0214					
7.00 x 142.20	OR 08562	OR 0216	**2104555**				
7.00 x 145.40	OR 08575	OR 0218					
7.00 x 148.60	OR 08587	OR 0220					
7.00 x 151.80	OR 08600	OR 0222					
7.00 x 155.60	OR 0223	OR 0223	**5006513**				
7.00 x 158.10	OR 08625	OR 0224					
7.00 x 159.50	OR 0225	OR 0225					
7.00 x 161.90	OR 0226	OR 0226					
7.00 x 164.50	OR 08650	OR 0227					
7.00 x 166.70	OR 0228	OR 0228					
7.00 x 168.30	OR 0229	OR 0229					
7.00 x 170.82	OR 08675	OR 0230					
7.00 x 174.60	OR 0231	OR 0231					
7.00 x 177.20	OR 08700	OR 0232					
7.00 x 181.00	OR 0233	OR 0233					
7.00 x 183.52	OR 08725	OR 0234	**5024838**				
7.00 x 187.30	OR 0235	OR 0235					
7.00 x 189.90	OR 08750	OR 0236					
7.00 x 193.70	OR 0237	OR 0237				**5008663**	
7.00 x 196.20	OR 08775	OR 0238					
7.00 x 200.00	OR 0239	OR 0239					
7.00 x 202.57	OR 08800	OR 0240					
7.00 x 208.92	OR 08825	OR 0241					
7.00 x 215.30	OR 08850	OR 0242					
7.00 x 221.60	OR 08875	OR 0243					
7.00 x 227.97	OR 08900	OR 0244					
7.00 x 234.32	OR 08925	OR 0245					
7.00 x 204.67	OR 08950	OR 0246	**5026360**			**5029810**	
7.00 x 247.00	OR 08975	OR 0247					
7.00 x 253.30	OR 081000	OR 0248					
7.00 x 259.70	OR 081025	OR 0249					
7.00 x 266.07	OR 081050	OR 0250	**5034088**				
7.00 x 272.40	OR 081075	OR 0251					
7.00 x 278.70	OR 081100	OR 0252					
7.00 x 285.10	OR 081125	OR 0253					
7.00 x 291.50	OR 081150	OR 0254					
7.00 x 297.80	OR 081175	OR 0255	**5032360**				
7.00 x 304.17	OR 081200	OR 0256					

Dimensions (mm) T x d	Model new cross-references	Model old cross-references	LF Code (EPDM)	LF Code (VITON) STANDARD	LF Code (VITON) MIX COLOR	LF Code (SILICONE) RED	LF Code (SILICONE) MIX COLOR
7.00 x 316.87	OR 081250	OR 0257					
7.00 x 329.57	OR 081300	OR 0258					
7.00 x 342.27	OR 081350	OR 0259					
7.00 x 354.90	OR 081400	OR 0260					
7.00 x 367.67	OR 081450	OR 0261					
7.00 x 380.37	OR 081500	OR 0262					
7.00 x 393.10	OR 081550	OR 0263					
7.00 x 405.26	OR 081600						
7.00 x 417.96	OR 081650						
7.00 x 430.66	OR 081700						
7.00 x 443.36	OR 081750						
7.00 x 456.10	OR 081800						
7.00 x 468.80	OR 081850						
7.00 x 481.50	OR 081900						
7.00 x 494.20	OR 081950						
7.00 x 506.90	OR 082000						
7.00 x 532.30	OR 082100						
7.00 x 557.70	OR 082200						
7.00 x 582.70	OR 082300						
7.00 x 608.10	OR 082400						
7.00 x 633.50	OR 082500						
7.00 x 658.90	OR 082600						

GUARNIZIONI "OR" R1-R2-R3....R10..
GASKETS "OR" R1-R2-R3....R10..
DICHTUNGEN "OR" R1-R2-R3....R10..
JUNTAS "OR" R1-R2-R3....R10..

1.90 - 2.20
2.70 - 3.60 mm

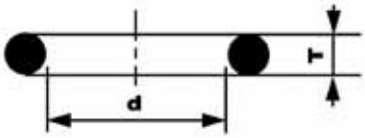

Dimensions (mm) T x d	Model new cross-references	Model old cross-references	LF Code (EPDM)	LF Code (VITON)	LF Code (SILICONE)
1.90 x 2.40	OR R0		**1786108**		
1.90 x 2.60	OR R1				
1.90 x 3.40	OR R2		**2104557**		**5075951**
1.90 x 4.20	OR R3		**1186996**	**1786316**	
1.90 x 4.90	OR R4		**1786286**		
1.90 x 5.70	OR R5		**1186854**	**1786310**	**1186610**
1.90 x 7.20	OR R6		**1186556**	**1186791**	
1.90 x 8.90	OR R7		**5080660**		
2.20 x 9.00	OR R7bis				
2.70 x 11.50	OR R9			**1786317**	
2.70 x 12.10	OR R10		**1786297**		
3.60 x 23.00	OR R18		**1786157**		
3.60 x 27.80	OR R21			**1786156**	

GUARNIZIONI ORM
GASKETS ORM
DICHTUNGEN ORM
JUNTAS ORM

Model	Notes	LF Code	Suitable for
0030-15	EPDM BLACK	**1186855**	SAECO 12000414
0038-20	SILICON BLACK	**1786264**	DELONGHI 5313217701
0039-19	SILICON RED	**1786083**	LAVAZZA 10070109
0040-20	EPDM BLACK	**1186252**	CONTI 403457
0040-20	EPDM BLACK	**1186252**	FAEMA 4701030708
0040-20	EPDM BLACK	**1186252**	FUTURMAT 03070802
0040-20	EPDM BLACK	**1186252**	SAECO 140326661
0040-20	EPDM BLACK	**1186252**	SPAZIALE 04649
0040-20	SILICON RED	**1786257**	BIANCHI 43113416-01
0050-15	EPDM BLACK	**1786219**	ASTORIA/CMA 12662000
0050-20	SILICON RED	**1186648**	SAECO NM01.057
0050-20	VITON BLACK	**1186778**	MARZOCCO H.1.005
0050-20	VITON GREEN	**5050687**	SAECO 11013174
0055-15	EPDM BLACK	**1786150**	SAECO NM02.017
0055-32	VITON GREEN	**1786138**	LAVAZZA 10060300
0057-19	VITON GREEN	**1186966**	CASADIO 402198000
0057-19	VITON GREEN	**1186966**	CIMBALI 402-198-000
0057-19	VITON GREEN	**1186966**	FAEMA 402198000
0058-20	VITON BLACK	**1786304**	FRACINO FC222SG
0059-12	EPDM BLACK	**5034069**	CARIMALI 87.00169
0059-12	EPDM BLACK	**5034069**	NUOVA SIMONELLI 02280036
0060-10	EPDM BLACK	**1786071**	EXPOBAR 50010090
0060-10	EPDM BLACK	**1786071**	CONTI 410838
0060-10	SILICON RED	**1186550**	ASTORIA/CMA 12300013
0060-10	SILICON RED	**1186550**	SPINEL SR.000.060.042
0060-10	SILICON RED	**1186550**	WEGA WY12300013
0060-12	EPDM BLACK	**1186713**	FIAMMA RST 5.0.016.0323
0060-12	EPDM BLACK	**1186713**	SPAZIALE 08354
0060-15	EPDM BLACK	**5026885**	GAGGIA 140328761
0060-15	EPDM BLACK	**5026885**	SAECO 140328761
0060-15	SILICON RED	**1786329**	GAGGIA 12000070
0060-15	SILICON RED	**1786329**	SAECO 12000070
0060-18	EPDM BLACK	**1786302**	FIAMMA RST 5.0.002.0122
0060-20	SILICON RED	**1186867**	DELONGHI 5332144800
0060-20	SILICON RED	**1186867**	SAECO 140324459
0060-20	TERMOIL	**1786322**	GAGGIA 140324461
0060-20	TERMOIL	**1786322**	SAECO 140324461
0060-30	SILICON BLACK	**5008675**	GAGGIA 140324362
0060-30	SILICON BLACK	**5008675**	SAECO 140324362
0060-36	SILICON BLACK	**1486016**	DELONGHI 5332173500
0072-15	EPDM BLACK	**1786063**	RENEKA 9001884
0080-15	EPDM BLACK	**1186675**	SAECO 140324961

Model	Notes	LF Code	Suitable for
0080-20	EPDM BLACK	**1786149**	PAVONI 0ENM02004
0080-20	EPDM BLACK	**1786149**	SAECO NM02.004
0080-20	SILICON RED	**1186852**	SAECO 140320459
0080-20	TERMOIL BLACK	**1786111**	SAECO 140320461
0080-20	VITON BLACK	**1186687**	GRIMAC 1110800040-GR756
0089-27	VITON GREEN	**1186968**	CIMBALI 402-197-000
0089-27	VITON GREEN	**1186968**	FAEMA 402197000
0090-20	EPDM BLACK	**1186885**	SAECO NM02.012
0090-20	SILICON RED	**1186647**	SAECO 140320762
0090-25	EPDM BLACK	**1786074**	SAECO NM02.018
0102-25	PTFE	**1786260**	NUOVA SIMONELLI 02600004
0120-20	EPDM BLACK	**1786028**	GAGGIA 12000893
0120-20	EPDM BLACK	**1786028**	SAECO 12000893
0120-20	VITON GREEN	**1186157**	CONTI 409631
0130-20	EPDM BLACK	**5074822**	GAGGIA 12000620
0130-20	EPDM BLACK	**5074822**	SAECO 12000620
0140-20	NBR BLACK	**1186484**	BFC 0510182
0140-20	NBR BLACK	**1186484**	BRASILIA 18514.0.00.02
0140-20	NBR BLACK	**1186484**	ROYAL 0510182
0160-20	EPDM BLACK	**1186165**	BRASILIA 18682.0.00.02
0160-20	EPDM BLACK	**1186165**	CARIMALI 95.05027
0160-20	EPDM BLACK	**1186165**	NUOVA SIMONELLI 02280037
0160-20	EPDM BLACK	**1186712**	SPAZIALE 08289
0170-20	EPDM BLACK	**1786295**	FIAMMA RST 5.0.016.0225
0170-20	EPDM BLACK	**1786295**	VIBIEMME GUARORVALESPE
0170-30	NBR BLACK	**1186773**	ASTORIA/CMA 12336000
0190-10	EPDM BLACK	**5008685**	GAGGIA 140328461
0190-10	EPDM BLACK	**5008685**	SAECO 140328461
0248-18	SILICON BLACK	**1786269**	DELONGHI 5313214431
0250-40	NBR BLACK	**1186772**	ASTORIA/CMA 12300027
0250-40	NBR BLACK	**1186772**	WEGA WY12300027
0320-25	NBR BLACK	**1186857**	SAECO NM03.012
0320-40	SILICON RED	**1186862**	SAECO NM01.044
0350-41	SILICON RED	**1486015**	DELONGHI 5332149100
0380-40	SILICON RED	**1186856**	SAECO 140329262
0500-35	NBR BLACK	**5079552**	LINCAR INOX 40040600
0500-40	SILICON RED	**1186453**	RANCILIO 36404113
0530-15	NBR BLACK	**5062671**	GAGGIA 140328960
0530-15	NBR BLACK	**5062671**	SAECO 140328960
0550-35	NBR BLACK	**5079553**	LINCAR INOX 40040601
0680-20	EPDM BLACK	**1186381**	CONTI 173100
0730-40	VITON BLACK	**1186868**	SAECO NM04.010
0780-30	EPDM BLACK	**1186507**	FAEMA 4701026909
0790-20	SILICON TRANSPARENT	**1786077**	LAVAZZA 10088106
0800-20	SILICON RED	**5040701**	ASCASO I...50

GUARNIZIONI ORM
GASKETS ORM
DICHTUNGEN ORM
JUNTAS ORM

Model	Notes	LF Code	Suitable for
0800-20	SILICON RED	**5040701**	ASCASO I...50
0060-10	SILICON RED	**1186550**	ASTORIA/CMA 12300013
0250-40	NBR BLACK	**1186772**	ASTORIA/CMA 12300027
0170-30	NBR BLACK	**1186773**	ASTORIA/CMA 12336000
0050-15	EPDM BLACK	**1786219**	ASTORIA/CMA 12662000
0140-20	NBR BLACK	**1186484**	BFC 0510182
0040-20	SILICON RED	**1786257**	BIANCHI 43113416-01
0140-20	NBR BLACK	**1186484**	BRASILIA 18514.0.00.02
0160-20	EPDM BLACK	**1186165**	BRASILIA 18682.0.00.02
0059-12	EPDM BLACK	**5034069**	CARIMALI 87.00169
0160-20	EPDM BLACK	**1186165**	CARIMALI 95.05027
0057-19	VITON GREEN	**1186966**	CASADIO 402198000
0089-27	VITON GREEN	**1186968**	CIMBALI 402-197-000
0057-19	VITON GREEN	**1186966**	CIMBALI 402-198-000
0680-20	EPDM BLACK	**1186381**	CONTI 173100
0040-20	EPDM BLACK	**1186252**	CONTI 403457
0120-20	VITON GREEN	**1186157**	CONTI 409631
0060-10	EPDM BLACK	**1786071**	CONTI 410838
0248-18	SILICON BLACK	**1786269**	DELONGHI 5313214431
0038-20	SILICON BLACK	**1786264**	DELONGHI 5313217701
0060-20	SILICON RED	**1186867**	DELONGHI 5332144800
0350-41	SILICON RED	**1486015**	DELONGHI 5332149100
0060-36	SILICON BLACK	**1486016**	DELONGHI 5332173500
0060-10	EPDM BLACK	**1786071**	EXPOBAR 50010090
0089-27	VITON GREEN	**1186968**	FAEMA 402197000
0057-19	VITON GREEN	**1186966**	FAEMA 402198000
0780-30	EPDM BLACK	**1186507**	FAEMA 4701026909
0040-20	EPDM BLACK	**1186252**	FAEMA 4701030708
0060-18	EPDM BLACK	**1786302**	FIAMMA RST 5.0.002.0122
0170-20	EPDM BLACK	**1786295**	FIAMMA RST 5.0.016.0225
0060-12	EPDM BLACK	**1186713**	FIAMMA RST 5.0.016.0323
0058-20	VITON BLACK	**1786304**	FRACINO FC222SG
0040-20	EPDM BLACK	**1186252**	FUTURMAT 03070802
0060-15	SILICON RED	**1786329**	GAGGIA 12000070
0850-30	SILICON RED	**5074832**	GAGGIA 12000087
0130-20	EPDM BLACK	**5074822**	GAGGIA 12000620
0120-20	EPDM BLACK	**1786028**	GAGGIA 12000893
0060-20	TERMOIL	**1786322**	GAGGIA 140324461
0060-30	SILICON BLACK	**5008675**	GAGGIA 140324362
0190-10	EPDM BLACK	**5008685**	GAGGIA 140328461
0060-15	EPDM BLACK	**5026885**	GAGGIA 140328761
0530-15	NBR BLACK	**5062671**	GAGGIA 140328960
0080-20	VITON BLACK	**1186687**	GRIMAC 1110800040-GR756
0055-32	VITON GREEN	**1786138**	LAVAZZA 10060300
0039-19	SILICON RED	**1786083**	LAVAZZA 10070109
0790-20	SILICON TRANSPARENT	**1786077**	LAVAZZA 10088106

Model	Notes	LF Code	Suitable for
0050-20	VITON BLACK	**1186778**	MARZOCCO H.1.005
0059-12	EPDM BLACK	**5034069**	NUOVA SIMONELLI 02280036
0160-20	EPDM BLACK	**1186165**	NUOVA SIMONELLI 02280037
0102-25	PTFE	**1786260**	NUOVA SIMONELLI 02600004
0080-20	EPDM BLACK	**1786149**	PAVONI 0ENM02004
0500-40	SILICON RED	**1186453**	RANCILIO 36404113
0072-15	EPDM BLACK	**1786063**	RENEKA 9001884
0170-20	EPDM BLACK	**1786295**	RENEKA 9005075
0140-20	NBR BLACK	**1186484**	ROYAL 0510182
0050-20	VITON GREEN	**5050687**	SAECO 11013174
0060-15	SILICON RED	**1786329**	SAECO 12000070
0850-30	SILICON RED	**5074832**	SAECO 12000087
0030-15	EPDM BLACK	**1186855**	SAECO 12000414
0130-20	EPDM BLACK	**5074822**	SAECO 12000620
0120-20	EPDM BLACK	**1786028**	SAECO 12000893
0080-20	SILICON RED	**1186852**	SAECO 140320459
0080-20	TERMOIL BLACK	**1786111**	SAECO 140320461
0090-20	SILICON RED	**1186647**	SAECO 140320762
0060-20	SILICON RED	**1186867**	SAECO 140324459
0060-20	TERMOIL	**1786322**	SAECO 140324461
0060-30	SILICON BLACK	**5008675**	SAECO 140324362
0080-15	EPDM BLACK	**1186675**	SAECO 140324961
0040-20	EPDM BLACK	**1186252**	SAECO 140326661
0190-10	EPDM BLACK	**5008685**	SAECO 140328461
0060-15	EPDM BLACK	**5026885**	SAECO 140328761
0530-15	NBR BLACK	**5062671**	SAECO 140328960
0380-40	SILICON RED	**1186856**	SAECO 140329262
0320-40	SILICON RED	**1186862**	SAECO NM01.044
0050-20	SILICON RED	**1186648**	SAECO NM01.057
0080-20	EPDM BLACK	**1786149**	SAECO NM02.004
0090-20	EPDM BLACK	**1186885**	SAECO NM02.012
0055-15	EPDM BLACK	**1786150**	SAECO NM02.017
0090-25	EPDM BLACK	**1786074**	SAECO NM02.018
0320-25	NBR BLACK	**1186857**	SAECO NM03.012
0730-40	VITON BLACK	**1186868**	SAECO NM04.010
0040-20	EPDM BLACK	**1186252**	SPAZIALE 04649
0160-20	EPDM BLACK	**1186712**	SPAZIALE 08289
0060-12	EPDM BLACK	**1186713**	SPAZIALE 08354
0060-10	SILICON RED	**1186550**	SPINEL SR.000.060.042
0170-20	EPDM BLACK	**1786295**	VIBIEMME GUARORVALESPE

GUARNIZIONI PER VETRO LIVELLO
LEVEL GLASS GASKETS
DICHTUNGEN FÜR NIVEAUGLAS
JUNTAS PARA CRISTAL NIVEL

1

2

3

4

Photo	LF Code	Suitable for
1	**1186733**	SPAZIALE
2	**1186211**	BEZZERA
3	**1186226**	CIMBALI - GAGGIA - LAVAZZA - PAVONI - SAECO - SPAZIALE
4	**1186257**	SAN MARCO

GUARNIZIONI PER VETRO LIVELLO
LEVEL GLASS GASKETS
DICHTUNGEN FÜR NIVEAUGLAS
JUNTAS PARA CRISTAL NIVEL

1

2

3

4

5

6

Photo	LF Code	Dimensions (mm)	Suitable for
1	**1186173**	ø 16.5x10x12.5	MARCFI-ANCAS
1	**1186221**	ø 19x11.5x10	CARIMALI - CONTI - NUOVA SIMONELLI
2	**1186270**	ø 18x11x4	CONTI
2	**1186227**	ø 21x11.5x5	BRUGNETTI/AURORA - FAEMA - FUTURMAT
2	**1186251**	ø 18x12x3	RANCILIO
2	**1186360**	ø 18x12x2	CIMBALI
3	**1401002**	ø 14.5x10x7	BEZZERA
4	**1186206**	ø 16x10x8	ASTORIA/CMA - BFC - GRIMAC - LAVAZZA - NUOVA SIMONELLI - ROYAL
5	**1186375**	ø 15x9x8	ELEKTRA
5	**1186469**	ø 15x9x5	GAGGIA - PAVONI - ZACCONI
6	**1186498**	ø 14.5x11x2	EXPOBAR
6	**1186256**	ø 31x19x3	SAN MARCO

GUARNIZIONI PER VETRO LIVELLO
LEVEL GLASS GASKETS
DICHTUNGEN FÜR NIVEAUGLAS
JUNTAS PARA CRISTAL NIVEL

1 2 3 4 5 6

Photo	LF Code	Dimensions (mm)	Suitable for
1	**1527541**	---	CIMBALI - FAEMA - FUTURA - SCALA
2	**1186228**	90x31x1	CIMBALI - FAEMA - FUTURA
3	**1186230**	67.4x60x3.5 EPDM	CIMBALI - FAEMA
3	**1786011**	67.4x60x3.5 VITON	CIMBALI - FAEMA
4	**1186991**	72x22x3	CIMBALI
5	**1186242**	62x55x1	MARZOCCO
6	**1186932**	70x59.5x5.5	ELEKTRA

GUARNIZIONI PER VETRO LIVELLO
GASKETS FOR LEVEL GLASS
DICHTUNGEN FÜR NIVEAUGLAS
JUNTAS PARA CRISTAL NIVEL

1 2 3 4 5 6

Photo	LF Code	Dimensions (mm)	Suitable for
1	**1186803**	12.7x9.2x1.7	RANCILIO - PROMAC
2	**1186626**	14.5x11x1.7	NUOVA SIMONELLI
3	**1186318**	16x10.7x2.6	GAGGIA - SCALA - FIORENZATO CS - VIBIEMME
4	**1186236**	16x10.7x2.6	QUALITY ESPRESSO - EXPOBAR
5	**1401001**	16x11x2.5	FRACINO
5	**1186709**	17x12x2.5	MARCFI-ANCAS
6	**1186745**	17x12x2.5	MARCFI-ANCAS

GUARNIZIONI PORTAFILTRO ASCASO
GASKETS FOR FILTER HOLDERS ASCASO
DICHTUNGEN SIEBTRÄGER ASCASO
JUNTAS PORTAFILTRO ASCASO

1

2

Photo	LF Code	Dimensions (mm)	Notes	Suitable for	For machine model
1	**1486039**	ø 73.5x54x8.5	INT. CUTS - SPACCHI INT.	ASCASO I.2281	DREAM PM (+09/2012) - ARC PM (+09/2012) - BASIC PM (+09/2012)
2	**5028398**	ø 72x54x5	---	ASCASO I...57	DREAM - ARC - ELIPSE - BASIC

GUARNIZIONI PORTAFILTRO ASTORIA/CMA
FILTER HOLDER GASKETS ASTORIA/CMA
SIEBTRÄGERDICHTUNGEN ASTORIA/CMA
JUNTAS PORTAFILTROS ASTORIA/CMA

1

2

3

4

5

Photo	LF Code	Dimensions (mm)	Notes	Suitable for	For machine model
1	**1486030**	ø 72x56x8	INT. CUTS - SPACCHI INT.	ASTORIA/CMA 12217	STANDARD
1	**1486029**	ø 72x56x8.5	INT. CUTS - SPACCHI INT.	ASTORIA/CMA 12215	STANDARD
1	**1786062**	ø 72x56x8	ORIGINAL / INT. CUTS - SPACCHI INT.	ASTORIA/CMA 12217	STANDARD
1	**1186678**	ø 72x56x8.5	ORIGINAL / INT. CUTS - SPACCHI INT.	ASTORIA/CMA 12215	STANDARD
2	**1186622**	ø 72x56x8	---	ASTORIA/CMA	STANDARD
3	**1186650**	ø 67x56x5.5	ORIGINAL	ASTORIA/CMA 12216	RAPALLO AL
3	**1186656**	ø 67x56x6	---	ASTORIA/CMA 12219	RAPALLO AL
4	**1786056**	ø 64x52x6.3	INT. CUTS - SPACCHI INT.	ASTORIA/CMA 12217001	PLUS4YOU
4	**5047859**	ø 64x52x7	INT. CUTS - SPACCHI INT.	ASTORIA/CMA 12217002	PLUS4YOU
4	**5035642**	ø 64x52x6.3	ORIGINAL / INT. CUTS - SPACCHI INT.	ASTORIA/CMA 12217001	PLUS4YOU
4	**1486043**	ø 64x52x7	ORIGINAL / INT. CUTS - SPACCHI INT.	ASTORIA/CMA 12217002	PLUS4YOU
5	**1486009**	ø 53x42x8	ORIGINAL	ASTORIA/CMA 12653001	PRIMA

GUARNIZIONI PORTAFILTRO AZKOYEN
FILTER HOLDER GASKETS AZKOYEN
SIEBTRÄGERDICHTUNGEN AZKOYEN
JUNTAS PORTAFILTRO AZKOYEN

1

2 - SILICONE

Photo	LF Code	Dimensions (mm)	Notes	Suitable for	For machine model
1	**1186722**	ø 73x57x8	---	AZKOYEN	AZ04 - BRAVO - VIENNA
1	**1186723**	ø 73x57x8.5	---	AZKOYEN	AZ04 - BRAVO - VIENNA
1	**1186724**	ø 73x57x9	---	AZKOYEN	AZ04 - BRAVO - VIENNA
1	**1486724**	ø 73x57x10	---	AZKOYEN	AZ04 - BRAVO - VIENNA
2	**1486040**	ø 73x57x8.5	---	AZKOYEN	AZ04 - BRAVO - VIENNA

GUARNIZIONI PORTAFILTRO BEZZERA
FILTER HOLDER GASKETS BEZZERA
SIEBTRÄGERDICHTUNGEN BEZZERA
JUNTAS PORTAFILTRO BEZZERA

1

2

3

4

5

6 - SILICONE

Photo	LF Code	Dimensions (mm)	Notes	Suitable for	For machine model
1	**1786059**	ø 72x55.5x9.3	CONICAL / EXT. CUTS - SPACCHI EST.	BEZZERA 7493008	BZ07 - BZ35 - BZ40 - B2000 - B2000AL - B4000 - ELLISSE - ELLISSE AL
2	**1486020**	ø 69x57x6	OR	BEZZERA 7496038	B2000 - B3000 - B4000
2	**1486018**	ø 66x56.5x5.3	OR	BEZZERA 7496029	B2000 - B2000 AL - B2006 AL - B3000 - B4000 - EBBIS AL - ELLISSE AL
3	**1186622**	ø 72x56x8	---	BEZZERA 5493016	B2000 - B3000
3	**1186722**	ø 73x57x8	---	BEZZERA 5493039	GALATEA - GALATEA DOMUS - GIULIA - UNICA
3	**1186723**	ø 73x57x8.5	---	BEZZERA	GALATEA - GALATEA DOMUS - GIULIA - UNICA
3	**1186724**	ø 73x57x9	---	BEZZERA	GALATEA - GALATEA DOMUS - GIULIA - UNICA
3	**1486724**	ø 73x57x10	---	BEZZERA	GALATEA - GALATEA DOMUS - GIULIA - UNICA
4	**1186812**	ø 72x57x8	EXT. CUTS - SPACCHI EST.	BEZZERA 5493034	BZ02 - BZ35 - BZ40 - BZ99
5	**1786057**	ø 68x54x6	---	BEZZERA 5493028	HOBBY
6	**1486040**	ø 73x57x8.5	INT. CUTS - SPACCHI INT.	BEZZERA	GALATEA - GALATEA DOMUS - GIULIA - UNICA

GUARNIZIONI PORTAFILTRO BFC
FILTER HOLDER GASKETS BFC
SIEBTRÄGERDICHTUNGEN BFC
JUNTAS PORTAFILTRO BFC

1

2

3

4

Photo	LF Code	Dimensions (mm)	Notes	Suitable for	For machine model
1	**1186891**	ø 73x57x8	---	BFC 0520090	CLASSICA - DELUX - GALILEO - IMOLA - LIRA - MARANELLO - MONZA
2	**1186894**	ø 73x57x8	INT. CUTS - SPACCHI INT.	BFC 2002310	GRANDOGE
3	**1486027**	ø 71.5x55x3.6	---	BFC 4901048	AZZURRA
4	**1486026**	ø 65.5x55.5x5.5	---	BFC 0530200	CLASSICA LEVA

GUARNIZIONI PORTAFILTRO BIALETTI
GASKETS FOR FILTER HOLDERS BIALETTI
DICHTUNGEN SIEBTRÄGER BIALETTI
JUNTAS PORTAFILTRO BIALETTI

1

Photo	LF Code	Dimensions (mm)	Notes	Suitable for	For machine model
1	**1486038**	ø 58 mm	---	BIALETTI 912990420	MOKONA CF40

GUARNIZIONI PORTAFILTRO BIANCHI
FILTER HOLDER GASKETS BIANCHI
SIEBTRÄGERDICHTUNGEN BIANCHI
JUNTAS PORTAFILTRO BIANCHI

1

2 - SILICONE

Photo	LF Code	Dimensions (mm)	Notes	Suitable for	For machine model
1	**1186722**	ø 73x57x8	---	BIANCHI 36361516	LUCIA - SARA - SOFIA
1	**1186723**	ø 73x57x8.5	---	BIANCHI 36361516	LUCIA - SARA - SOFIA
1	**1186724**	ø 73x57x9	---	BIANCHI 36361516	LUCIA - SARA - SOFIA
1	**1486724**	ø 73x57x10	---	BIANCHI 36361516	LUCIA - SARA - SOFIA
2	**1486040**	ø 73x57x8.5	INT. CUTS - SPACCHI INT.	BIANCHI 36361516	LUCIA - SARA - SOFIA

GUARNIZIONI PORTAFILTRO BRASILIA
FILTER HOLDER GASKETS BRASILIA
SIEBTRÄGERDICHTUNGEN BRASILIA
JUNTAS PORTAFILTRO BRASILIA

1

2

3

4

5

6

Photo	LF Code	Dimensions (mm)	Notes	Suitable for	For machine model
1	**1186654**	ø 70x57x8	EXT. CUTS - SPACCHI EST.	BRASILIA 04408.0.00.02	CENTURY - PORTOFINO - ROMA
2	**1186702**	ø 70x56x8.5	---	BRASILIA 05820.0.00.02	BELLE EPOQUE - CENTURY - FIRENZE
2	**1186622**	ø 71x56x8	---	---	---
2	**1186061**	ø 72.5x57x8	---	BRASILIA 04367.0.00.02	CENTURY RESTYLING - EXCELSIOR - FIRENZE - GRADISCA
3	**1186657**	ø 66x56x6	CONICAL	BRASILIA 01393.0.00.02	BELLE EPOQUE - CENTURY - FIRENZE
4	**1186656**	ø 67x56x6	---	---	OLD MODELS - MODELLI VECCHI
5	**1186063**	ø 64x55x5	SILICON	BRASILIA 09207.0.00.02	CLUB - LADY
6	**1486018**	ø 66x56.5x5.3	---	BRASILIA 00844.0.00.02	---

GUARNIZIONI PORTAFILTRO BRUGNETTI/AURORA
FILTER HOLDER GASKETS BRUGNETTI/AURORA
SIEBTRÄGERDICHTUNGEN BRUGNETTI/AURORA
JUNTAS PORTAFILTRO BRUGNETTI/AURORA

1

Photo	LF Code	Dimensions (mm)	Notes	Suitable for	For machine model
1	**1186711**	ø 72x56x9	EXT. CUTS - SPACCHI EST.	BRUGNETTI-AURORA 000177	ALEXIA - C

GUARNIZIONI PORTAFILTRO CARIMALI
FILTER HOLDER GASKETS CARIMALI
SIEBTRÄGERDICHTUNGEN CARIMALI
JUNTAS PORTAFILTRO CARIMALI

1

Photo	LF Code	Dimensions (mm)	Notes	Suitable for	For machine model
1	**1186671**	ø 69x57x7.5	---	CARIMALI 87.00122.00.19	CENTO50 - ETABETA - ETABETAV2 - E9 - KIKKO - PRATICA - TEMASTYLE
1	**5038459**	ø 69x57x7.5	ORIGINAL	CARIMALI 87.00122.00.19	CENTO50 - ETABETA - ETABETAV2 - E9 - KIKKO - PRATICA - TEMASTYLE

GUARNIZIONI PORTAFILTRO CASADIO
FILTER HOLDER GASKETS CASADIO
SIEBTRÄGERDICHTUNGEN CASADIO
JUNTAS PORTAFILTRO CASADIO

1

2

Photo	LF Code	Dimensions (mm)	Notes	Suitable for	For machine model
1	**1186701**	ø 71x56x9	CONICAL	CASADIO 401261010	VENTI
1	**5032979**	ø 71x56x9	ORIGINAL / CONICAL	CASADIO 401261010	VENTI
2	**1186721**	ø 74x57.5x8	INT. CUTS - SPACCHI INT.	CASADIO 402199010	DIECI - DODICI - DAFNE
2	**5028118**	ø 74x57.5x8	ORIGINAL / INT. CUTS - SPACCHI INT.	CASADIO 402199010	DIECI - DODICI

GUARNIZIONI PORTAFILTRO CIMBALI
FILTER HOLDER GASKETS CIMBALI
SIEBTRÄGERDICHTUNGEN CIMBALI
JUNTAS PORTAFILTRO CIMBALI

1

2

3

4

Photo	LF Code	Dimensions (mm)	Notes	Suitable for	For machine model
1	**1186701**	ø 71x56x9	CONICAL	CIMBALI 401-261-010	JUNIOR - M20 - M21 - M24 - M27 - M28 - M30 - M31 - M32 - M39 - M39GT
1	**5032979**	ø 71x56x9	ORIGINAL / CONICAL	CIMBALI 401-261-010	JUNIOR - M20 - M21 - M24 - M27 - M28 - M30 - M31 - M32 - M39 - M39GT
2	**1186721**	ø 74x57.5x8	INT. CUTS - SPACCHI INT.	CIMBALI 402-199-010	M272008
2	**5028118**	ø 74x58x8	ORIGINAL / INT. CUTS - SPACCHI INT.	CIMBALI 402-199-010	M272008
3	**1186702**	ø 70x56x8.5	---	CIMBALI 400-181-010	M15 - M25
4	**1186077**	ø 60.5x48.5x5	---	CIMBALI 400-182-000	MICRO

GUARNIZIONI PORTAFILTRO CONTI
FILTER HOLDER GASKETS CONTI
SIEBTRÄGERDICHTUNGEN CONTI
JUNTAS PORTAFILTRO CONTI

1

Photo	LF Code	Dimensions (mm)	Notes	Suitable for	For machine model
1	**1186676**	72x56x8.5	EXT. CUTS - SPACCHI EST.	CONTI 002710	TWIN STAR2
1	**1186711**	72x56x9	EXT. CUTS - SPACCHI EST.	CONTI 2700	CLUB - XEOS2

GUARNIZIONI PORTAFILTRO DALLA CORTE
FILTER HOLDER GASKETS DALLA CORTE
SIEBTRÄGERDICHTUNGEN DALLA CORTE
JUNTAS PORTAFILTRO DALLA CORTE

1 - HNBR

Photo	LF Code	Dimensions (mm)	Notes	Suitable for	For machine model
1	**1486100**	ø 68x53.5x7	EXT. CUTS - SPACCHI EST.	DALLA CORTE B-MC-0128	---

GUARNIZIONI PORTAFILTRO DELONGHI
FILTER HOLDER GASKETS DELONGHI
SIEBTRÄGERDICHTUNGEN DELONGHI
JUNTAS PORTAFILTRO DELONGHI

1

2

3

Photo	LF Code	Dimensions (mm)	Notes	Suitable for	For machine model
1	**1486037**	ø 74,5x32x12	ORIGINAL	DELONGHI 5313274079	ECI341 - ECOV311 - ECO311 - ECP31.21 - ECP33.21 - ECP35.31
2	**1486011**	ø 74x36x11	ORIGINAL	DELONGHI 5332140900	ECOV310AZ - EC155 - EC300M
3	**1486035**	ø 58x46x8	ORIGINAL	DELONGHI 5313221491	EC680 - EC820 - EC850 - EC860

GUARNIZIONI PORTAFILTRO ECM
FILTER HOLDER GASKETS ECM
SIEBTRÄGERDICHTUNGEN ECM
JUNTAS PORTAFILTRO ECM

1

Photo	LF Code	Dimensions (mm)	Notes	Suitable for	For machine model
1	**1186894**	ø 73x57x8	INT. CUTS - SPACCHI INT.	ECM C449900229	GIOTTO - LAURA - MICHELANGELO - RAFFAELLO - VENEZIANO

GUARNIZIONI PORTAFILTRO ECM MANUFACTURE
FILTER HOLDER GASKETS ECM MANUFACTURE
SIEBTRÄGERDICHTUNGEN ECM MANUFACTURE
JUNTAS PORTAFILTRO ECM MANUFACTURE

1

Photo	LF Code	Dimensions (mm)	Notes	Suitable for	For machine model
1	**1186894**	ø 73x57x8	INT. CUTS - SPACCHI INT.	ECM MANUFACTURE C449900229	CLASSIKA II - ELEKTRONIKA II PROFI - MECHANIKA

GUARNIZIONI PORTAFILTRO ELEKTRA
FILTER HOLDER GASKETS ELEKTRA
SIEBTRÄGERDICHTUNGEN ELEKTRA
JUNTAS PORTAFILTRO ELEKTRA

1

2

Photo	LF Code	Dimensions (mm)	Notes	Suitable for	For machine model
1	**1186943**	ø 65x54x5.7	OR	ELEKTRA 01917035	CLASSIC - KAPPA - MICROCASA - MODERN - SIXTIES
1	**1486019**	ø 57.7x47x5.3	OR	ELEKTRA 00174035	MICROCASA
2	**1186063**	ø 64x55x5	SILICON	ELEKTRA 01963035	MINIVERTICALE

GUARNIZIONI PORTAFILTRO EXPOBAR
FILTER HOLDER GASKETS EXPOBAR
SIEBTRÄGERDICHTUNGEN EXPOBAR
JUNTAS PORTAFILTRO EXPOBAR

1

2 - SILICONE

Photo	LF Code	Dimensions (mm)	Notes	Suitable for	For machine model
1	**1186722**	ø 73x57x8	---	EXPOBAR 75000081	DIAMANT - EB61 - ELEN - G10 - MARCUS - MARKUS SILVER - MEGACREM
1	**1186723**	ø 73x57x8.5	---	EXPOBAR 75000083	DIAMANT - EB61 - ELEN - G10 - MARCUS - MARKUS SILVER - MEGACREM
1	**1186724**	ø 73x57x9	---	EXPOBAR 75000085	DIAMANT - EB61 - ELEN - G10 - MARCUS - MARKUS SILVER - MEGACREM
1	**1486724**	ø 73x57x10	---	EXPOBAR	DIAMANT - EB61 - ELEN - G10 - MARCUS - MARKUS SILVER - MEGACREM
2	**1486040**	ø 73x57x8.5	INT. CUTS - SPACCHI INT.	EXPOBAR 75000083	DIAMANT - EB61 - ELEN - G10 - MARCUS - MARKUS SILVER - MEGACREM

GUARNIZIONI PORTAFILTRO FAEMA
FILTER HOLDER GASKETS FAEMA
SIEBTRÄGERDICHTUNGEN FAEMA
JUNTAS PORTAFILTRO FAEMA

1

2

3

4 - SILICONE

Photo	LF Code	Dimensions (mm)	Notes	Suitable for	For machine model
1	**1186722**	ø 73x57x8	---	FAEMA 4701016528	COMPACT - DUE - EXPRESS - E61 - E64 - E66 - E91 - E97 - E98
1	**1186723**	ø 73x57x8.5	---	FAEMA	COMPACT - DUE - EXPRESS - E61 - E64 - E66 - E91 - E97 - E98
1	**1186724**	ø 73x57x9	---	FAEMA	COMPACT - DUE - EXPRESS - E61 - E64 - E66 - E91 - E97 - E98
1	**1486724**	ø 73x57x10	---	FAEMA	COMPACT - DUE - EXPRESS - E61 - E64 - E66 - E91 - E97 - E98
2	**1186721**	ø 74x57.5x8	INT. CUTS - SPACCHI INT.	FAEMA 402199010	CARISMA - EMBLEMA - ENOVA - E61 - TEOREMA
2	**1186725**	ø 74x57.5x8.5	INT. CUTS - SPACCHI INT.	FAEMA	CARISMA - EMBLEMA - ENOVA - E61 - TEOREMA
2	**5028118**	ø 74x58x8	ORIGINAL / INT. CUTS - SPACCHI INT.	FAEMA 402199010	CARISMA - EMBLEMA - ENOVA - E61 - TEOREMA
3	**1186701**	ø 71x56x9	CONICAL	FAEMA 401261010	E98 COMPACT
3	**5032979**	ø 71x56x9	ORIGINAL / CONICAL	FAEMA 401261010	E98 COMPACT
4	**1486040**	ø 73x57x8.5	INT. CUTS - SPACCHI INT.	FAEMA	COMPACT - DUE - EXPRESS - E61 - E64 - E66 - E91 - E97 - E98

GUARNIZIONI PORTAFILTRO FAIMAC
FILTER HOLDER GASKETS FAIMAC
SIEBTRÄGERDICHTUNGEN FAIMAC
JUNTAS PORTAFILTRO FAIMAC

1

2 - SILICONE

Photo	LF Code	Dimensions (mm)	Notes	Suitable for	For machine model
1	**1186722**	ø 73x57x8	---	FAIMAC SOT001	---
1	**1186723**	ø 73x57x8.5	---	FAIMAC SOT001	---
1	**1186724**	ø 73x57x9	---	FAIMAC SOT001	---
1	**1486724**	ø 73x57x10	---	FAIMAC SOT001	---
2	**1486040**	ø 73x57x8.5	INT. CUTS - SPACCHI INT.	FAIMAC SOT001	---

GUARNIZIONI PORTAFILTRO FIAMMA RST
FILTER HOLDER GASKETS FIAMMA RST
SIEBTRÄGERDICHTUNGEN FIAMMA RST
JUNTAS PORTAFILTRO FIAMMA RST

1

Photo	LF Code	Dimensions (mm)	Notes	Suitable for	For machine model
1	**1186725**	ø 73x57x8.5	INT. CUTS - SPACCHI INT.	FIAMMA RST 5.0.025.0012	ATLANTIC - MARINA - MINIBAR - PRESTIGE

GUARNIZIONI PORTAFILTRO FIORENZATO CS
FILTER HOLDER GASKETS FIORENZATO CS
SIEBTRÄGERDICHTUNGEN FIORENZATO CS
JUNTAS PORTAFILTRO FIORENZATO CS

1

2

3

4 - SILICONE

Photo	LF Code	Dimensions (mm)	Notes	Suitable for	For machine model
1	**1186721**	ø 74x57.5x8	INT. CUTS - SPACCHI INT.	FIORENZATO A1200007	BRICOLETTA - COLOMBINA - DUCALE - FENICE - LIDO - VOLANTE
2	**1186722**	ø 73x57x8	---	FIORENZATO A1200007	BRICOLETTA - COLOMBINA - DUCALE - FENICE - LIDO - VOLANTE
2	**1186723**	ø 73x57x8.5	---	FIORENZATO A1200006	BRICOLETTA - COLOMBINA - DUCALE - FENICE - LIDO - VOLANTE
2	**1186724**	ø 73x57x9	---	FIORENZATO A1200005	BRICOLETTA - COLOMBINA - DUCALE - FENICE - LIDO - VOLANTE
2	**1486724**	ø 73x57x10	---	FIORENZATO A1200005	BRICOLETTA - COLOMBINA - DUCALE - FENICE - LIDO - VOLANTE
2	**1186622**	ø 72x56x8	---	FIORENZATO A1200181	VENEZIA
3	**1486026**	ø 65.5x55.5x5.5	---	FIORENZATO A1200194	PIAZZASANMARCO
3	**1186656**	ø 67x56x6	---	FIORENZATO A1200189	PIAZZASANMARCO
4	**1486040**	ø 73x57x8.5	INT. CUTS - SPACCHI INT.	FIORENZATO A1200006	BRICOLETTA - COLOMBINA - DUCALE - FENICE - LIDO - VOLANTE

GUARNIZIONI PORTAFILTRO FRACINO
FILTER HOLDER GASKETS FRACINO
SIEBTRÄGERDICHTUNGEN FRACINO
JUNTAS PORTAFILTRO FRACINO

1

2 - SILICONE

Photo	LF Code	Dimensions (mm)	Notes	Suitable for	For machine model
1	**1186722**	ø 73x57x8	---	FRACINO FC104	BAMBINO - CHERUB - HEAVENLY
1	**1186723**	ø 73x57x8.5	---	FRACINO FC104/8.5	BAMBINO - CHERUB - HEAVENLY
1	**1186724**	ø 73x57x9	---	FRACINO FC104/9	BAMBINO - CHERUB - HEAVENLY
1	**1486724**	ø 73x57x10	---	FRACINO	BAMBINO - CHERUB - HEAVENLY
2	**1486040**	ø 73x57x8.5	INT. CUTS - SPACCHI INT.	FRACINO FC104/8.5	BAMBINO - CHERUB - HEAVENLY

GUARNIZIONI PORTAFILTRO FUTURA
GASKETS FOR FILTER HOLDER FUTURA
DICHTUNGEN SIEBTRÄGER FUTURA
JUNTAS PORTAFILTRO FUTURA

1

2 - SILICONE

Photo	LF Code	Dimensions (mm)	Notes	Suitable for	For machine model
1	**1186722**	ø 73x57x8	---	FUTURA 200089	F100
1	**1186723**	ø 73x57x8.5	---	FUTURA 200090	F100
1	**1186724**	ø 73x57x9	---	FUTURA	F100
1	**1486724**	ø 73x57x10	---	FUTURA	F100
2	**1486040**	ø 73x57x8.5	INT. CUTS - SPACCHI INT.	FUTURA 200090	F100

GUARNIZIONI PORTAFILTRO FUTURMAT
FILTER HOLDER GASKETS FUTURMAT
SIEBTRÄGERDICHTUNGEN FUTURMAT
JUNTAS PORTAFILTRO FUTURMAT

1

2 - SILICONE

Photo	LF Code	Dimensions (mm)	Notes	Suitable for	For machine model
1	**1186722**	ø 73x57x8	---	FUTURMAT 01652809	ARIETE - CUSTOM - E61 - F3 - PALANCA - RIMINI
1	**1186723**	ø 73x57x8.5	---	FUTURMAT 01652809	ARIETE - CUSTOM - E61 - F3 - PALANCA - RIMINI
1	**1186724**	ø 73x57x9	---	FUTURMAT 01160400	ARIETE - CUSTOM - E61 - F3 - PALANCA - RIMINI
1	**1486724**	ø 73x57x10	---	FUTURMAT 01160400	ARIETE - CUSTOM - E61 - F3 - PALANCA - RIMINI
2	**1486040**	ø 73x57x8.5	INT. CUTS - SPACCHI INT.	FUTURMAT 01652809	ARIETE - CUSTOM - E61 - F3 - PALANCA - RIMINI

GUARNIZIONI PORTAFILTRO GAGGIA
FILTER HOLDER GASKETS GAGGIA
SIEBTRÄGERDICHTUNGEN GAGGIA
JUNTAS PORTAFILTRO GAGGIA

1

2

3

4

5

Photo	LF Code	Dimensions (mm)	Notes	Suitable for	For machine model
1	**1186676**	ø 72x56x8.5	EXT. CUTS - SPACCHI EST.	GAGGIA WGANG01/001/B	DECO - D90 - E90 - FD2000 - FE2000 - GD - GE - XD - XE
1	**1486041**	ø 72x56x8.5	ORIGINAL / EXT. CUTS - SPACCHI EST.	GAGGIA WGANG01/001/B	DECO - D90 - E90 - FD2000 - FE2000 - GD - GE - XD - XE
2	**1186741**	ø 72x56x8.5	---	GAGGIA	DECO - D90 - E90 - FD2000 - FE2000 - GD - GE - XD - XE
2	**1786216**	ø 72x57x8.5	---	GAGGIA NG01/001	ACHILLE - BABY - BABY86 - BABY89 - CAREZZA - CLASSIC
2	**1486006**	ø 73.5x57x5	---	GAGGIA GG0026/01	CUBIKA - GRANGAGGIA - VIVAGAGGIA
3	**1486003**	ø 79x56x6.5	---	GAGGIA 11004543	NEWESPRESSO06
4	**1186998**	ø 66x36x16	---	GAGGIA 145841500	CAREZZA DELUXE - GRAN GAGGIA
5	**5027216**	ø 55	---	GAGGIA 145849762	CAREZZA NEW - GRAN GAGGIA

GUARNIZIONI PORTAFILTRO GAGGIA SPAGNA
FILTER HOLDER GASKETS GAGGIA SPAGNA
SIEBTRÄGERDICHTUNGEN GAGGIA SPAGNA
JUNTAS PORTAFILTRO GAGGIA SPAGNA

1

2 - SILICONE

Photo	LF Code	Dimensions (mm)	Notes	Suitable for	For machine model
1	**1186722**	ø 73x57x8	---	GAGGIA SPAGNA 01652809	BELLA - G6 - KB - NERA - PALANCA
1	**1186723**	ø 73x57x8.5	---	GAGGIA SPAGNA 01652809	BELLA - G6 - KB - NERA - PALANCA
1	**1186724**	ø 73x57x9	---	GAGGIA SPAGNA 01160400	BELLA - G6 - KB - NERA - PALANCA
1	**1486724**	ø 73x57x10	---	GAGGIA SPAGNA 01160400	BELLA - G6 - KB - NERA - PALANCA
2	**1486040**	ø 73x57x8.5	INT. CUTS - SPACCHI INT.	GAGGIA SPAGNA 01652809	BELLA - G6 - KB - NERA - PALANCA

GUARNIZIONI PORTAFILTRO GRIMAC
FILTER HOLDER GASKETS GRIMAC
SIEBTRÄGERDICHTUNGEN GRIMAC
JUNTAS PORTAFILTRO GRIMAC

1

2 - SILICONE

Photo	LF Code	Dimensions (mm)	Notes	Suitable for	For machine model
1	**1186722**	ø 73x57x8	---	GRIMAC 1110600015/F015	ECLISSE - G10 - LAUNO - MIA - TEN - TWENTY - ZOLAI - ZOLAII
1	**1186723**	ø 73x57x8.5	---	GRIMAC 1110600016/F016	ECLISSE - G10 - LAUNO - MIA - TEN - TWENTY - ZOLAI - ZOLAII
1	**1186724**	ø 73x57x9	---	GRIMAC 1110600017	ECLISSE - G10 - LAUNO - MIA - TEN - TWENTY - ZOLAI - ZOLAII
1	**1486724**	ø 73x57x10	---	GRIMAC	ECLISSE - G10 - LAUNO - MIA - TEN - TWENTY - ZOLAI - ZOLAII
1	**1186891**	ø 73x57x8	75 SH	GRIMAC 1110600035	ECLISSE - G10 - LAUNO - MIA - TEN - TWENTY - ZOLAI - ZOLAII
1	**1186622**	ø 72x56x8	---	GRIMAC A1200181	G11
2	**1486040**	ø 73x57x8.5	INT. CUTS - SPACCHI INT.	GRIMAC 1110600016/F016	ECLISSE - G10 - LAUNO - MIA - TEN - TWENTY - ZOLAI - ZOLAII

GUARNIZIONI PORTAFILTRO ISOMAC
FILTER HOLDER GASKETS ISOMAC
SIEBTRÄGERDICHTUNGEN ISOMAC
JUNTAS PORTAFILTRO ISOMAC

1

2

3

Photo	LF Code	Dimensions (mm)	Notes	Suitable for	For machine model
1	**1186725**	ø 73x57x8.5	INT. CUTS - SPACCHI INT.	ISOMAC IS000411	ALBA - MILLENNIUM - MONDIALE - TEA - ZAFFIRO
2	**1186722**	ø 73x57x8	---	ISOMAC IS351030	VENUS
3	**5058168**	ø 71x54x4.5	---	ISOMAC IS000807	MAVERICK
3	**5061480**	ø 68x48x5	---	ISOMAC IS000331	GIADA

GUARNIZIONI PORTAFILTRO ITALCREM
FILTER HOLDER GASKETS ITALCREM
SIEBTRÄGERDICHTUNGEN ITALCREM
JUNTAS PORTAFILTRO ITALCREM

1

2 - SILICONE

Photo	LF Code	Dimensions (mm)	Notes	Suitable for	For machine model
1	**1186722**	ø 73x57x8	---	ITALCREM 01652809	CAPRI - IT4 - PALANCA
1	**1186723**	ø 73x57x8.5	---	ITALCREM 01652809	CAPRI - IT4 - PALANCA
1	**1186724**	ø 73x57x9	---	ITALCREM 01160400	CAPRI - IT4 - PALANCA
1	**1486724**	ø 73x57x10	---	ITALCREM 01160400	CAPRI - IT4 - PALANCA
2	**1486040**	ø 73x57x8.5	INT. CUTS - SPACCHI INT.	ITALCREM 01652809	CAPRI - IT4 - PALANCA

GUARNIZIONI PORTAFILTRO KRUPS
FILTER HOLDER GASKETS KRUPS
SIEBTRÄGERDICHTUNGEN KRUPS
JUNTAS PORTAFILTRO KRUPS

1

Photo	LF Code	Dimensions (mm)	Notes	Suitable for	For machine model
1	**5056038**	ø 58x42x7	ORIGINAL	KRUPS MS-620342	XP2010 - XP2070 - KRUPS XP4000 - XP4030 - XP403050/3CO - XP4050

GUARNIZIONI PORTAFILTRO LAVAZZA
FILTER HOLDER GASKETS LAVAZZA
SIEBTRÄGERDICHTUNGEN LAVAZZA
JUNTAS PORTAFILTRO LAVAZZA

1

2

3

4

5 - SILICONE

Photo	LF Code	Dimensions (mm)	Notes	Suitable for	For machine model
1	**5049383**	ø 73x57x8	ORIGINAL / INT. CUTS - SPACCHI INT.	LAVAZZA 10066139	LB4100 - LB4103 - LB4700 - LB4700R - LB4701R
2	**5048451**	ø 73x57x8.5	ORIGINAL / INT. CUTS - SPACCHI INT.	LAVAZZA 10066852	LB4100 - LB4103 - LB4700
3	**1186723**	ø 73x57x8.5	---	LAVAZZA 10084239	LB4600
4	**1486004**	ø 38x24x5	ORIGINAL	LAVAZZA 10064390	EP850
5	**1486040**	ø 73x57x8.5	INT. CUTS - SPACCHI INT.	LAVAZZA 10066852	LB4100 - LB4103 - LB4700

GUARNIZIONI PORTAFILTRO MAGISTER
FILTER HOLDER GASKETS MAGISTER
SIEBTRÄGERDICHTUNGEN MAGISTER
JUNTAS PORTAFILTRO MAGISTER

1

Photo	LF Code	Dimensions (mm)	Notes	Suitable for	For machine model
1	**1186721**	ø 74x57.5x8	INT. CUTS - SPACCHI INT.	MAGISTER 190003	---

GUARNIZIONI PORTAFILTRO MAIRALI
FILTER HOLDER GASKETS MAIRALI
SIEBTRÄGERDICHTUNGEN MAIRALI
JUNTAS PORTAFILTRO MAIRALI

1

2 - SILICONE

Photo	LF Code	Dimensions (mm)	Notes	Suitable for	For machine model
1	**1186722**	ø 73x57x8	---	MAIRALI 01652809	ARIANNE - GIULIETTA - PALANCA
1	**1186723**	ø 73x57x8.5	---	MAIRALI 01652809	ARIANNE - GIULIETTA - PALANCA
1	**1186724**	ø 73x57x9	---	MAIRALI 01160400	ARIANNE - GIULIETTA - PALANCA
1	**1486724**	ø 73x57x10	---	MAIRALI 01160400	ARIANNE - GIULIETTA - PALANCA
2	**1486040**	ø 73x57x8.5	INT. CUTS - SPACCHI INT.	MAIRALI 01652809	ARIANNE - GIULIETTA - PALANCA

GUARNIZIONI PORTAFILTRO MARCFI-ANCAS
FILTER HOLDER GASKETS MARCFI-ANCAS
SIEBTRÄGERDICHTUNGEN MARCFI-ANCAS
JUNTAS PORTAFILTRO MARCFI-ANCAS

1

2

Photo	LF Code	Dimensions (mm)	Notes	Suitable for	For machine model
1	**1186753**	ø 73x59x7	EXT. CUTS - SPACCHI EST.	MARCFI-ANCAS	---
1	**1186181**	ø 73x59x7.5	EXT. CUTS - SPACCHI EST.	MARCFI-ANCAS E-107R	---
2	**1186883**	ø 73x59x8.5	---	MARCFI-ANCAS	---

GUARNIZIONI PORTAFILTRO MARZOCCO
FILTER HOLDER GASKETS MARZOCCO
SIEBTRÄGERDICHTUNGEN MARZOCCO
JUNTAS PORTAFILTRO MARZOCCO

1

2

3

4 - HNBR

5 - SILICONE

Photo	LF Code	Dimensions (mm)	Notes	Suitable for	For machine model
1	**1186764**	ø 72x55x6	EXT. CUTS - SPACCHI EST.	MARZOCCO L105/B6	FB70 - FB80 - GB5 - LINEA
1	**1186765**	ø 72x55x7	EXT. CUTS - SPACCHI EST.	MARZOCCO L105/B7	FB70 - FB80 - GB5 - LINEA
2	**1186760**	ø 72x55x6.1/8	EXT. CUTS - SPACCHI EST.	MARZOCCO L105/B8	FB70 - FB80 - GB5 - GS3 - LINEA - MISTRAL - STRADA
2	**1186761**	ø 72x55x7.1/9	EXT. CUTS - SPACCHI EST.	MARZOCCO L105/B9	FB70 - FB80 - GB5 - GS3 - LINEA - MISTRAL - STRADA
3	**1486001**	ø 72x55x6.1/8	EXT. CUTS - SPACCHI EST.	MARZOCCO L105/B8	FB70 - FB80 - GB5 - GS3 - LINEA - MISTRAL - STRADA
3	**1486005**	ø 72x55x7.1/9	EXT. CUTS - SPACCHI EST.	MARZOCCO L105/B9	FB70 - FB80 - GB5 - GS3 - LINEA - MISTRAL - STRADA
4	**5059357**	ø 72x55x6.1/8	EXT. CUTS - SPACCHI EST.	MARZOCCO L105/B8	FB70 - FB80 - GB5 - GS3 - LINEA - MISTRAL - STRADA
4	**5059358**	ø 72x55x7.1/9	EXT. CUTS - SPACCHI EST.	MARZOCCO L105/B9	FB70 - FB80 - GB5 - GS3 - LINEA - MISTRAL - STRADA
5	**1486042**	ø 72x55x6.1/8	EXT. CUTS - SPACCHI EST.	MARZOCCO L105/B8	FB70 - FB80 - GB5 - GS3 - LINEA - MISTRAL - STRADA

GUARNIZIONI PORTAFILTRO MCE
FILTER HOLDER GASKETS MCE
SIEBTRÄGERDICHTUNGEN MCE
JUNTAS PORTAFILTRO MCE

1

Photo	LF Code	Dimensions (mm)	Notes	Suitable for	For machine model
1	**1186894**	ø 73x57x8	INT. CUTS - SPACCHI INT.	MCE 12227	START
1	**5049383**	ø 73x57x8	ORIGINAL / INT. CUTS - SPACCHI INT.	MCE 12227	START
1	**1186895**	ø 73x57x8.5	INT. CUTS - SPACCHI INT.	MCE 12228	START
1	**5048451**	ø 73x57x8.5	ORIGINAL / INT. CUTS - SPACCHI INT.	MCE 12228	START

GUARNIZIONI PORTAFILTRO NUOVA SIMONELLI
FILTER HOLDER GASKETS NUOVA SIMONELLI
SIEBTRÄGERDICHTUNGEN NUOVA SIMONELLI
JUNTAS PORTAFILTRO NUOVA SIMONELLI

1

2

3

4

Photo	LF Code	Dimensions (mm)	Notes	Suitable for	For machine model
1	**1186400**	ø 71x56x8.2	CONICAL	NUOVA SIMONELLI 02280020.V	APPIA - APPIAII
1	**1186701**	ø 71x56x9	CONICAL	NUOVA SIMONELLI 40200004	AURELIA - AURELIA II - AURELIAII
1	**1186402**	ø 71x56x9	ORIGINAL / CONICAL	NUOVA SIMONELLI 40200004	AURELIA - AURELIA II - AURELIAII
2	**1186838**	ø 72x58x7	EXT. CUTS - SPACCHI EST.	NUOVA SIMONELLI 02280020	APPIA - MUSICA - OSCAR - MAC 2000 - MACCUP - PREMIER - PROGRAM VIP
2	**1486008**	ø 72x58x7	ORIGINAL / EXT. CUTS - SPACCHI EST.	NUOVA SIMONELLI 02280020	APPIA - MUSICA - OSCAR - MAC 2000 - MACCUP - PREMIER - PROGRAM VIP
3	**1186837**	ø 72x58x7	---	NUOVA SIMONELLI 02280020	MAC 2000 - MACCUP - OPTIMA - PREMIER - PROGRAM - PROGRAM VIP
3	**1186836**	ø 72x58x4.5	---	NUOVA SIMONELLI 02280025	BEACH - ELLI
4	**1786055**	ø 68x47.8x5	---	NUOVA SIMONELLI 02280006	MIA

GUARNIZIONI PORTAFILTRO ORCHESTRALE
FILTER HOLDER GASKETS ORCHESTRALE
SIEBTRÄGERDICHTUNGEN ORCHESTRALE
JUNTAS PORTAFILTRO ORCHESTRALE

1

Photo	LF Code	Dimensions (mm)	Notes	Suitable for	For machine model
1	**1186894**	ø 73x57x8	INT. CUTS - SPACCHI INT.	ORCHESTRALE D12227	ETNICA - PHONICA
1	**5049383**	ø 73x57x8	ORIGINAL / INT. CUTS - SPACCHI INT.	ORCHESTRALE D12227	ETNICA - PHONICA
1	**1186895**	ø 73x57x8.5	INT. CUTS - SPACCHI INT.	ORCHESTRALE D12228	ETNICA - PHONICA
1	**5048451**	ø 73x57x8.5	ORIGINAL / INT. CUTS - SPACCHI INT.	ORCHESTRALE D12228	ETNICA - PHONICA

GUARNIZIONI PORTAFILTRO PAVONI
FILTER HOLDER GASKETS PAVONI
SIEBTRÄGERDICHTUNGEN PAVONI
JUNTAS PORTAFILTRO PAVONI

1

2

3

4

5

6

Photo	LF Code	Dimensions (mm)	Notes	Suitable for	For machine model
1	**1186894**	ø 73x57x8	INT. CUTS - SPACCHI INT.	PAVONI 361014	BAR - BART - PUB
2	**1186722**	ø 73x57x8	---	PAVONI 361008	BAR - BART - PUB
2	**1486724**	ø 73x57x10	---	PAVONI	BAR - BART - PUB
2	**1186656**	ø 67x56x6	---	PAVONI 430072	P90
2	**5030078**	ø 71.5x54x4	---	PAVONI 0DMC047	DOMUSBARELETTRONICA - NEWDOMUSBAR
3	**1186465**	ø 60x50x5.5	---	PAVONI 361028	EUROPICCOLA - PROFESSIONAL - ROMANTICA - STRADIVARI
3	**5051838**	ø 60x50x5.5	---	PAVONI 2612005	EUROPICCOLA - PROFESSIONAL - ROMANTICA - STRADIVARI
4	**1486019**	ø 57.7x47x5.3	OR	PAVONI 465300	EUROPICCOLA - PROFESSIONAL
5	**1186998**	ø 66x36x16	---	PAVONI 0P145841500	ESPRESSOPLUS - ESPRESSOPLUSLUSSO - ESPRESSOSI - EUROBAR
6	**5027216**	ø 55	---	PAVONI 0P145849762	ESPRESSOINN - ESPRESSOSI

GUARNIZIONI PORTAFILTRO PROMAC
FILTER HOLDER GASKETS PROMAC
SIEBTRÄGERDICHTUNGEN PROMAC
JUNTAS PORTAFILTRO PROMAC

1

2

Photo	LF Code	Dimensions (mm)	Notes	Suitable for	For machine model
1	**1186812**	ø 72x57x8	EXT. CUTS - SPACCHI EST.	PROMAC 36301001	CLUB
1	**5048248**	ø 74x57.5x8.5	EXT. CUTS - SPACCHI EST.	PROMAC 36301046	CLUB
1	**1486032**	ø 74x57.5x8.5	ORIGINAL / EXT. CUTS - SPACCHI EST.	PROMAC 36301046	CLUB
2	**1186795**	ø 73.5x57.5x8	---	PROMAC 80230400	COMPACT - GREEN
2	**1486031**	ø 73.5x57.5x8	ORIGINAL	PROMAC 80230400	COMPACT - GREEN

GUARNIZIONI PORTAFILTRO QUICK MILL
FILTER HOLDER GASKETS QUICK MILL
SIEBTRÄGERDICHTUNGEN QUICK MILL
JUNTAS PORTAFILTRO QUICK MILL

1

2

3 - SILICONE

Photo	LF Code	Dimensions (mm)	Notes	Suitable for	For machine model
1	**1186722**	ø 73x57x8	---	QUICK MILL GO0970GS	0980 ANDREJA - 0995P VETRANO
1	**1186723**	ø 73x57x8.5	---	QUICK MILL GO066GS	0980 ANDREJA - 0995P VETRANO
1	**1186724**	ø 73x57x9	---	QUICK MILL	0980 ANDREJA - 0995P VETRANO
1	**1486724**	ø 73x57x10	---	QUICK MILL	0980 ANDREJA - 0995P VETRANO
2	**1486026**	ø 65.5x55.5x5.5	---	QUICK MILL GUASC001	0996 ACHILLE
3	**1486040**	ø 73x57x8.5	INT. CUTS - SPACCHI INT.	QUICK MILL GO066GS	0980 ANDREJA - 0995P VETRANO

GUARNIZIONI PORTAFILTRO RANCILIO
FILTER HOLDER GASKETS RANCILIO
SIEBTRÄGERDICHTUNGEN RANCILIO
JUNTAS PORTAFILTRO RANCILIO

1

Photo	LF Code	Dimensions (mm)	Notes	Suitable for	For machine model
1	**1186812**	ø 72x57x8	EXT. CUTS - SPACCHI EST.	RANCILIO 36301001	CLASSE10/9/8/7/6 - EPOCA - MILLENNIUM - S20 - Z11
1	**5048248**	ø 74x57.5x8.5	EXT. CUTS - SPACCHI EST.	RANCILIO 36301046	CLASSE10/9/8/7/6 - EPOCA
1	**1486032**	ø 74x57.5x8.5	ORIGINAL / EXT. CUTS - SPACCHI EST.	RANCILIO 36301046	CLASSE10/9/8/7/6 - EPOCA
1	**1186452**	ø 74x58x8.2	EXT. CUTS - SPACCHI EST.	RANCILIO 36301030	AUDREY - NANCY - SILVIA
1	**5012498**	ø 74x58x8.2	ORIGINAL / EXT. CUTS - SPACCHI EST.	RANCILIO 36301030	AUDREY - NANCY - SILVIA

GUARNIZIONI PORTAFILTRO RENEKA
FILTER HOLDER GASKETS RENEKA
SIEBTRÄGERDICHTUNGEN RENEKA
JUNTAS PORTAFILTRO RENEKA

1

2

3 - SILICONE

Photo	LF Code	Dimensions (mm)	Notes	Suitable for	For machine model
1	**1186726**	ø 74x56x9	---	RENEKA 9003203	BASIC - CONCEPT - LC - LIFE - PLUS - PRESTIGE - VIVA - VIVAS
2	**1786062**	ø 72x56x8	INT. CUTS - SPACCHI INT.	RENEKA 9101145	MOSAIC - OEM
1	**1186722**	ø 73x57x8	---	RENEKA AT5493039	AMICI - ATALANTE
1	**1186723**	ø 73x57x8.5	---	RENEKA	AMICI - ATALANTE
1	**1186724**	ø 73x57x9	---	RENEKA	AMICI - ATALANTE
1	**1486724**	ø 73x57x10	---	RENEKA	AMICI - ATALANTE
3	**1486040**	ø 73x57x8.5	INT. CUTS - SPACCHI INT.	RENEKA	AMICI - ATALANTE

GUARNIZIONI PORTAFILTRO ROYAL
FILTER HOLDER GASKETS ROYAL
SIEBTRÄGERDICHTUNGEN ROYAL
JUNTAS PORTAFILTRO ROYAL

1

2

Photo	LF Code	Dimensions (mm)	Notes	Suitable for	For machine model
1	**1186891**	ø 73x57x8	---	ROYAL 0520090	DIADEMA - SYNCHRO
2	**1486026**	ø 65,5x55,5x5,5	---	ROYAL 0530200	VALLELUNGA LEVA

GUARNIZIONI PORTAFILTRO SAB ITALIA
FILTER HOLDER GASKETS SAB ITALIA
SIEBTRÄGERDICHTUNGEN SAB ITALIA
JUNTAS PORTAFILTRO SAB ITALIA

1

Photo	LF Code	Dimensions (mm)	Notes	Suitable for	For machine model
1	**1786054**	ø 73x57x7.5	INT. CUTS - SPACCHI INT.	SAB ITALIA SVTMS028	ELLIPSE - E96 - MODERNA
1	**1186894**	ø 73x57x7	INT. CUTS - SPACCHI INT.	SAB ITALIA SVTMS024	ELLIPSE - E96 - JOLLY - MODERNA

GUARNIZIONI PORTAFILTRO SAECO
FILTER HOLDER GASKETS SAECO
SIEBTRÄGERDICHTUNGEN SAECO
JUNTAS PORTAFILTRO SAECO

1

2

3

4

5

6

Photo	LF Code	Dimensions (mm)	Notes	Suitable for	For machine model
1	**1186676**	ø 72x56x8.5	EXT. CUTS - SPACCHI EST.	SAECO WGANG01/001/B	AROMA
1	**1486041**	ø 72x56x8.5	ORIGINAL / EXT. CUTS - SPACCHI EST.	SAECO WGANG01/001/B	AROMA
2	**1486003**	ø 79x56x6.5	---	SAECO 11004543	SIRENA
3	**1786055**	ø 68x47.8x5	---	SAECO 145840561	AROMA - MAGIC - RIOVAPORE - VIAVENEZIA
4	**1186998**	ø 66x36x16	---	SAECO 145841500	ARMONIA - AROMA - GRANCREMA - IDEA - MAGICCAPPUCCINO - VIAVENEZIA
5	**5021655**	ø 66x35x17	---	SAECO 145845462	ARMONIA EASY - GRAN CREMA DELUXE - MAGIC COMBI - VIA VENETO
6	**5027216**	ø 55	---	SAECO 145849762	ARMONIA - AROMA - GRANCREMA - IDEA - MAGISESPRESSO - VIAVENETO

GUARNIZIONI PORTAFILTRO SAN MARCO
FILTER HOLDER GASKETS SAN MARCO
SIEBTRÄGERDICHTUNGEN SAN MARCO
JUNTAS PORTAFILTRO SAN MARCO

1

Photo	LF Code	Dimensions (mm)	Notes	Suitable for	For machine model
1	**1186851**	ø 64x52.5x5.5	EXT. CUTS - SPACCHI EST.	SAN MARCO 109011	LEVA - 100 - 105 - 105 NEW - 85 - 95
1	**1186786**	ø 64x52.5x5.5	ORIGINAL / EXT. CUTS - SPACCHI EST.	SAN MARCO 109130	LEVA - 100 - 105 - 105 NEW - 85 - 95

GUARNIZIONI PORTAFILTRO SANREMO
FILTER HOLDER GASKETS SANREMO
SIEBTRÄGERDICHTUNGEN SANREMO
JUNTAS PORTAFILTRO SANREMO

1

2

3

4 - SILICONE

Photo	LF Code	Dimensions (mm)	Notes	Suitable for	For machine model
1	**1786051**	ø 73x57x8	EXT. CUTS - SPACCHI EST.	SANREMO 10502038	CAPRI - MONTECARLO - VENEZIA
1	**1486046**	ø 73x57x8	ORIGINAL/EXT. CUTS - SPACCHI EST.	SANREMO 10502038	CAPRI - MONTECARLO - VENEZIA
2	**1186722**	ø 73x57x8	---	SANREMO 10502110	AMALFI - CAPRI - MILANO LX - PISA - TORINO - TREVISO - VERONA - ZOE
2	**1486044**	ø 73x57x8	ORIGINAL	SANREMO 10502110	AMALFI - CAPRI - MILANO LX - PISA - TORINO - TREVISO - VERONA - ZOE
2	**1186723**	ø 73x57x8.5	---	SANREMO 10502032	TREVISO - TREVISOLX
2	**1486045**	ø 73x57x8.5	ORIGINAL	SANREMO 10502032	TREVISO - TREVISOLX
2	**1186724**	ø 73x57x9	---	SANREMO	TREVISO - TREVISOLX

GUARNIZIONI PORTAFILTRO SCALA
FILTER HOLDER GASKETS SCALA
SIEBTRÄGERDICHTUNGEN SCALA
JUNTAS PORTAFILTRO SCALA

1

2 - SILICONE

Photo	LF Code	Dimensions (mm)	Notes	Suitable for	For machine model
1	**1186722**	ø 73x57x8	---	SCALA C-0321	BUTTERFLY - CARMEN - EROICA - IRIS - NORMA
1	**1186723**	ø 73x57x8.5	---	SCALA C-0321	BUTTERFLY - CARMEN - EROICA - IRIS - NORMA
1	**1186724**	ø 73x57x9	---	SCALA C-0321	BUTTERFLY - CARMEN - EROICA - IRIS - NORMA
1	**1486724**	ø 73x57x10	---	SCALA C-0321	BUTTERFLY - CARMEN - EROICA - IRIS - NORMA
2	**1486040**	ø 73x57x8.5	INT. CUTS - SPACCHI INT.	SCALA C-0321	BUTTERFLY - CARMEN - EROICA - IRIS - NORMA

GUARNIZIONI PORTAFILTRO SPAZIALE
FILTER HOLDER GASKETS SPAZIALE
SIEBTRÄGERDICHTUNGEN SPAZIALE
JUNTAS PORTAFILTRO SPAZIALE

1

2

Photo	LF Code	Dimensions (mm)	Notes	Suitable for	For machine model
1	**1186727**	ø 64x52x6.3	ORIGINAL / EXT. CUTS - SPACCHI EST.	SPAZIALE 01939	NEW - PROFESSIONALE - SPAZIO - S1 - S3 - S40 - S5 - S5 COMPACT
2	**1186871**	ø 63x52x6.5	---	SPAZIALE 01939	NEW - PROFESSIONALE - SPAZIO - S1 - S3 - S40 - S5 - S5 COMPACT
2	**5026183**	ø 64x52x7	ORIGINAL	SPAZIALE 01968	NEW - PROFESSIONALE - SPAZIO - S1 - S3 - S40 - S5 - S5 COMPACT
2	**1186719**	ø 64x52x7	---	SPAZIALE 01968	NEW - PROFESSIONALE - SPAZIO - S1 - S3 - S40 - S5 - S5 COMPACT

GUARNIZIONI PORTAFILTRO UNIC
FILTER HOLDER GASKETS UNIC
SIEBTRÄGERDICHTUNGEN UNIC
JUNTAS PORTAFILTRO UNIC

1

Photo	LF Code	Dimensions (mm)	Notes	Suitable for	For machine model
1	**1186896**	ø 74x57x9	---	UNIC PC-17	---
1	**1186897**	ø 74x57x10	---	UNIC PC-17	---

GUARNIZIONI PORTAFILTRO VFA
FILTER HOLDER GASKETS VFA
SIEBTRÄGERDICHTUNGEN VFA
JUNTAS PORTAFILTRO VFA

1

2 - SILICONE

Photo	LF Code	Dimensions (mm)	Notes	Suitable for	For machine model
1	**1186722**	ø 73x57x8	---	VFA	ELITE - MAGESTIC - SPLENDOR
1	**1186723**	ø 73x57x8.5	---	VFA	ELITE - MAGESTIC - SPLENDOR
1	**1186724**	ø 73x57x9	---	VFA	ELITE - MAGESTIC - SPLENDOR
1	**1486724**	ø 73x57x10	---	VFA	ELITE - MAGESTIC - SPLENDOR
2	**1486040**	ø 73x57x8.5	INT. CUTS - SPACCHI INT.	VFA	ELITE - MAGESTIC - SPLENDOR

GUARNIZIONI PORTAFILTRO VIBIEMME
FILTER HOLDER GASKETS VIBIEMME
SIEBTRÄGERDICHTUNGEN VIBIEMME
JUNTAS PORTAFILTRO VIBIEMME

1

2

3

4 - SILICONE

Photo	LF Code	Dimensions (mm)	Notes	Suitable for	For machine model
1	**1186722**	ø 73x57x8	---	VIBIEMME GUARSOT	CHIMAERA - DOSAPLUS - EVOLUTION - MERCURY - REPLICA - REVOLUTION
1	**1186723**	ø 73x57x8.5	---	VIBIEMME	CHIMAERA - DOSAPLUS - EVOLUTION - MERCURY - REPLICA - REVOLUTION
1	**1186724**	ø 73x57x9	---	VIBIEMME	CHIMAERA - DOSAPLUS - EVOLUTION - MERCURY - REPLICA - REVOLUTION
1	**1486724**	ø 73x57x10	---	VIBIEMME	CHIMAERA - DOSAPLUS - EVOLUTION - MERCURY - REPLICA - REVOLUTION
2	**1186721**	ø 74x57.5x8	INT. CUTS - SPACCHI INT.	VIBIEMME	CHIMAERA - DOSAPLUS - EVOLUTION - MERCURY - REPLICA - REVOLUTION
3	**1486026**	ø 65.5x55.5x5.5	---	VIBIEMME GUARSOTPISTON	REPLICA AL
4	**1486040**	ø 73x57x8.5	INT. CUTS - SPACCHI INT.	VIBIEMME	CHIMAERA - DOSAPLUS - EVOLUTION - MERCURY - REPLICA - REVOLUTION

GUARNIZIONI PORTAFILTRO VICTORIA ARDUINO
FILTER HOLDER GASKETS VICTORIA ARDUINO
SIEBTRÄGERDICHTUNGEN VICTORIA ARDUINO
JUNTAS PORTAFILTRO VICTORIA ARDUINO

1 2 3

Photo	LF Code	Dimensions (mm)	Notes	Suitable for	For machine model
1	**1186701**	ø 71x56x9	CONICAL	VICTORIA ARDUINO 40200004	ADONIS - ATHENA - VENUSBAR - VENUSCENTURY
1	**1186402**	ø 71x56x9	ORIGINAL / CONICAL	VICTORIA ARDUINO 40200004	ADONIS - ATHENA - VENUSBAR - VENUSCENTURY
2	**1186838**	ø 72x57x7	EXT. CUTS - SPACCHI EST.	VICTORIA ARDUINO 02280020.C	VENUS FAMILY
2	**1486008**	ø 72x58x7	ORIGINAL - EXT. CUTS - SPACCHI EST.	VICTORIA ARDUINO 02280020.C	VENUS FAMILY
3	**1186656**	ø 67x56x6	---	VICTORIA ARDUINO 17000023	ATHENALEVA

GUARNIZIONI PORTAFILTRO VISACREM
FILTER HOLDER GASKETS VISACREM
SIEBTRÄGERDICHTUNGEN VISACREM
JUNTAS PORTAFILTRO VISACREM

1 2 - SILICONE

Photo	LF Code	Dimensions (mm)	Notes	Suitable for	For machine model
1	**1186722**	ø 73x57x8	---	VISACREM 01652809	BRAVA - NERA - PALANCA - V6
1	**1186723**	ø 73x57x8.5	---	VISACREM 01652809	BRAVA - NERA - PALANCA - V6
1	**1186724**	ø 73x57x9	---	VISACREM 01160400	BRAVA - NERA - PALANCA - V6
1	**1486724**	ø 73x57x10	---	VISACREM 01160400	BRAVA - NERA - PALANCA - V6
2	**1486040**	ø 73x57x8.5	INT. CUTS - SPACCHI INT.	VISACREM 01652809	BRAVA - NERA - PALANCA - V6

GUARNIZIONI PORTAFILTRO WEGA
FILTER HOLDER GASKETS WEGA
SIEBTRÄGERDICHTUNGEN WEGA
JUNTAS PORTAFILTRO WEGA

1 2 3 4 5

Photo	LF Code	Dimensions (mm)	Notes	Suitable for	For machine model
1	**1486009**	ø 53x42x8	ORIGINAL	WEGA WY12653001	STARLET
2	**1786056**	ø 64x52x6.3	INT. CUTS - SPACCHI INT.	WEGA WY12217001	CONCEPT52
2	**5047859**	ø 64x52x7	INT. CUTS - SPACCHI INT.	WEGA WY12217002	CONCEPT52
2	**5035642**	ø 64x52x6.3	ORIGINAL / INT. CUTS - SPACCHI INT.	WEGA WY12217001	CONCEPT52
2	**1486043**	ø 64x52x7	ORIGINAL / INT. CUTS - SPACCHI INT.	WEGA WY12217002	CONCEPT52

Photo	LF Code	Dimensions (mm)	Notes	Suitable for	For machine model
3	**1186650**	ø 67x56x5.5	ORIGINAL	WEGA WY12216	ALE
3	**1186656**	ø 67x56x6	---	WEGA WY12219	ALE
4	**1186622**	ø 71x56x8	---	WEGA	VENUS
5	**1786062**	ø 72x56x8	ORIGINAL / INT. CUTS - SPACCHI INT.	WEGA WY12217	CONCEPT56
5	**1186678**	ø 72x56x8.5	ORIGINAL / INT. CUTS - SPACCHI INT.	WEGA WY12215	CONCEPT56
5	**1486030**	ø 72x56x8	INT. CUTS - SPACCHI INT.	WEGA WY12217	CONCEPT56
5	**1486029**	ø 72x56x8.5	INT. CUTS - SPACCHI INT.	WEGA WY12215	CONCEPT56
5	**5049383**	ø 73.5x57.5x8	ORIGINAL / INT. CUTS - SPACCHI INT.	WEGA WY12227	STANDARD
4	**1186891**	ø 73x57x8	75SH	WEGA W10321	STANDARD
4	**1186892**	ø 73x57x8.5	75SH	WEGA W10323	STANDARD
4	**1186893**	ø 73x57x9	75SH	WEGA W10322	STANDARD
5	**1186894**	ø 73x57x8	75SH / INT. CUTS - SPACCHI INT.	WEGA W10321	STANDARD
5	**1186895**	ø 73x57x8.5	75SH / INT. CUTS - SPACCHI INT.	WEGA WY12228	STANDARD
5	**5048451**	ø 73x57x8.5	ORIGINAL / INT. CUTS - SPACCHI INT.	WEGA WY12228	STANDARD

GUARNIZIONI PORTAFILTRO ZACCONI
GASKETS FOR FILTER HOLDER ZACCONI
DICHTUNGEN SIEBTRÄGER ZACCONI
JUNTAS PORTAFILTRO ZACCONI

1

Photo	LF Code	Dimensions (mm)	Notes	Suitable for	For machine model
1	**1486034**	ø 59x47x6,0 mm	---	ZACCONI 55	ESPRESSO BABY - RIVIERA

SPESSORI
SPACERS
DICKEN
ESPESORES

1

2

3

Photo	LF Code	Dimensions (mm)	Material
1	**1190101**	ø 64x53x0.7	PAPER/CARTA
1	**1190021**	ø 66x58x0.8	PAPER/CARTA
1	**1190006**	ø 69x57x0.8	PAPER/CARTA
1	**1190005**	ø 70x57x0.5	PAPER/CARTA
1	**1190051**	ø 70x57x0.8	PAPER/CARTA
1	**1190011**	ø 72x58x0.8	PAPER/CARTA
1	**1190001**	ø 73x59x0.8	PAPER/CARTA
2	**1190007**	ø 64x53x1.0	EPDM
2	**1190003**	ø 70x57x1.0	EPDM
2	**1190002**	ø 73x59x1.0	EPDM
3	**1190004**	ø 71x58x0.6	PAPER/VITON

VETRI LIVELLO A TUBO
TUBE LEVEL GLASS
SCHLAUCH-NIVEAUGLAS
CRISTAL NIVEL DE TUBO

1 - Glass Neutral

2 - Glass Red Line

3 - Glass Blue Line

4 - Glass Min/Max

5 - Glass Min/Max

6 - PTFE

Photo	LF Code	Dimensions (mm)	Suitable for
1	**1520007**	ø 9x132	GAGGIA S453101 - PAVONI 453101
1	**1520005**	ø 9x147	ELEKTRA 00141035
1	**1520562**	ø 11x107	QUALITY ESPRESSO 08181703
1	**1520541**	ø 11x119	MAIRALI
1	**1520506**	ø 11x170	ASTORIA/CMA 21300 - MCE 21300 - LAVAZZA 10066336 - WEGA WY21300
1	**1520576**	ø 11x184	CONTI 4500
1	**1520518**	ø 12x112	NUOVA SIMONELLI 09000009 - VICTORIA ARDUINO 09000009
1	**1520526**	ø 12x117	CIMBALI 439-034-000
1	**1520532**	ø 12x135	CARIMALI 62.00006 - FAEMA 4861117546
1	**1520561**	ø 12x140	RANCILIO 41010010
1	**1520501**	ø 12x175	BRUGNETTI/AURORA 000319 - FAEMA - QUALITY ESPRESSO
1	**1520543**	ø 13x210	MARCFI-ANCAS
1	**1520001**	ø 15x115	SAN MARCO 206910
2	**1201061**	ø 10x120	BEZZERA 5430505
2	**1201051**	ø 10x190	VICTORIA ARDUINO 40900002
2	**1520004**	ø 11x55	GAGGIA LV0536
2	**1201053**	ø 11x95	GAGGIA LV0541
2	**1201060**	ø 11x140	FRACINO FC181
2	**1520580**	ø 11x145	CONTI
2	**1520006**	ø 11x154	ASTORIA/CMA 21300001 - SCALA C-0260
2	**5025546**	ø 11x160	GAGGIA
2	**1520511**	ø 11x170	ASTORIA/CMA 56001 - FIORENZATO A1400008 - WEGA WY56001
2	**1520400**	ø 12x106	GAGGIA WGA4001060000 - LAVAZZA 10061885 - PAVONI 453110 - SAECO
2	**1520556**	ø 12x115	FAEMA - PAVONI 453100
2	**1520516**	ø 12x135	CIMBALI - NUOVA SIMONELLI 09000010
2	**1520542**	ø 13x114	MARCFI-ANCAS
2	**1520008**	ø 13x125	MARCFI-ANCAS BL-5131
2	**1201024**	ø 13x138	AZKOYEN
2	**1520566**	ø 30x110	SAN MARCO 104002
3	**1201054**	ø 11x140	BIANCHI 05256515 - LAVAZZA 10084138
3	**1201062**	ø 9x145	ZACCONI 8
4	**1201063**	ø 10x135	BEZZERA 5430504
4	**1520522**	ø 11x135	BRASILIA 00787.0.00.02
4	**1520100**	ø 11x140	GAGGIA LV0524 - GRIMAC GR270 - SANREMO 10402100
4	**1520546**	ø 11x140	BFC/ROYAL 4580010 - EXPOBAR 35902000 - VIBIEMME MATECVELI140
5	**1520572**	ø 11x150	ECM
5	**1520571**	ø 11x150	SPAZIALE 00268
5	**1520572**	ø 11x150	SPAZIALE 00267
5	**1520534**	ø 12x106	FAEMA 4861117546
5	**1201058**	ø 11x135	FIAMMA 5.0.000.1017
6	**1449877**	ø 10x107	RANCILIO 38228066 - PROMAC 38228066
6	**1201064**	ø 10x120	BFC 4010200 - ROYAL 4010200

INDICATORI DI LIVELLO COMPLETI
COMPLETE LEVEL INDICATORS
NIVEAUANZEIGER KOMPLETT
INDICADORES DE NIVEL COMPLETOS

1

2

3

Photo	LF Code	Suitable for
1	**1201005**	CIMBALI 990-716-000 - FAEMA 990716000
2	**1201052**	CIMBALI 913-723-030
3	**1201009**	CIMBALI 439-057-007 - FAEMA 439057007 - FUTURA 200170 - SCALA C-0092

INDICATORI DI LIVELLO COMPLETI
LEVEL INDICATORS COMPLETE
NIVEAUANZEIGER KOMPLETT
INDICADORES NIVEL COMPLETOS

1

2

3

4

5

Photo	LF Code	Suitable for
1	**5024205**	FUTURMAT 08181604
2	**1201010**	PROMAC 10060380 - RANCILIO 10060380
3	**1201001**	BRASILIA 21161.8.00.09 - FIAMMA 5.0.000.1020
4	**1201100**	NUOVA SIMONELLI 75010001 - VICTORIA ARDUINO 75010001
5	**1201501**	MARZOCCO L120C

VETRI LIVELLO PIATTI
DISH LEVEL GLASSES
NIVEAUGLÄSER TELLER
CRISTALES NIVEL PLATOS

1 - Plexiglass

2 - Plexiglass

3 - Glass

4 - Glass

5 - Glass

Photo	LF Code	Dimensions (mm)	Suitable for
1	**1520538**	89x30	CIMBALI 4831-130-683 - FAEMA 4831130683 - FUTURA 200049 - SCALA C-0192
2	**1520638**	89x30	CIMBALI 4831-130-683 - FAEMA 4831130683
3	**1520537**	89x30	CIMBALI - FAEMA 4861116572 - FUTURA 200049 - SCALA C-0192
4	**1201049**	72x22	CIMBALI 440-016-050
5	**1520357**	ø 61.5x5	MARZOCCO L122
5	**1520150**	ø 73x8	ELEKTRA 00544035

GUARNIZIONI PER VETRO LIVELLO
LEVEL GLASS GASKETS
DICHTUNGEN FÜR NIVEAUGLAS
JUNTAS PARA CRISTAL NIVEL

1

2

3

4

Photo	LF Code	Suitable for
1	**1186733**	SPAZIALE
2	**1186211**	BEZZERA
3	**1186226**	CIMBALI - GAGGIA - LAVAZZA - PAVONI - SAECO - SPAZIALE
4	**1186257**	SAN MARCO

GUARNIZIONI PER VETRO LIVELLO
LEVEL GLASS GASKETS
DICHTUNGEN FÜR NIVEAUGLAS
JUNTAS PARA CRISTAL NIVEL

1

2

3

4

5

6

Photo	LF Code	Dimensions (mm)	Suitable for
1	**1186173**	ø 16.5x10x12.5	MARCFI-ANCAS
1	**1186221**	ø 19x11.5x10	CARIMALI - CONTI - NUOVA SIMONELLI
2	**1186270**	ø 18x11x4	CONTI
2	**1186227**	ø 21x11.5x5	BRUGNETTI/AURORA - FAEMA - FUTURMAT
2	**1186251**	ø 18x12x3	RANCILIO
2	**1186360**	ø 18x12x2	CIMBALI
3	**1401002**	ø 14.5x10x7	BEZZERA
4	**1186206**	ø 16x10x8	ASTORIA/CMA - BFC - GRIMAC - LAVAZZA - NUOVA SIMONELLI - ROYAL
5	**1186375**	ø 15x9x8	ELEKTRA
5	**1186469**	ø 15x9x5	GAGGIA - PAVONI - ZACCONI
6	**1186498**	ø 14.5x11x2	EXPOBAR
6	**1186256**	ø 31x19x3	SAN MARCO

GUARNIZIONI PER VETRO LIVELLO
LEVEL GLASS GASKETS
DICHTUNGEN FÜR NIVEAUGLAS
JUNTAS PARA CRISTAL NIVEL

1 2 3 4 5 6

Photo	LF Code	Dimensions (mm)	Suitable for
1	**1527541**	---	CIMBALI - FAEMA - FUTURA - SCALA
2	**1186228**	90x31x1	CIMBALI - FAEMA - FUTURA
3	**1186230**	67.4x60x3.5 EPDM	CIMBALI - FAEMA
3	**1786011**	67.4x60x3.5 VITON	CIMBALI - FAEMA
4	**1186991**	72x22x3	CIMBALI
5	**1186242**	62x55x1	MARZOCCO
6	**1186932**	70x59.5x5.5	ELEKTRA

GUARNIZIONI PER VETRO LIVELLO
GASKETS FOR LEVEL GLASS
DICHTUNGEN FÜR NIVEAUGLAS
JUNTAS PARA CRISTAL NIVEL

1 2 3 4 5 6

Photo	LF Code	Dimensions (mm)	Suitable for
1	**1186803**	12.7x9.2x1.7	RANCILIO - PROMAC
2	**1186626**	14.5x11x1.7	NUOVA SIMONELLI
3	**1186318**	16x10.7x2.6	GAGGIA - SCALA - FIORENZATO CS - VIBIEMME
4	**1186236**	16x10.7x2.6	QUALITY ESPRESSO - EXPOBAR
5	**1401001**	16x11x2.5	FRACINO
5	**1186709**	17x12x2.5	MARCFI-ANCAS
6	**1186745**	17x12x2.5	MARCFI-ANCAS

PALLINE PER VETRI LIVELLO
LEVEL GLASS BALLS
NIVEAUKUGEL FÜR GLÄSER
ESFERAS PARA CRISTALES NIVEL

1 2 3

Photo	LF Code	Dimensions (mm)	Suitable for
1	**1323006**	ø 7	ALL BRANDS - TUTTE LE MARCHE
2	**1323001**	ø 5.8	ALL BRANDS - TUTTE LE MARCHE
3	**1323007**	ø 9,5	ALL BRANDS - TUTTE LE MARCHE

RACCORDI PER VETRI LIVELLO
LEVEL GLASS FITTINGS
ANSCHLÜSSE FÜR NIVEAUGLÄSER
RACORES PARA CRISTALES NIVEL

1

2

3

4

Photo	LF Code	Dimensions (mm)	Suitable for
1	**1349070**	ø 3/8"M - ø 12	BIANCHI - BRASILIA - FIAMMA - FRACINO - GAGGIA - LAVAZZA - VIBIEMME
2	**1201057**	ø 3/8"M - ø 11	SANREMO
3	**1186038**	---	EXPOBAR
4	**1201017**	---	PAVONI

RACCORDI PER VETRI LIVELLO
LEVEL GLASS FITTINGS
ANSCHLÜSSE FÜR NIVEAUGLÄSER
RACORES PARA CRISTALES NIVEL

1

2

3

4

5

Photo	LF Code	Dimensions (mm)	Suitable for
1	**1186448**	ø 14.5x11.5x3.5	BIANCHI - FIAMMA - FIORENZATO CS - LAVAZZA - SCALA
1	**1186420**	ø 15x11.5x3	VIBIEMME
1	**1786037**	ø 15x11.5x3	ECM - BRASILIA - FRACINO - GAGGIA
2	**1186357**	ø 18x13.5x4 mm	CIMBALI - FAEMA
2	**1186219**	ø 18.5x13x3	CARIMALI
3	**1186287**	ø 18x12x3	CONTI
4	**1528015**	ø 24x13.2x6.8	FAEMA
5	**1186269**	ø 18x12x1	CONTI

INTERRUTTORI "UNIVERSALI"
SWITCHES "UNIVERSAL"
SCHALTER "UNIVERSELL"
INTERRUPTORES "UNIVERSALES"

1

2

3

4

Photo	LF Code	Notes
1	**1319581**	9.5.28.34G00
2	**1319582**	9.9.09.50G
3	**1319633**	SWITCH - INTERRUTTORE / 16A 250V
4	**1319632**	SWITCH - INTERRUTTORE / 16A 250V

INTERRUTTORI "UNIVERSALI"
SWITCHES "UNIVERSAL"
SCHALTER "UNIVERSELLE"
INTERRUPTORES "UNIVERSALES"

1

2

3

4

Photo	LF Code	Notes
1	**3319019**	SWITCH - INTERRUTTORE / 16A 250V
2	**3319029**	SWITCH - INTERRUTTORE / 16A 250V
3	**3319035**	SWITCH - INTERRUTTORE / 16A 250V
4	**3319251**	SWITCH - INTERRUTTORE / 16A 250V

INTERRUTTORI "UNIVERSALI"
SWITCHES "UNIVERSAL"
SCHALTER "UNIVERSELLE"
INTERRUPTORES "UNIVERSALES"

1

2

3

4

5

6

Photo	LF Code	Notes
1	**3319267**	PUSH BUTTON - PULSANTE / 16A 250V
2	**3319266**	PUSH BUTTON - PULSANTE / 16A 250V
3	**3319268**	PUSH BUTTON - PULSANTE / 16A 250V
4	**3319018**	CHANGE OVER SWITCH - DEVIATORE / 16A 250V
5	**3319261**	CHANGE OVER SWITCH - DEVIATORE / 16A 250V
6	**3319262**	CHANGE OVER SWITCH - DEVIATORE / 16A 250V

INTERRUTTORI ASTORIA/CMA
SWITCHES ASTORIA/CMA
SCHALTER ASTORIA/CMA
INTERRUPTORES ASTORIA/CMA

1

2

Photo	LF Code	Notes	Suitable for	For machine model
1	**1319498**	ø 12 mm	ASTORIA/CMA 22723022	CALYPSO - GLORIA - GLORIA R12 - PLUS4YOU
2	**1319240**	SWITCH - INTERRUTTORE / 3A 250V	ASTORIA/CMA 22723C	ADRIA - ARGENTA - BRAVA - DENISE - DIVINA - DORA - LISA

INTERRUTTORI ASTORIA/CMA
SWITCHES ASTORIA/CMA
SCHALTER ASTORIA/CMA
INTERRUPTORES ASTORIA/CMA

1

2

3

4

5

6

Photo	LF Code	Notes	Suitable for	For machine model
1	**3319018**	CHANGE OVER SWITCH - DEVIATORE / 16A 250V	ASTORIA/CMA 18135	CK - CKE - CKX - CKXE
2	**3319016**	SWITCH - INTERRUTTORE / 16A 250V	ASTORIA/CMA 18260	ARGENTA - BRAVA - DENISE - DIVINA - DORA - LISA
3	**3319015**	PUSH BUTTON - PULSANTE / 16A 250V	ASTORIA/CMA 18268	CK - CKE - CKX - CKXE
4	**3319931**	SWITCH - INTERRUTTORE / 16A 250V	ASTORIA/CMA 18262	ARGENTA - BRAVA - DENISE - DIVINA - DORA - LISA
5	**3319296**	SWITCH - INTERRUTTORE / 16A 250V	ASTORIA/CMA 18263	GLORIA - GLORIA R12 - PLUS4YOU
6	**1319492**	PUSH BUTTON - PULSANTE / 16A 250V	ASTORIA/CMA 18245	ARGENTA - BRAVA - DENISE - DIVINA - DORA - LISA

INTERRUTTORI ASTORIA/CMA
SWITCHES ASTORIA/CMA
SCHALTER ASTORIA/CMA
INTERRUPTORES ASTORIA/CMA

1

2

3

4

5

6

Photo	LF Code	Notes	Suitable for	For machine model
1	**1319005**	SWITCH - INTERRUTTORE / 16A 250V	ASTORIA/CMA 18371057	CALYPSO - GLORIA - GLORIA R12 - RAPALLO - SIBILLA
2	**1319082**	PUSH BUTTON - PULSANTE / 16A 250V	ASTORIA/CMA 18371058	CALYPSO - GLORIA - GLORIA R12 - RAPALLO - SIBILLA
3	**1319167**	---	ASTORIA/CMA 15373060	CALYPSO - GLORIA - GLORIA R12
4	**1319241**	---	ASTORIA/CMA 15373066	PERLA
5	**3319482**	---	ASTORIA/CMA 15373057	SIBILLA
6	**5029031**	17x13 mm	ASTORIA/CMA 15373058	DORA - GLORIA - LISA - PERLA - PRATIC - SIBILLA

INTERRUTTORI ASTORIA/CMA
SWITCHES ASTORIA/CMA
SCHALTER ASTORIA/CMA
INTERRUPTORES ASTORIA/CMA

1

2

3

4

Photo	LF Code	Notes	Suitable for	For machine model
1	**1319456**	---	ASTORIA/CMA 18371017	DIVINA
2	**1319454**	---	ASTORIA/CMA 18371018	DIVINA
3	**1319446**	---	ASTORIA/CMA 18371019	DIVINA
4	**1319455**	---	ASTORIA/CMA 18371021	DIVINA

INTERRUTTORI ASTORIA/CMA
SWITCHES ASTORIA/CMA
SCHALTER ASTORIA/CMA
INTERRUPTORES ASTORIA/CMA

1

2

3

4

5

Photo	LF Code	Notes	Suitable for	For machine model
1	**1319447**	---	ASTORIA/CMA 18371022	DIVINA
2	**1319458**	---	ASTORIA/CMA 18371020	DIVINA
3	**1319448**	---	ASTORIA/CMA 18371010	DIVINA
4	**1319449**	---	ASTORIA/CMA 18371025	DIVINA - VANIA
5	**1319450**	---	ASTORIA/CMA 18371026	DIVINA

INTERRUTTORI ASTORIA/CMA
SWITCHES ASTORIA/CMA
SCHALTER ASTORIA/CMA
INTERRUPTORES ASTORIA/CMA

1

2

3

4

5

6

Photo	LF Code	Notes	Suitable for	For machine model
1	**1319441**	---	ASTORIA/CMA 20100	ARGENTA
2	**1319452**	---	ASTORIA/CMA 18354	ARGENTA - DENISE - LISA
3	**1319451**	---	ASTORIA/CMA 18365	ARGENTA - LISA - PRATIC
4	**1446556**	---	ASTORIA/CMA 21274	ARGENTA - DENISE - LISA
5	**1319445**	---	ASTORIA/CMA 18371008	CK - CKE - CKX - CKXE
6	**1319015**	---	ASTORIA/CMA 18359001	ADRIA

INTERRUTTORI ASTORIA/CMA
SWITCHES ASTORIA/CMA
SCHALTER ASTORIA/CMA
INTERRUPTORES ASTORIA/CMA

1

2

3

4

5

6

Photo	LF Code	Notes	Suitable for	For machine model
1	**1319505**	---	ASTORIA/CMA 83180011R	GLORIA - GLORIA R12
2	**1319504**	---	ASTORIA/CMA 18371079	GLORIA - GLORIA R12
3	**1319242**	---	ASTORIA/CMA 15373059	GLORIA - GLORIA R12
4	**5062301**	---	ASTORIA/CMA 20126045	CALYPSO
5	**1319500**	DX	ASTORIA/CMA 18371106	PLUS4YOU
6	**1319499**	SX	ASTORIA/CMA 18371107	PLUS4YOU

INTERRUTTORI AZKOYEN
SWITCHES AZKOYEN
SCHALTER AZKOYEN
INTERRUPTORES AZKOYEN

1

2

Photo	LF Code	Notes	Suitable for	For machine model
1	**3319012**	SWITCH - INTERRUTTORE / 16A 250V	AZKOYEN	---
2	**3319953**	SWITCH - INTERRUTTORE / 16A 250V	AZKOYEN	---

INTERRUTTORI BEZZERA
SWITCHES BEZZERA
SCHALTER BEZZERA
INTERRUPTORES BEZZERA

1

2

3

4

5

6

Photo	LF Code	Notes	Suitable for	For machine model
1	**1319816**	SWITCH - INTERRUTTORE / 15A 250V	BEZZERA	---
2	**3319035**	SWITCH - INTERRUTTORE / 16A 250V	BEZZERA 3319035	B2000 - B2006 - B3000 - B4000 - B6000
3	**3319029**	SWITCH - INTERRUTTORE / 16A 250V	BEZZERA 7633309	B2000 - B2006 - B3000 - B4000 - B6000
4	**3319934**	SWITCH - INTERRUTTORE / 16A 250V	BEZZERA 7633308.01	B2000 - B2006 - B4000 - B6000
5	**1319644**	CHANGE OVER SWITCH - DEVIATORE / 16A 250V	BEZZERA 7633309.01	B2000 - B2006 - B4000 - VERTICALE
6	**3319294**	SWITCH - INTERRUTTORE / 16A 250V	BEZZERA 7633313	B2000 - B2006 - C2013 COMPACT - HOBBY - PROEX

INTERRUTTORI BEZZERA
SWITCHES BEZZERA
SCHALTER BEZZERA
INTERRUPTORES BEZZERA

1

2

3

4

Photo	LF Code	Notes	Suitable for	For machine model
1	**3319949**	SWITCH - INTERRUTTORE / 16A 250V	BEZZERA 7633303	BZ02 - BZ35 - BZ40 - BZ99 - B2009 COMPACT
2	**3319928**	SWITCH - INTERRUTTORE / 16A 250V	BEZZERA 7633304	BZ02 - BZ35 - BZ40 - BZ99 - B2009 COMPACT
3	**5062942**	SWITCH - INTERRUTTORE / 16A 250V	BEZZERA 7633331	BZ07 - BZ09 - BZ10 - B6000 - GIULIA
4	**1319645**	SWITCH - INTERRUTTORE / 16A 250V	BEZZERA 7633338	BZ13 - B2013 - B6000 - C2013 COMPACT - ELLISSE NEW

INTERRUTTORI BEZZERA
SWITCHES BEZZERA
SCHALTER BEZZERA
INTERRUPTORES BEZZERA

1

2

3

4

5

6

Photo	LF Code	Notes	Suitable for	For machine model
1	**1319311**	---	BEZZERA 5660510	BZ40 - B2000 - B2006 - B3000 - B4000
2	**1319315**	---	BEZZERA 5660505	EBBIS - ELLISSE
3	**1319313**	---	BEZZERA 5660502	EBBIS - ELLISSE - VERTICALE
4	**1319314**	---	BEZZERA 5660501	EBBIS - ELLISSE
5	**1319817**	---	BEZZERA 5660504	EBBIS - ELLISSE - VERTICALE
6	**1319818**	---	BEZZERA 5660503	B2009 COMPACT - B2013 - C2013 COMPACT - EBBIS - ELLISSE

INTERRUTTORI BEZZERA
SWITCHES BEZZERA
SCHALTER BEZZERA
INTERRUPTORES BEZZERA

1

2

3

4

5

Photo	LF Code	Notes	Suitable for	For machine model
1	**1319640**	---	BEZZERA 7665011	ELLISSE NEW
2	**1319643**	---	BEZZERA 7665012	ELLISSE NEW
3	**1319639**	---	BEZZERA 7665526	B6000
4	**1319309**	---	BEZZERA 7665003	B3000 - VERTICALE
5	**1319310**	---	BEZZERA 7665001	B3000

INTERRUTTORI BFC
SWITCHES BFC
SCHALTER BFC
INTERRUPTORES BFC

1

2

3

4

Photo	LF Code	Notes	Suitable for	For machine model
1	**3319933**	SWITCH - INTERRUTTORE / 16A 250V	BFC 5003080	AZZURRA - CLASSICA - DELUX - GRANDOGE - IMOLA
2	**1319713**	SWITCH - INTERRUTTORE / 16A 250V	BFC 5003010	CLASSICA - JUNIOR
3	**1319687**	SWITCH - INTERRUTTORE / 16A 250V	BFC 5003235	DELUX - LIRA
4	**1319561**	SWITCH - INTERRUTTORE / 16A 250V	BFC 5003230	CLASSICA - GRANDOGE - IMOLA - LA VITTORIA - MARANELLO - MONZA

INTERRUTTORI BFC
SWITCHES BFC
SCHALTER BFC
INTERRUPTORES BFC

1

2

3

4

5

6

Photo	LF Code	Notes	Suitable for	For machine model
1	**1319304**	---	BFC 5031280	LIRA
2	**5053895**	---	BFC 5031305	DELUX - IMOLA - MARANELLO - MONZA
3	**5074357**	---	BFC 5031370	GALILEO
4	**5073208**	---	BFC 5031011	CLASSICA - JUNIOR - LA VITTORIA
5	**5057512**	---	BFC 5031015	GRANDOGE
6	**1319694**	---	BFC 5031210	CLASSICA - LA VITTORIA

INTERRUTTORI BIALETTI
SWITCHES BIALETTI
SCHALTER BIALETTI
INTERRUPTORES BIALETTI

1

2

Photo	LF Code	Notes	Suitable for	For machine model
1	**1319710**	SWITCH - INTERRUTTORE / 16A 250V	BIALETTI 912990380	MOKONA CF40
2	**1319711**	SWITCH - INTERRUTTORE / 16A 250V	BIALETTI 912990390	MOKONA CF40

INTERRUTTORI BIANCHI
SWITCHES BIANCHI
SCHALTER BIANCHI
INTERRUPTORES BIANCHI

1

2

3

4

5

Photo	LF Code	Notes	Suitable for	For machine model
1	**1319614**	PUSH BUTTON - PULSANTE / 16A 250V	BIANCHI 26053416	SOFIA
2	**1319584**	SWITCH - INTERRUTTORE / 10A 250V	BIANCHI 26057916-01	LUCIA
3	**1319587**	SWITCH - INTERRUTTORE / 16A 250V	BIANCHI 43052810	SARA - SOFIA
4	**5035470**	---	BIANCHI 30265811-01	SOFIA
5	**1319580**	---	BIANCHI 30267621	LUCIA

INTERRUTTORI BRASILIA
SWITCHES BRASILIA
SCHALTER BRASILIA
INTERRUPTORES BRASILIA

1

2

3

4

5

6

Photo	LF Code	Notes	Suitable for	For machine model
1	**1319613**	SWITCH - INTERRUTTORE / 16A 250V	BRASILIA 07547.2.00.08	LADY - MINI - MINIPODS
2	**1319611**	SWITCH - INTERRUTTORE / 16A 250V	BRASILIA 06534.2.00.08	LADY - MINI - MINIPODS
3	**1319612**	SWITCH - INTERRUTTORE / 16A 250V	BRASILIA 07545.2.00.08	LADY - MINI - MINIPODS
4	**3319294**	SWITCH - INTERRUTTORE / 16A 250V	BRASILIA 08474.2.00.08	ATTIMO - ROMA
5	**3319948**	SWITCH - INTERRUTTORE / 16A 250V	BRASILIA 00663.2.00.08	ACTIONLADY - BELLE EPOQUE JUNIOR - CLUB
6	**1319614**	PUSH BUTTON - PULSANTE / 16A 250V	BRASILIA 00660.2.00.08	BELLE EPOQUE JUNIOR - CLUB
6	**1319619**	PUSH BUTTON - PULSANTE / 16A 250V	BRASILIA 00661.2.00.08	BELLE EPOQUE - BELLE EPOQUE JUNIOR - CLUB

INTERRUTTORI BRASILIA
SWITCHES BRASILIA
SCHALTER BRASILIA
INTERRUPTORES BRASILIA

1

2

3

4

Photo	LF Code	Notes	Suitable for	For machine model
1	**1319464**	SWITCH - INTERRUTTORE / 16A 250V	BRASILIA 01976.2.00.08	CADETTA - CAPPUCCINO - CENTURY - CENTURY AMERICA
2	**1319005**	SWITCH - INTERRUTTORE / 16A 250V	BRASILIA VEINTCMBIP.08	302
3	**3319921**	SWITCH - INTERRUTTORE / 16A 250V	BRASILIA VEINTCMUNI.08	302
4	**1319583**	---	BRASILIA 12583.2.00.08	ROMA

INTERRUTTORI BRUGNETTI-AURORA
SWITCHES BRUGNETTI-AURORA
SCHALTER BRUGNETTI-AURORA
INTERRUPTORES BRUGNETTI-AURORA

1

Photo	LF Code	Notes	Suitable for	For machine model
1	**1319545**	---	BRUGNETTI-AURORA	---

INTERRUTTORI CARIMALI
SWITCHES CARIMALI
SCHALTER CARIMALI
INTERRUPTORES CARIMALI

1

2

3

4

5

6

Photo	LF Code	Notes	Suitable for	For machine model
1	**3319146**	CHANGE OVER SWITCH - DEVIATORE / 16A 250V	CARIMALI 96.00046	AROMA
2	**1319902**	SWITCH - INTERRUTTORE / 16A 250V	CARIMALI 95.01783	ETABETA - ETABETAV2 - E9 ESPRESSO - KIKKO - TEMASTYLE
3	**3319968**	SWITCH - INTERRUTTORE / 16A 250V	CARIMALI 95.01237	ECO - SYSTEMA - UNO
4	**1319646**	SWITCH - INTERRUTTORE / 16A 250V	CARIMALI 96.00899	PRATICA
5	**1319005**	SWITCH - INTERRUTTORE / 16A 250V	CARIMALI 96.00786	TEMA STYLE
6	**1319082**	PUSH BUTTON - PULSANTE / 16A 250V	CARIMALI 96.00858	CENTO50

INTERRUTTORI CARIMALI
SWITCHES CARIMALI
SCHALTER CARIMALI
INTERRUPTORES CARIMALI

1

2

3

Photo	LF Code	Notes	Suitable for	For machine model
1	**1319822**	---	CARIMALI 02.01827	BETA - ECO - UNO
2	**1319821**	---	CARIMALI 95.01241	SYSTEMA
3	**1319647**	---	CARIMALI 96.00873	PRATICA

INTERRUTTORI CASADIO
SWITCHES CASADIO
SCHALTER CASADIO
INTERRUPTORES CASADIO

1

2

3

4

5

Photo	LF Code	Notes	Suitable for	For machine model
1	**1319435**	---	CASADIO 958811000	DIECIS
2	**1319489**	---	CASADIO 925934000	DODICIS
3	**1319434**	---	CASADIO 958810000	DIECIA
4	**1319439**	---	CASADIO 925902000	DODICIA
5	**1319438**	---	CASADIO 958812000	VENTI

INTERRUTTORI CASADIO
SWITCHES CASADIO
SCHALTER CASADIO
INTERRUPTORES CASADIO

1

2

3

4

5

6

Photo	LF Code	Notes	Suitable for	For machine model
1	**1319712**	---	CASADIO 978527000	UNDICI
2	**1319699**	---	CASADIO 978513010	UNDICI
3	**1319698**	---	CASADIO 973032010	QUINDICI
4	**1319697**	---	CASADIO 973031010	QUINDICI
5	**3319362**	SWITCH - INTERRUTTORE / 16A 250V	CASADIO 532024500	UNDICI
6	**1319202**	SWITCH - INTERRUTTORE / 16A 250V	CASADIO 532009600	DIECI - VENTI

INTERRUTTORI CIMBALI
SWITCHES CIMBALI
SCHALTER CIMBALI
INTERRUPTORES CIMBALI

1

2

3

4

5

6

Photo	LF Code	Notes	Suitable for	For machine model
1	**3319018**	CHANGE OVER SWITCH - DEVIATORE / 16A 250V	CIMBALI 532-004-400	M20
2	**3319016**	SWITCH - INTERRUTTORE / 16A 250V	CIMBALI 532-007-300	MICROCIMBALI
3	**3319012**	SWITCH - INTERRUTTORE / 16A 250V	CIMBALI 532-091-300	M24 - M39TE
4	**3319154**	SWITCH - INTERRUTTORE / 16A 250V	CIMBALI 532-022-300	M21JUNIOR - M32 COMPACT
5	**3319420**	SWITCH - INTERRUTTORE / 16A 250V	CIMBALI 532-022-900	M28 - M29 - M30 - M31 - M32
6	**3319421**	PUSH BUTTON - PULSANTE / 16A 250V	CIMBALI 532-011-300	M28 - M29 - M30

INTERRUTTORI CIMBALI
SWITCHES CIMBALI
SCHALTER CIMBALI
INTERRUPTORES CIMBALI

1

2

3

4

5

Photo	LF Code	Notes	Suitable for	For machine model
1	**1319053**	SWITCH - INTERRUTTORE / 16A 250V	CIMBALI 532-021-708	M27 2008
2	**1319384**	---	CIMBALI 915-400-000	M27 2008
3	**1319523**	---	CIMBALI 422-111-020	M20
4	**1319522**	---	CIMBALI 496-071-010	M30DOSATRON
5	**1319046**	---	CIMBALI 422-259-000	M21JUNIOR - M22

INTERRUTTORI CIMBALI
SWITCHES CIMBALI
SCHALTER CIMBALI
INTERRUPTORES CIMBALI

1

2

3

4

5

Photo	LF Code	Notes	Suitable for	For machine model
1	**1319512**	---	CIMBALI 913-732-000	M39GT
2	**1319518**	---	CIMBALI 913-054-000	M39
3	**1319049**	---	CIMBALI 445-266-000	M32
4	**1319515**	---	CIMBALI 445-270-010	M32
5	**1319520**	---	CIMBALI 445-262-010	M32

INTERRUTTORI CIMBALI
SWITCHES CIMBALI
SCHALTER CIMBALI
INTERRUPTORES CIMBALI

1

2

Photo	LF Code	Notes	Suitable for	For machine model
1	**1319517**	---	CIMBALI 913-061-008	M39DOSATRON
2	**1319680**	TOUCH SCREEN	CIMBALI 949-861-010	M100

INTERRUTTORI CIMBALI
SWITCHES CIMBALI
SCHALTER CIMBALI
INTERRUPTORES CIMBALI

1

2

3

4

Photo	LF Code	Notes	Suitable for	For machine model
1	**5060417**	---	CIMBALI 952-715-010	M24
2	**1319715**	---	CIMBALI 952-716-000	M24
3	**1319698**	---	CIMBALI 973-032-010	M27 RE
4	**1319697**	---	CIMBALI 973-031-010	M27 RE

INTERRUTTORI CONTI
SWITCHES CONTI
SCHALTER CONTI
INTERRUPTORES CONTI

1

2

3

Photo	LF Code	Notes	Suitable for	For machine model
1	**3319154**	SWITCH - INTERRUTTORE / 16A 250V	CONTI 408501	CLUB - XEOS
2	**1319902**	SWITCH - INTERRUTTORE / 16A 250V	CONTI 411429	CLASSICA
3	**1319332**	---	CONTI 410304	CLUB - XEOS2

INTERRUTTORI DELONGHI
SWITCHES DELONGHI
SCHALTER DELONGHI
INTERRUPTORES DELONGHI

1

2

3

4

5

6

Photo	LF Code	Notes	Suitable for	For machine model
1	**3319310**	SWITCH - INTERRUTTORE / 12A 250V	DELONGHI 5132112500	ECAM23.210.W
2	**1319598**	SWITCH - INTERRUTTORE / 16A 250V	DELONGHI 5113210371	ECAM26.455.C
3	**1319599**	SWITCH - INTERRUTTORE / 16A 250V	DELONGHI 5132100800	ECOV310AZ - EC300M
4	**1319597**	SWITCH - INTERRUTTORE / 16A 250V	DELONGHI 5132100700	ECOV310AZ - EC300M
5	**1319596**	---	DELONGHI 5313234821	ECOV310AZ
6	**1319603**	---	DELONGHI 5532128400	EC300M

INTERRUTTORI DELONGHI
SWITCHES DELONGHI
SCHALTER DELONGHI
INTERRUPTORES DELONGHI

1

2

3

4

5

Photo	LF Code	Notes	Suitable for	For machine model
1	**1319684**	PUSH BUTTON - PULSANTE / 16A 250V	DELONGHI 5113211491	ECI341 - ECOV311 - ECO311 - ECZ351 - EC221 - EC331
2	**1319686**	---	DELONGHI 5913212341	EC850.M - EC860.M
3	**5075506**	---	DELONGHI 5913210191	ESAM5500
4	**5075504**	---	DELONGHI 5913212251	ESAM5500
5	**5075507**	---	DELONGHI 5913210181	ESAM5400 - ESAM5450 - ESAM5500

INTERRUTTORI DELONGHI
SWITCHES DELONGHI
SCHALTER DELONGHI
INTERRUPTORES DELONGHI

1

2

3

4

5

6

Photo	LF Code	Notes	Suitable for	For machine model
1	**1319685**	---	DELONGHI 7313285189	EC680
2	**1319683**	---	DELONGHI 5213213621	EC850.M - EC860.M
3	**D390006**	---	DELONGHI 5213213011	ESAM2800.SB EX:1
4	**5054448**	---	DELONGHI 5232110000	EAM3000 - EAM3200 - ESAM2600 - ESAM3300 - ESAM4300
5	**1390126**	---	DELONGHI 5213214941	ESAM3500.S - ESAM3550.B - ESAM3600.S - ESAM4500
6	**D390020**	---	DELONGHI 5213212821	ESAM4400

INTERRUTTORI DIDIESSE
SWITCHES DIDIESSE
SCHALTER DIDIESSE
INTERRUPTORES DIDIESSE

1

2

3

4

Photo	LF Code	Notes	Suitable for	For machine model
1	**1319674**	SWITCH - INTERRUTTORE / 16A 250V	DIDIESSE FR003	FROG
2	**1319676**	SWITCH - INTERRUTTORE / 16A 250V	DIDIESSE FR038	FROG
3	**9319042**	SWITCH - INTERRUTTORE / 16A 250V	DIDIESSE FR039	FROG
4	**1319673**	SWITCH - INTERRUTTORE / 16A 250V	DIDIESSE FR004	FROG

INTERRUTTORI ECM
SWITCHES ECM
SCHALTER ECM
INTERRUPTORES ECM

1

2

Photo	LF Code	Notes	Suitable for	For machine model
1	**1319583**	---	ECM C199900293	RAFFAELLO
2	**1319296**	---	ECM C199900241	MICHELANGELO - RAFFAELLO

INTERRUTTORI ECM MANUFACTURE
SWITCHES ECM MANUFACTURE
SCHALTER ECM MANUFACTURE
INTERRUPTORES ECM MANUFACTURE

1

2

Photo	LF Code	Notes	Suitable for	For machine model
1	**3319310**	SWITCH - INTERRUTTORE / 10A 250V	ECM MANUFACTURE P9114	ELEKTRONIKA II PROFI
2	**1319593**	SWITCH - INTERRUTTORE / 16A 250V	ECM MANUFACTURE C199900087	CLASSIKA II - ELEKTRONIKA II PROFI - MECHANIKA

INTERRUTTORI ELEKTRA
SWITCHES ELEKTRA
SCHALTER ELEKTRA
INTERRUPTORES ELEKTRA

1

2

3

4

5

6

Photo	LF Code	Notes	Suitable for	For machine model
1	**3319294**	SWITCH - INTERRUTTORE / 16A 250V	ELEKTRA 01603035	MICROCASA
2	**3319501**	---	ELEKTRA 02198035	MICROCASA
3	**3319920**	SWITCH - INTERRUTTORE / 16A 250V	ELEKTRA 01221035	MINIVERTICALE
4	**1319005**	SWITCH - INTERRUTTORE / 16A 250V	ELEKTRA 02563035	NIVOLA
5	**1054031**	---	ELEKTRA 03196035	CLASSIC - SIXTIES
6	**1054030**	---	ELEKTRA 01955034	CLASSIC - SIXTIES

INTERRUTTORI EXPOBAR
SWITCHES EXPOBAR
SCHALTER EXPOBAR
INTERRUPTORES EXPOBAR

1 2 3 4 5

Photo	LF Code	Notes	Suitable for	For machine model
1	**5052731**	230V	EXPOBAR 60100026	MEGACREM - MONROC
2	**1319320**	---	EXPOBAR 60100300	G10 - MARKUS - MARKUS SILVER - MONROC
3	**1319132**	---	EXPOBAR 60101000	MONROC
4	**1319341**	230V	EXPOBAR 60100020	NEW ELEGANCE
4	**5029813**	115V	EXPOBAR 60100025	NEW ELEGANCE
5	**5053624**	---	EXPOBAR 60100402	MARKUS SILVER - NEW ELEGANCE - OFFICE
5	**5062236**	---	EXPOBAR 60100401	MARKUS SILVER - NEW ELEGANCE

INTERRUTTORI EXPOBAR
SWITCHES EXPOBAR
SCHALTER EXPOBAR
INTERRUPTORES EXPOBAR

1 2

Photo	LF Code	Notes	Suitable for	For machine model
1	**3319019**	SWITCH - INTERRUTTORE / 16A 250V	EXPOBAR 60900035	ELEN - G10 - MARKUS - MEGACREM - MONROC - NEW ELEGANCE
2	**3319529**	SWITCH - INTERRUTTORE / 10A 250V	EXPOBAR 60900043	ELEN - G10 - MARKUS - MARKUS SILVER - MEGACREM - MONROC

INTERRUTTORI FAEMA
SWITCHES FAEMA
SCHALTER FAEMA
INTERRUPTORES FAEMA

1 2 3 4 5 6

Photo	LF Code	Notes	Suitable for	For machine model
1	**3319154**	BLACK SWITCH - INTERRUTTORE NERO / 16A 250V	FAEMA 532022300	E98 COMPACT
1	**3319012**	GREEN SWITCH - INTERRUTTORE VERDE / 16A 250V	FAEMA 532091300	EMBLEMA - EMBLEMA RESTYLING - TEOREMA
2	**3319420**	SWITCH - INTERRUTTORE / 16A 250V	FAEMA 532022900	FAEMART
3	**1319561**	SWITCH - INTERRUTTORE / 16A 250V	FAEMA 3761130381	COMPACT - SPECIAL
4	**1319053**	SWITCH - INTERRUTTORE / 16A 250V	FAEMA 3341132683	DUES - E98COMPACT - E98PRESIDENT
5	**1319098**	SWITCH - INTERRUTTORE / 16A 250V	FAEMA 532015800	ELITE - E92COMPACT
6	**1319052**	SWITCH - INTERRUTTORE / 16A 250V	FAEMA 3761132128	ELITE - E91 - E92COMPACT

INTERRUTTORI FAEMA
SWITCHES FAEMA
SCHALTER FAEMA
INTERRUPTORES FAEMA

1

2

3

4

5

6

Photo	LF Code	Notes	Suitable for	For machine model
1	**1319020**	---	FAEMA 3301134529	E97
2	**1319051**	---	FAEMA 3301134930	DUE
3	**5030573**	---	FAEMA 3301135601	SMART
4	**1319503**	---	FAEMA	DUEA
5	**1319501**	---	FAEMA 3761131514	COMPACT
6	**1319502**	---	FAEMA 3761130701	EXPRESS

INTERRUTTORI FAEMA
SWITCHES FAEMA
SCHALTER FAEMA
INTERRUPTORES FAEMA

1

2

3

4

5

6

Photo	LF Code	Notes	Suitable for	For machine model
1	**1319025**	---	FAEMA 3301132572	E91NDIPLOMAT
2	**1319038**	---	FAEMA 3301132571	E91NDIPLOMAT
3	**5038008**	---	FAEMA 915173000	ENOVA
4	**5058250**	---	FAEMA 915313010	ENOVA
5	**1319022**	---	FAEMA 3301134927	E98 PRESIDENT
6	**1319384**	---	FAEMA 915400000	E98 PRESIDENT RESTYLING

INTERRUTTORI FAEMA
SWITCHES FAEMA
SCHALTER FAEMA
INTERRUPTORES FAEMA

1

2

3

4

5

6

Photo	LF Code	Notes	Suitable for	For machine model
1	**1319044**	---	FAEMA 4831134255	E91AMBASSADOR
2	**1319097**	---	FAEMA 902114000	E92 COMPACT - E92 ELITE
3	**1319054**	---	FAEMA 4531132425	DUE
4	**1319028**	---	FAEMA 3538133931	E91NDIPLOMAT
5	**1241317**	---	FAEMA 3538133898	E91 - E91NDIPLOMAT
6	**1319096**	---	FAEMA 990728000	E98 - E98 COMPACT

INTERRUTTORI FAEMA
SWITCHES FAEMA
SCHALTER FAEMA
INTERRUPTORES FAEMA

1

2

3

4

Photo	LF Code	Notes	Suitable for	For machine model
1	**1319679**	---	FAEMA 927568000	EMBLEMA - EMBLEMA RESTYLING
2	**1319677**	---	FAEMA 927575000	EMBLEMA - EMBLEMA RESTYLING
3	**1319698**	---	FAEMA 973032010	E98 RE
4	**1319697**	---	FAEMA 973031010	E98 RE

INTERRUTTORI FIAMMA RST
SWITCHES FIAMMA RST
SCHALTER FIAMMA RST
INTERRUPTORES FIAMMA RST

1

2

3

4

5

6

Photo	LF Code	Notes	Suitable for	For machine model
1	**3319920**	SWITCH - INTERRUTTORE / 16A 250V	FIAMMA RST 4.0.000.0513	ATLANTIC - MARINA - MINIBAR - PRESTIGE
2	**1319395**	SWITCH - INTERRUTTORE / 10A 250V	FIAMMA RST 4.0.000.0510	ATLANTIC - PRESTIGE
3	**1319635**	---	FIAMMA RST 4.0.000.0503	ATLANTIC - MARINA - MINIBAR - PRESTIGE
4	**1319634**	---	FIAMMA RST 4.0.000.0507	ATLANTIC - MARINA - MINIBAR - PRESTIGE
5	**1319636**	---	FIAMMA RST 4.0.000.0980	MARINA
6	**1319497**	---	FIAMMA RST 4.0.000.0955	ATLANTIC - PRESTIGE

INTERRUTTORI FIORENZATO CS
SWITCHES FIORENZATO CS
SCHALTER FIORENZATO CS
INTERRUPTORES FIORENZATO CS

1

2

3

4

5

6

Photo	LF Code	Notes	Suitable for	For machine model
1	**3319252**	SWITCH - INTERRUTTORE / 16A 250V	FIORENZATO CS A2100038	DUCALE
2	**3319296**	SWITCH - INTERRUTTORE / 16A 250V	FIORENZATO CS A2100093	BRICOLETTA - DUCALE - PIAZZA SAN MARCO
3	**1319271**	SWITCH - INTERRUTTORE / 16A 250V	FIORENZATO CS A2100043	COLOMBINA - DUCALE
4	**1319514**	SWITCH - INTERRUTTORE / 16A 250V	FIORENZATO CS A2100045	LIDO - VENEZIA
5	**1319464**	SWITCH - INTERRUTTORE / 16A 250V	FIORENZATO CS A2100094	FENICE
6	**1319463**	PUSH BUTTON - PULSANTE / 16A 250V	FIORENZATO CS A2100041	FENICE - LIDO

INTERRUTTORI FIORENZATO CS
SWITCHES FIORENZATO CS
SCHALTER FIORENZATO CS
INTERRUPTORES FIORENZATO CS

1

2

3

4

5

Photo	LF Code	Notes	Suitable for	For machine model
1	**1319513**	SWITCH - INTERRUTTORE / 16A 250V	FIORENZATO CS A2100044	BRICOLETTA - COLOMBINA - VOLANTE
2	**1319583**	---	FIORENZATO CS A1500001	DUCALE - RIALTO - ACCADEMIA
3	**1319272**	---	FIORENZATO CS A1500091	DUCALE
4	**5024214**	---	FIORENZATO CS A1500002	BRICOLETTA
5	**1319462**	---	FIORENZATO CS A1500034	FENICE

INTERRUTTORI FRACINO
SWITCHES FRACINO
SCHALTER FRACINO
INTERRUPTORES FRACINO

1

Photo	LF Code	Notes	Suitable for	For machine model
1	**1319637**	SWITCH - INTERRUTTORE / 10A 250V	FRACINO FC189	BAMBINO - CHERUB - HEAVENLY - RETRO

INTERRUTTORI FUTURMAT
SWITCHES FUTURMAT
SCHALTER FUTURMAT
INTERRUPTORES FUTURMAT

1

2

3

4

Photo	LF Code	Notes	Suitable for	For machine model
1	**1319076**	---	FUTURMAT 08330700	F3
2	**1319077**	---	FUTURMAT 08336900	F3
3	**1319078**	---	FUTURMAT 08337000	F3
4	**1319079**	---	FUTURMAT 08331900	F3

INTERRUTTORI FUTURMAT
SWITCHES FUTURMAT
SCHALTER FUTURMAT
INTERRUPTORES FUTURMAT

1

2

3

4

5

6

Photo	LF Code	Notes	Suitable for	For machine model
1	**1319638**	---	FUTURMAT 08427600	RIMINI
2	**1319064**	---	FUTURMAT 08274201	RIMINI
3	**1319069**	---	FUTURMAT 08274409	RIMINI
4	**1319065**	---	FUTURMAT 08272205	RIMINI
5	**1319061**	---	FUTURMAT 08109400	RIMINI
6	**3319035**	---	FUTURMAT 07967000	RIMINI

INTERRUTTORI GAGGIA
SWITCHES GAGGIA
SCHALTER GAGGIA
INTERRUPTORES GAGGIA

1

2

3

4

5

Photo	LF Code	Notes	Suitable for	For machine model
1	**3319016**	SWITCH - INTERRUTTORE / 16A 250V	GAGGIA 5008002000	TS
2	**1319527**	SWITCH - INTERRUTTORE / 16A 250V	GAGGIA DM1362/RO	E90 - TE - TS - XE
3	**3319944**	SWITCH - INTERRUTTORE / 16A 250V	GAGGIA S435061	G105 - G106
4	**1319128**	SWITCH - INTERRUTTORE / 16A 250V	GAGGIA S435063	G105 - G106
5	**1319330**	SWITCH - INTERRUTTORE / 16A 250V	GAGGIA DM1477	ESPRESSO - ESPRESSODELUXE

INTERRUTTORI GAGGIA
SWITCHES GAGGIA
SCHALTER GAGGIA
INTERRUPTORES GAGGIA

1

2

3

4

5

Photo	LF Code	Notes	Suitable for	For machine model
1	**1319252**	PUSH BUTTON - PULSANTE / 16A 250V	GAGGIA DM1160/220	BABY - DANDY
2	**1319251**	PUSH BUTTON - PULSANTE / 16A 250V	GAGGIA DM1172/220	BABY - DANDY
3	**3319948**	SWITCH - INTERRUTTORE / 16A 250V	GAGGIA WGADM2104	DECO - GD - GE - XD - XE
4	**1319323**	---	GAGGIA DM1475	CLASSIC
5	**1319664**	SWITCH - INTERRUTTORE / 16A 250V	GAGGIA 11027328	GRAN GAGGIA

INTERRUTTORI GAGGIA
SWITCHES GAGGIA
SCHALTER GAGGIA
INTERRUPTORES GAGGIA

1

2

3

4

5

Photo	LF Code	Notes	Suitable for	For machine model
1	**3319920**	SWITCH - INTERRUTTORE / 16A 250V	GAGGIA 5024008000	XE
2	**3319921**	SWITCH - INTERRUTTORE / 16A 250V	GAGGIA 5024006000	XE
3	**1319082**	PUSH BUTTON - PULSANTE / 16A 250V	GAGGIA 5024003000	DECO - XD - XE
4	**1319319**	SWITCH - INTERRUTTORE / 16A 250V	GAGGIA 5332002000	NEWBABY06
5	**1319377**	SWITCH - INTERRUTTORE / 16A 250V	GAGGIA 5332003000	NEWBABY06

INTERRUTTORI GAGGIA
SWITCHES GAGGIA
SCHALTER GAGGIA
INTERRUPTORES GAGGIA

1

2

3

4

5

6

Photo	LF Code	Notes	Suitable for	For machine model
1	**1319542**	SWITCH - INTERRUTTORE / 16A 250V	GAGGIA WGA5001001000	GD - GE
2	**1319381**	SWITCH - INTERRUTTORE / 16A 250V	GAGGIA 5337002000	NEWESPRESSO06
3	**1319544**	SWITCH - INTERRUTTORE / 16A 250V	GAGGIA WGA5302001000	EVOLUTION - GE - VIVAGAGGIA
4	**1319547**	PUSH BUTTON - PULSANTE / 16A 250V	GAGGIA WGA5001009000	GD
5	**1319376**	SWITCH - INTERRUTTORE / 16A 250V	GAGGIA 5332004000	NEWBABY06 - NEWESPRESSO06
6	**1319599**	SWITCH - INTERRUTTORE / 16A 250V	GAGGIA 11027329	GRAN GAGGIA

INTERRUTTORI GAGGIA
SWITCHES GAGGIA
SCHALTER GAGGIA
INTERRUPTORES GAGGIA

1

2

3

4

5

Photo	LF Code	Notes	Suitable for	For machine model
1	**1319329**	SWITCH - INTERRUTTORE / 16A 250V	GAGGIA DM1884/01	CAREZZA
2	**1319380**	SWITCH - INTERRUTTORE / 16A 250V	GAGGIA DM1883/01	CAREZZA
3	**1319382**	SWITCH - INTERRUTTORE / 16A 250V	GAGGIA NE03.038	DECO - SYNCRONY - TITANIUM
4	**1319383**	---	GAGGIA 8332030000	NEWBABY06TWIN
5	**1319562**	---	GAGGIA WGA4001080000	GD - GE

INTERRUTTORI GAGGIA
SWITCHES GAGGIA
SCHALTER GAGGIA
INTERRUPTORES GAGGIA

1

2

3

4

5

Photo	LF Code	Notes	Suitable for	For machine model
1	**1319663**	---	GAGGIA 11028043	GRAN GAGGIA
2	**1319550**	---	GAGGIA 6001024000	GD - GE
3	**1319578**	---	GAGGIA WGA6003016000	GD
4	**1319549**	---	GAGGIA 5027015000	DECO
5	**1319548**	---	GAGGIA 5027014000	DECO

INTERRUTTORI GAGGIA
SWITCHES GAGGIA
SCHALTER GAGGIA
INTERRUPTORES GAGGIA

1

2

3

4

Photo	LF Code	Notes	Suitable for	For machine model
1	**1319530**	---	GAGGIA 8027063000	DECO
2	**1319538**	---	GAGGIA 8027061000	DECO
3	**1319529**	---	GAGGIA 8001051000	GD
4	**1319528**	---	GAGGIA WGA8003007000	XD

INTERRUTTORI GAGGIA
SWITCHES GAGGIA
SCHALTER GAGGIA
INTERRUPTORES GAGGIA

1

2

3

4

5

Photo	LF Code	Notes	Suitable for	For machine model
1	**1319067**	---	GAGGIA DM1878	XD
2	**1319579**	---	GAGGIA DM1877	D90 - XD
3	**1319678**	---	GAGGIA DM1622	TD
4	**1319695**	136x40 mm	GAGGIA 11021372	BRERA
5	**1319696**	136x40 mm	GAGGIA 11025084	UNICA

INTERRUTTORI GAGGIA SPAGNA
SWITCHES GAGGIA SPAGNA
SCHALTER GAGGIA SPAGNA
INTERRUPTORES GAGGIA SPAGNA

1

2

3

4

5

6

Photo	LF Code	Notes	Suitable for	For machine model
1	**1319064**	---	GAGGIA SPAGNA 08274201	NERA
2	**1319069**	---	GAGGIA SPAGNA 08274409	NERA
3	**1319065**	---	GAGGIA SPAGNA 08272205	NERA
4	**1319638**	---	GAGGIA SPAGNA 08427600	NERA
5	**3319035**	---	GAGGIA SPAGNA 07967010	BELLA - NERA
6	**3319934**	---	GAGGIA SPAGNA 07967020	KB

INTERRUTTORI GRIMAC
SWITCHES GRIMAC
SCHALTER GRIMAC
INTERRUPTORES GRIMAC

1

2

3

4

5

6

Photo	LF Code	Notes	Suitable for	For machine model
1	**3319296**	SWITCH - INTERRUTTORE / 16A 250V	GRIMAC A2100093	G11
2	**3319294**	SWITCH - INTERRUTTORE / 16A 250V	GRIMAC 1160200035-GR113	MIA - NEWCIALDAVAPOR - TEN - TWENTY - VAPORDOUBLE
3	**1319809**	SWITCH - INTERRUTTORE / 16A 250V	GRIMAC 1160200079-MG073	G10 - MIA - NEWCIALDAVAPOR - TWENTY - ZOLAI
4	**1319806**	SWITCH - INTERRUTTORE / 16A 250V	GRIMAC 1160200037-GR121	MIA - NEWCIALDAVAPOR
5	**1319392**	SWITCH - INTERRUTTORE / 10A 250V	GRIMAC 1160200091	AMBRA
6	**1319463**	PUSH BUTTON - PULSANTE / 16A 250V	GRIMAC A2100041	G11

INTERRUTTORI GRIMAC
SWITCHES GRIMAC
SCHALTER GRIMAC
INTERRUPTORES GRIMAC

1

2

3

4

5

6

Photo	LF Code	Notes	Suitable for	For machine model
1	**1319393**	SWITCH - INTERRUTTORE / 10A 250V	GRIMAC 1160200104	AMBRA - OPALE
2	**1319005**	SWITCH - INTERRUTTORE / 16A 250V	GRIMAC 1160200057-MG544	DADAVAPORDOUBLE - MAXI - SWEET
3	**3319921**	SWITCH - INTERRUTTORE / 16A 250V	GRIMAC 1160200059-MG545	DADAVAPORDOUBLE
4	**1319391**	SWITCH - INTERRUTTORE / 16A 250V	GRIMAC 2160200004-MG717	NUVOLA - TERRY
5	**1319394**	PUSH BUTTON - PULSANTE / 10A 250V	GRIMAC 2160200002-MG715	NUVOLA - TERRY
6	**1319395**	SWITCH - INTERRUTTORE / 10A 250V	GRIMAC 2160200003-MG716	NUVOLA - TERRY

INTERRUTTORI GRIMAC
SWITCHES GRIMAC
SCHALTER GRIMAC
INTERRUPTORES GRIMAC

1

2

3

4

5

Photo	LF Code	Notes	Suitable for	For machine model
1	**1054100**	---	GRIMAC 1040200004-GR159	ZOLAI - ZOLAII
2	**1319602**	---	GRIMAC 2040300001-GRW159	TWENTY
3	**1319601**	---	GRIMAC GRC104/1	ECLISSE
4	**1319600**	---	GRIMAC 1040300026-GRC104	ECLISSE - G10
5	**1319585**	---	GRIMAC A1500106	G11

INTERRUTTORI ISOMAC
SWITCHES ISOMAC
SCHALTER ISOMAC
INTERRUPTORES ISOMAC

1

2

3

4

Photo	LF Code	Notes	Suitable for	For machine model
1	**5066397**	SWITCH - INTERRUTTORE / 10A 250V	ISOMAC 435008	ZAFFIRO
2	**1319653**	SWITCH - INTERRUTTORE / 15A 250V	ISOMAC IS000235	GIADA - MAVERICK
3	**1319652**	SWITCH - INTERRUTTORE / 15A 250V	ISOMAC IS000234	GIADA - MAVERICK
4	**1319651**	SWITCH - INTERRUTTORE / 10A 250V	ISOMAC 435074	MILLENNIUM - MONDIALE - TEA - VENUS - ZAFFIRO

INTERRUTTORI ITALCREM
SWITCHES ITALCREM
SCHALTER ITALCREM
INTERRUPTORES ITALCREM

1

2

3

4

5

Photo	LF Code	Notes	Suitable for	For machine model
1	**1319064**	---	ITALCREM 08274201	CAPRI
2	**1319069**	---	ITALCREM 08274409	CAPRI
3	**1319065**	---	ITALCREM 08272205	CAPRI
4	**1319638**	---	ITALCREM 08427600	CAPRI
5	**3319035**	---	ITALCREM 07967010	CAPRI - IT4

INTERRUTTORI LA PICCOLA
SWITCHES LA PICCOLA
SCHALTER LA PICCOLA
INTERRUPTORES LA PICCOLA

1

2

3

4

5

6

Photo	LF Code	Notes	Suitable for	For machine model
1	**1319704**	SWITCH - INTERRUTTORE / 16A 250V	LA PICCOLA C04	PICCOLA
2	**1319708**	SWITCH - INTERRUTTORE / 16A 250V	LA PICCOLA C05	PICCOLA
3	**1319613**	SWITCH - INTERRUTTORE / 16A 250V	LA PICCOLA C31	CECILIA
4	**1319705**	SWITCH - INTERRUTTORE / 16A 250V	LA PICCOLA C10	SARA
5	**1319706**	SWITCH - INTERRUTTORE / 16A 250V	LA PICCOLA C11	SARA
6	**1319707**	PUSH BUTTON - PULSANTE / 16A 250V	LA PICCOLA C19	SARA

INTERRUTTORI LAVAZZA
SWITCHES LAVAZZA
SCHALTER LAVAZZA
INTERRUPTORES LAVAZZA

1

2

3

4

5

6

Photo	LF Code	Notes	Suitable for	For machine model
1	**1319240**	SWITCH - INTERRUTTORE / 3A 250V	LAVAZZA 10066212	LB4711
2	**1319005**	SWITCH - INTERRUTTORE / 16A 250V	LAVAZZA 10067241	LB4701R - LB4600 - LB4700R
3	**1319082**	PUSH BUTTON - PULSANTE / 16A 250V	LAVAZZA 10067242	LB4700R - LB4701R
4	**1319614**	PUSH BUTTON - PULSANTE / 16A 250V	LAVAZZA 10084203	LB4200 - LB4600
5	**1319665**	---	LAVAZZA 10067237	LB4700R - LB4701R
6	**1319666**	---	LAVAZZA 10067238	LB4700R - LB4701R

INTERRUTTORI LAVAZZA
SWITCHES LAVAZZA
SCHALTER LAVAZZA
INTERRUPTORES LAVAZZA

1

2

3

4

5

Photo	LF Code	Notes	Suitable for	For machine model
1	**3319296**	SWITCH - INTERRUTTORE / 16A 250V	LAVAZZA 10066208	LB2800 - LB4711
2	**1319005**	SWITCH - INTERRUTTORE / 16A 250V	LAVAZZA 10067241	LB4701R - LB4600 - LB4700R
3	**5029031**	---	LAVAZZA 10084139	LB4600
4	**3319170**	---	LAVAZZA 10084140	LB4600
5	**5035470**	---	LAVAZZA 10084258	LB4600

INTERRUTTORI LAVAZZA
SWITCHES LAVAZZA
SCHALTER LAVAZZA
INTERRUPTORES LAVAZZA

1

2

3

4

5

Photo	LF Code	Notes	Suitable for	For machine model
1	**1319547**	PUSH BUTTON - PULSANTE / 16A 250V	LAVAZZA 10061921	LB4800
2	**1319562**	---	LAVAZZA 10061893	LB4800
3	**1319578**	---	LAVAZZA 10061949	LB4800
4	**3319948**	SWITCH - INTERRUTTORE / 16A 250V	LAVAZZA 10062023	LB4800
5	**1319528**	---	LAVAZZA 10061986	LB4800

INTERRUTTORI MAIRALI
SWITCHES MAIRALI
SCHALTER MAIRALI
INTERRUPTORES MAIRALI

1

2

3

4

5

Photo	LF Code	Notes	Suitable for	For machine model
1	**1319064**	---	MAIRALI 08274201	GIULIETTA
2	**1319069**	---	MAIRALI 08274409	GIULIETTA
3	**1319065**	---	MAIRALI 08272205	GIULIETTA
4	**1319638**	---	MAIRALI 08427600	GIULIETTA
5	**3319035**	---	MAIRALI 07967010	ARIANNE - GIULIETTA

INTERRUTTORI MARCFI-ANCAS
SWITCHES MARCFI-ANCAS
SCHALTER MARCFI-ANCAS
INTERRUPTORES MARCFI-ANCAS

1

Photo	LF Code	Notes	Suitable for	For machine model
1	**1319034**	SWITCH - INTERRUTTORE / 16A 250V	MARCFI-ANCAS	---

INTERRUTTORI MARZOCCO
SWITCHES MARZOCCO
SCHALTER MARZOCCO
INTERRUPTORES MARZOCCO

1

2

3

4

Photo	LF Code	Notes	Suitable for	For machine model
1	**1319035**	SWITCH - INTERRUTTORE / 16A 250V	MARZOCCO L285/1	FB70 - LINEA
2	**1319032**	PUSH BUTTON - PULSANTE / 16A 250V	MARZOCCO L286/1	FB70 - FB80 - GB5 - LINEA
3	**1319033**	PUSH BUTTON - PULSANTE / 16A 250V	MARZOCCO L286LM	FB70 - FB80 - GB5 - LINEA
4	**1319363**	SWITCH - INTERRUTTORE / 16A 250V	MARZOCCO L287	FB70 - LINEA

INTERRUTTORI MARZOCCO
SWITCHES MARZOCCO
SCHALTER MARZOCCO
INTERRUPTORES MARZOCCO

1

2

3

4

5

Photo	LF Code	Notes	Suitable for	For machine model
1	**3319294**	SWITCH - INTERRUTTORE / 16A 250V	MARZOCCO L285	FB70 - LINEA
2	**1319865**	SWITCH - INTERRUTTORE / 16A 250V	MARZOCCO L283	FB70 - LINEA
3	**1319248**	---	MARZOCCO L284	FB70 - LINEA
4	**1319253**	---	MARZOCCO L285/T	FB70 - LINEA
5	**1319709**	---	MARZOCCO E.1.008	GB5 - FB80 - MISTRAL

INTERRUTTORI MARZOCCO
SWITCHES MARZOCCO
SCHALTER MARZOCCO
INTERRUPTORES MARZOCCO

1

2

3

4

5

6

Photo	LF Code	Notes	Suitable for	For machine model
1	**1319249**	---	MARZOCCO LAD3D5/P3C	FB70 - LINEA
2	**1319247**	---	MARZOCCO LAD3D5/P	FB70 - LINEA
3	**1319808**	---	MARZOCCO LAD3D5/THE	FB70 - LINEA
4	**5055352**	---	MARZOCCO LAD3D5/S	FB70 - LINEA
5	**1319243**	---	MARZOCCO E.1.003	FB80 - GB5
6	**1319245**	---	MARZOCCO E.1.002	FB80 - GB5

INTERRUTTORI MCE
SWITCHES MCE
SCHALTER MCE
INTERRUPTORES MCE

1

2

Photo	LF Code	Notes	Suitable for	For machine model
1	**3319296**	SWITCH - INTERRUTTORE / 16A 250V	MCE 18263	START
2	**3319501**	---	MCE 19049	START

INTERRUTTORI NUOVA SIMONELLI
SWITCHES NUOVA SIMONELLI
SCHALTER NUOVA SIMONELLI
INTERRUPTORES NUOVA SIMONELLI

1

2

3

4

5

6

Photo	LF Code	Notes	Suitable for	For machine model
1	**3319019**	SWITCH - INTERRUTTORE / 16A 250V	NUOVA SIMONELLI 04200011	APPIA - APPIA COMPACT - JAZZ - MAC2000 - MUSICA
2	**1319392**	SWITCH - INTERRUTTORE / 10A 250V	NUOVA SIMONELLI 04200057	APPIA - APPIA COMPACT - AURELIA - AURELIAII - MUSICA
3	**3319420**	SWITCH - INTERRUTTORE / 16A 250V	NUOVA SIMONELLI 04200030	MACDIGIT - OPTIMA - PROGRAM
4	**3319421**	PUSH BUTTON - PULSANTE / 16A 250V	NUOVA SIMONELLI 04200032	MACDIGIT
5	**3319948**	SWITCH - INTERRUTTORE / 16A 250V	NUOVA SIMONELLI 04200039	BEACH - ELLI
6	**1319092**	SWITCH - INTERRUTTORE / 16A 250V	NUOVA SIMONELLI 04200051	OSCAR - PREMIERMAXI

INTERRUTTORI NUOVA SIMONELLI
SWITCHES NUOVA SIMONELLI
SCHALTER NUOVA SIMONELLI
INTERRUPTORES NUOVA SIMONELLI

1

2

3

4

5

6

Photo	LF Code	Notes	Suitable for	For machine model
1	**5041947**	---	NUOVA SIMONELLI 04900706.S	AURELIA
2	**5031554**	---	NUOVA SIMONELLI 04900706	AURELIA
3	**5048198**	---	NUOVA SIMONELLI 04900707.S	AURELIA
4	**5032627**	---	NUOVA SIMONELLI 04900738	APPIA
5	**5032626**	---	NUOVA SIMONELLI 04900737	APPIA
6	**1390101**	---	NUOVA SIMONELLI 04900112	PREMIER - PREMIERMAXI - PROGRAMVIP

INTERRUTTORI ORCHESTRALE
SWITCHES ORCHESTRALE
SCHALTER ORCHESTRALE
INTERRUPTORES ORCHESTRALE

1

2

3

4

Photo	LF Code	Notes	Suitable for	For machine model
1	**3319296**	SWITCH - INTERRUTTORE / 16A 250V	ORCHESTRALE D18263	ETNICA - PHONICA
2	**1319005**	SWITCH - INTERRUTTORE / 16A 250V	ORCHESTRALE D18371057	ETNICA - PHONICA
3	**1319082**	PUSH BUTTON - PULSANTE / 16A 250V	ORCHESTRALE D18371058	ETNICA - PHONICA
4	**1319240**	SWITCH - INTERRUTTORE / 3A 250V	ORCHESTRALE D18249	ETNICA - PHONICA

INTERRUTTORI ORCHESTRALE
SWITCHES ORCHESTRALE
SCHALTER ORCHESTRALE
INTERRUPTORES ORCHESTRALE

1

2

3

4

Photo	LF Code	Notes	Suitable for	For machine model
1	**1319505**	---	ORCHESTRALE D83180011R	ETNICA - PHONICA
2	**1319504**	---	ORCHESTRALE D18371079	ETNICA - PHONICA
3	**1319242**	---	ORCHESTRALE D15373059	ETNICA - PHONICA
4	**1319167**	---	ORCHESTRALE D15373060	ETNICA - PHONICA

INTERRUTTORI PAVONI
SWITCHES PAVONI
SCHALTER PAVONI
INTERRUPTORES PAVONI

1

2

3

4

5

6

Photo	LF Code	Notes	Suitable for	For machine model
1	**3319934**	SWITCH - INTERRUTTORE / 16A 250V	PAVONI 435071	BAR - BART - PUB
2	**3319944**	SWITCH - INTERRUTTORE / 16A 250V	PAVONI 435061	PROFESSIONAL - ROMANTICA
3	**3319012**	SWITCH - INTERRUTTORE / 16A 250V	PAVONI 435072	BAR - BART - PUB
4	**3319090**	SWITCH - INTERRUTTORE / 16A 250V	PAVONI 435073	BAR - BART - PUB
5	**5026971**	SWITCH - INTERRUTTORE / 16A 250V	PAVONI 435059	MIGNON
6	**1319128**	SWITCH - INTERRUTTORE / 16A 250V	PAVONI 435063	EUROPICCOLA - ROMANTICA

INTERRUTTORI PAVONI
SWITCHES PAVONI
SCHALTER PAVONI
INTERRUPTORES PAVONI

1

2

3

4

5

Photo	LF Code	Notes	Suitable for	For machine model
1	**3319948**	SWITCH - INTERRUTTORE / 16A 250V	PAVONI 435062	BAR
2	**1319005**	SWITCH - INTERRUTTORE / 16A 250V	PAVONI 0R14230030	MICROPOD
3	**3319222**	PUSH BUTTON - PULSANTE / 16A 250V	PAVONI 0R14230060	MICROPOD
4	**5066397**	SWITCH - INTERRUTTORE / 10A 250V	PAVONI 435008	CELLINI - DOMUSBAR
5	**1319651**	SWITCH - INTERRUTTORE / 10A 250V	PAVONI 435074	CELLINI - DOMUSBAR

INTERRUTTORI PAVONI
SWITCHES PAVONI
SCHALTER PAVONI
INTERRUPTORES PAVONI

1

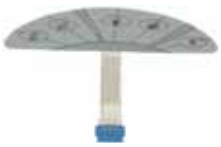
2

Photo	LF Code	Notes	Suitable for	For machine model
1	**1319316**	---	PAVONI 438300	CAFE
2	**5023969**	---	PAVONI 438320	BAR

INTERRUTTORI PROMAC
SWITCHES PROMAC
SCHALTER PROMAC
INTERRUPTORES PROMAC

1

2

3

Photo	LF Code	Notes	Suitable for	For machine model
1	**1319262**	SWITCH - INTERRUTTORE / 16A 250V	PROMAC 34030072	CLUB - COMPACT - GREEN
2	**1319805**	SWITCH - INTERRUTTORE / 16A 250V	PROMAC 34030073	COMPACT - GREEN
3	**1319263**	---	PROMAC 34070186	COMPACT - GREEN

INTERRUTTORI QUICK MILL
SWITCHES QUICK MILL
SCHALTER QUICK MILL
INTERRUPTORES QUICK MILL

1

2

3

4

Photo	LF Code	Notes	Suitable for	For machine model
1	**1319649**	CHANGE OVER SWITCH - DEVIATORE / 16A 250V	QUICK MILL IN0810PC	0820 - 0835
2	**1319605**	SWITCH - INTERRUTTORE / 16A 250V	QUICK MILL IN0810PV	0820
3	**1319215**	SWITCH - INTERRUTTORE / 16A 250V	QUICK MILL IN0810PA	0820 - 0835
4	**1319593**	SWITCH - INTERRUTTORE / 16A 250V	QUICK MILL IN0970B	0980 ANDREJA

INTERRUTTORI RANCILIO
SWITCHES RANCILIO
SCHALTER RANCILIO
INTERRUPTORES RANCILIO

1

2

3

4

5

6

Photo	LF Code	Notes	Suitable for	For machine model
1	**1319809**	SWITCH - INTERRUTTORE / 16A 250V	RANCILIO 34030047	FANTASY - SILVIA - S20
2	**1319862**	SWITCH - INTERRUTTORE / 16A 250V	RANCILIO 34030037	FANTASY - MILLENNIUM - SILVIA - S20
3	**1319806**	SWITCH - INTERRUTTORE / 16A 250V	RANCILIO 34030029	MILLENNIUM - SILVIA - S20
4	**1319805**	SWITCH - INTERRUTTORE / 16A 250V	RANCILIO 34030039	S20 - Z11
5	**1319865**	SWITCH - INTERRUTTORE / 16A 250V	RANCILIO 34030970	CLASSE10 - CLASSE6 - CLASSE7 - CLASSE9 - EPOCA
5	**1319902**	SWITCH - INTERRUTTORE / 16A 250V	RANCILIO 34030971	CLASSE7
6	**3319425**	SWITCH - INTERRUTTORE / 16A 250V	RANCILIO 34030069	EPOCA

INTERRUTTORI RANCILIO
SWITCHES RANCILIO
SCHALTER RANCILIO
INTERRUPTORES RANCILIO

1

2

Photo	LF Code	Notes	Suitable for	For machine model
1	**1319860**	SWITCH - INTERRUTTORE / 16A 250V	RANCILIO 10705356	MILLENNIUM
2	**5067116**	---	RANCILIO 10705783	CLASSE7

INTERRUTTORI RANCILIO
SWITCHES RANCILIO
SCHALTER RANCILIO
INTERRUPTORES RANCILIO

1

2

3

4

5

6

Photo	LF Code	Notes	Suitable for	For machine model
1	**1319105**	---	RANCILIO 10705364	CLASSE10
2	**1319113**	---	RANCILIO 10705361	CLASSE10
3	**1319114**	---	RANCILIO 10705365	CLASSE10
4	**1319115**	---	RANCILIO 10111036	EPOCA
5	**5044894**	---	RANCILIO 10111031	EPOCA
6	**1319803**	---	RANCILIO 10705226	S20 - Z11

INTERRUTTORI RDL
SWITCHES RDL
SCHALTER RDL
INTERRUPTORES RDL

1

2

3

Photo	LF Code	Notes	Suitable for	For machine model
1	**3319931**	SWITCH - INTERRUTTORE / 16A 250V	RDL14230040	MAXI - SWEET
2	**1319005**	SWITCH - INTERRUTTORE / 16A 250V	RDL 14230030	MINI - MINICAP
3	**3319222**	PUSH BUTTON - PULSANTE / 16A 250V	RDL 14230060	MAXI - MINI - SWEET

INTERRUTTORI RENEKA
SWITCHES RENEKA
SCHALTER RENEKA
INTERRUPTORES RENEKA

1

2

3

4

5

6

Photo	LF Code	Notes	Suitable for	For machine model
1	**1319331**	SWITCH - INTERRUTTORE / 10A 690V	RENEKA 9209042	VIVAS
2	**1319111**	---	RENEKA 9006806	VIVA - LC
3	**1319305**	---	RENEKA 9209045	VIVAE
4	**1319132**	---	RENEKA 9003548	LC
5	**1319302**	---	RENEKA 9006778	VIVA - LC
6	**1319299**	---	RENEKA 9509036	VIVAS

INTERRUTTORI ROYAL
SWITCHES ROYAL
SCHALTER ROYAL
INTERRUPTORES ROYAL

1

2

3

4

Photo	LF Code	Notes	Suitable for	For machine model
1	**3319933**	SWITCH - INTERRUTTORE / 16A 250V	ROYAL 5003080	DIADEMA
2	**1319713**	SWITCH - INTERRUTTORE / 16A 250V	ROYAL 5003010	VALLELUNGA
3	**1319687**	SWITCH - INTERRUTTORE / 16A 250V	ROYAL 5003235	VALLELUNGA
4	**1319561**	SWITCH - INTERRUTTORE / 16A 250V	ROYAL 5003230	DOGARESSA

INTERRUTTORI ROYAL
SWITCHES ROYAL
SCHALTER ROYAL
INTERRUPTORES ROYAL

1

2

3

4

5

Photo	LF Code	Notes	Suitable for	For machine model
1	**1319714**	---	BFC 5031350	SYNCHRO
2	**5074357**	---	BFC 5031370	SYNCHRO T2
3	**5073208**	---	BFC 5031011	DIADEMA - TECNICA
4	**5057512**	---	ROYAL 5031015	DIADEMA - DOGARESSA - TECNICA
5	**1319694**	---	ROYAL 5031210	DIADEMA

INTERRUTTORI SAB ITALIA
SWITCHES SAB ITALIA
SCHALTER SAB ITALIA
INTERRUPTORES SAB ITALIA

1

2

3

Photo	LF Code	Notes	Suitable for	For machine model
1	**3319948**	SWITCH - INTERRUTTORE / 16A 250V	SAB ITALIA SVMNI001	ELLIPSE
2	**1319497**	---	SAB ITALIA SVTMP032	E96
3	**1319496**	---	SAB ITALIA SVECP003	JOLLY

INTERRUTTORI SAECO
SWITCHES SAECO
SCHALTER SAECO
INTERRUPTORES SAECO

1

2

3

4

5

6

Photo	LF Code	Notes	Suitable for	For machine model
1	**1319377**	SWITCH - INTERRUTTORE / 16A 250V	SAECO 5332003000	VIAVENEZIA
2	**1319542**	SWITCH - INTERRUTTORE / 16A 250V	SAECO WGA5001001000	AROMA
3	**1319544**	SWITCH - INTERRUTTORE / 16A 250V	SAECO WGA5302001000	AROMA - ARMONIA
4	**1319547**	PUSH BUTTON - PULSANTE / 16A 250V	SAECO WGA5001009000	AROMA
5	**1319376**	SWITCH - INTERRUTTORE / 16A 250V	SAECO 5332004000	AROMA - NINA - NINABAR
6	**3319948**	SWITCH - INTERRUTTORE / 16A 250V	SAECO WGADM2104	AROMA

INTERRUTTORI SAECO
SWITCHES SAECO
SCHALTER SAECO
INTERRUPTORES SAECO

1

2

3

4

5

Photo	LF Code	Notes	Suitable for	For machine model
1	**1319382**	SWITCH - INTERRUTTORE / 16A 250V	SAECO NE03.038	EASY - INCANTO - MAGICCOMFORT - ROYAL - SYNTIA
2	**1319562**	---	SAECO WGA4001080000	AROMA
3	**1319578**	---	SAECO WGA6003016000	AROMA
4	**1319528**	---	SAECO WGA8003007000	AROMA
5	**1319682**	---	SAECO 17000434	ROYAL NEW

INTERRUTTORI SAECO
SWITCHES SAECO
SCHALTER SAECO
INTERRUPTORES SAECO

1

2

3

Photo	LF Code	Notes	Suitable for	For machine model
1	**1319274**	PUSH BUTTON - PULSANTE / 16A 250V	SAECO 183650750	FAMILY
2	**3319295**	SWITCH - INTERRUTTORE / 16A 250V	SAECO 186051800	AROMA
3	**3319310**	SWITCH - INTERRUTTORE / 16A 250V	SAECO 242212625104	MINUTO

INTERRUTTORI SAN MARCO
SWITCHES SAN MARCO
SCHALTER SAN MARCO
INTERRUPTORES SAN MARCO

1

2

3

4

5

6

Photo	LF Code	Notes	Suitable for	For machine model
1	**3319029**	SWITCH - INTERRUTTORE / 16A 250V	SAN MARCO 108108V	95
2	**3319296**	SWITCH - INTERRUTTORE / 16A 250V	SAN MARCO 108539	85
3	**1319268**	SWITCH - INTERRUTTORE / 16A 250V	SAN MARCO 108675	100
4	**1319674**	SWITCH - INTERRUTTORE / 16A 250V	SAN MARCO 108674	85 FLEXA-E
5	**1319266**	---	SAN MARCO 106729	NEW 105 - 100
6	**1319269**	---	SAN MARCO 106705	100

INTERRUTTORI SAN MARCO
SWITCHES SAN MARCO
SCHALTER SAN MARCO
INTERRUPTORES SAN MARCO

1

2

3

4

5

6

Photo	LF Code	Notes	Suitable for	For machine model
1	**1319553**	---	SAN MARCO 108451	95
2	**1319567**	---	SAN MARCO 106130	95
3	**1319566**	---	SAN MARCO 106133	95
4	**1319118**	---	SAN MARCO 106116	95
5	**1319572**	---	SAN MARCO 106109	95
6	**1319119**	---	SAN MARCO 2255.005	95

INTERRUTTORI SAN MARCO
SWITCHES SAN MARCO
SCHALTER SAN MARCO
INTERRUPTORES SAN MARCO

1

2

3

4

Photo	LF Code	Notes	Suitable for	For machine model
1	**1319556**	---	SAN MARCO 608066	85
2	**1319557**	---	SAN MARCO 608067	85
3	**1319255**	---	SAN MARCO 108540	85
4	**1319558**	---	SAN MARCO 108296	85

INTERRUTTORI SAN MARCO
SWITCHES SAN MARCO
SCHALTER SAN MARCO
INTERRUPTORES SAN MARCO

1

2

3

4

5

Photo	LF Code	Notes	Suitable for	For machine model
1	**1319254**	---	SAN MARCO 108682	100E
2	**1319555**	---	SAN MARCO 108406	95
3	**1319135**	---	SAN MARCO 108408	95
4	**1319576**	---	SAN MARCO 108760	105
5	**1319575**	---	SAN MARCO 108762	105

INTERRUTTORI SAN MARCO
SWITCHES SAN MARCO
SCHALTER SAN MARCO
INTERRUPTORES SAN MARCO

1

2

3

4

5

Photo	LF Code	Notes	Suitable for	For machine model
1	**1319270**	---	SAN MARCO 106724	100E
2	**1319265**	---	SAN MARCO 106725	100
3	**1319573**	---	SAN MARCO 106485	105
4	**1319258**	---	SAN MARCO 106487	105
5	**1319574**	---	SAN MARCO 106486	105

INTERRUTTORI SANREMO
SWITCHES SANREMO
SCHALTER SANREMO
INTERRUPTORES SANREMO

1

2

3

4

5

6

Photo	LF Code	Notes	Suitable for	For machine model
1	**5036032**	SWITCH - INTERRUTTORE / 16A 250V	SANREMO 10555060C	CAPRI - MILANO LX - PISA - VENEZIA
2	**1319631**	SWITCH - INTERRUTTORE / 15A 250V	SANREMO 10553060	TREVISO - TREVISOLX
3	**5032976**	---	SANREMO 10112087B	MILANO LX
4	**1319629**	---	SANREMO 10112122	AMALFI
5	**5031483**	---	SANREMO 10112066A	CAPRI
6	**5074250**	---	SANREMO 10112268D	TORINO - ZOE

INTERRUTTORI SCALA
SWITCHES SCALA
SCHALTER SCALA
INTERRUPTORES SCALA

1

2

3

4

Photo	LF Code	Notes	Suitable for	For machine model
1	**1319364**	SWITCH - INTERRUTTORE / 16A 250V	SCALA C-0239	NORMA
2	**3319813**	SWITCH - INTERRUTTORE / 16A 250V	SCALA C-0240	NORMA
3	**1319104**	CHANGE OVER SWITCH - DEVIATORE / 16A 250V	SCALA C-0474	BUTTERFLY - CARMEN - EROICA
4	**1319005**	SWITCH - INTERRUTTORE / 15A 250V	SCALA C-0485	CARMEN

INTERRUTTORI SCALA
SWITCHES SCALA
SCHALTER SCALA
INTERRUPTORES SCALA

1

2

3

4

Photo	LF Code	Notes	Suitable for	For machine model
1	**1319099**	---	SCALA C-0461	CARMEN
2	**5048372**		SCALA C-0462	CARMEN
3	**1319636**	---	SCALA C-0603	BUTTERFLY
4	**5064506**		SCALA C-0602	EROICA

INTERRUTTORI SPAZIALE
SWITCHES SPAZIALE
SCHALTER SPAZIALE
INTERRUPTORES SPAZIALE

1

2

3

4

5

6

Photo	LF Code	Notes	Suitable for	For machine model
1	**1319005**	SWITCH - INTERRUTTORE / 16A 250V	SPAZIALE 06619	S3
2	**1319220**	PUSH BUTTON - PULSANTE / 0.1A 20V	SPAZIALE 05825	S3
3	**1319218**	PUSH BUTTON - PULSANTE / 12A 250V	SPAZIALE 04953	SELETRON PLUS
4	**1319221**	---	SPAZIALE 06297	S3
5	**1319222**	---	SPAZIALE 08500	S5 - S5 COMPACT
6	**1319756**	---	SPAZIALE 05498	S3EK - S3SELETRON

INTERRUTTORI SPAZIALE
SWITCHES SPAZIALE
SCHALTER SPAZIALE
INTERRUPTORES SPAZIALE

1

2

3

4

5

6

Photo	LF Code	Notes	Suitable for	For machine model
1	**1319751**	---	SPAZIALE 01598	SELETRON
2	**1319752**	---	SPAZIALE 01521	SELETRON
3	**1319758**	---	SPAZIALE 02474	NEW EK
4	**1319750**	---	SPAZIALE 02475	NEW EK
5	**1319223**	---	SPAZIALE 08494	S5 - S5 COMPACT
6	**1319227**	---	SPAZIALE 08568	S5 - S5 COMPACT

INTERRUTTORI SPAZIALE
SWITCHES SPAZIALE
SCHALTER SPAZIALE
INTERRUPTORES SPAZIALE

1

2

3

4

5

Photo	LF Code	Notes	Suitable for	For machine model
1	**1319667**	---	SPAZIALE 10664	S2 - S2 SPAZIO
2	**1319668**	---	SPAZIALE 10544	S2 - S2 SPAZIO
3	**1319669**	---	SPAZIALE 10663	S2 - S2 SPAZIO
4	**1319670**	---	SPAZIALE 10543	S2 - S2 SPAZIO
5	**5062332**	---	SPAZIALE 10583	S2 - S2 SPAZIO

INTERRUTTORI SPAZIALE
SWITCHES SPAZIALE
SCHALTER SPAZIALE
INTERRUPTORES SPAZIALE

1

2

3

4

5

6

Photo	LF Code	Notes	Suitable for	For machine model
1	**1319672**	---	SPAZIALE 10782	S8 - S8 COMPACT - S9 - S9 COMPACT
2	**5064349**	---	SPAZIALE 08569	S5 - S5 COMPACT - S8 - S8 COMPACT - S9 - S9 COMPACT
3	**1319671**	---	SPAZIALE 10774	S8 - S8 COMPACT - S9 - S9 COMPACT
4	**5069177**	---	SPAZIALE 10586	S8 - S8 COMPACT - S9 - S9 COMPACT
5	**5057750**	---	SPAZIALE 09774	S40
6	**5057751**	---	SPAZIALE 09801	S40

INTERRUTTORI SPINEL
SWITCHES SPINEL
SCHALTER SPINEL
INTERRUPTORES SPINEL

1

2

3

4

Photo	LF Code	Notes	Suitable for	For machine model
1	**1319604**	SWITCH - INTERRUTTORE / 16A 250V	SPINEL SR.000.041.000	DUETTO - ESSE - ESSELUX - MINIMINI - MINIMINILUX
2	**1319605**	SWITCH - INTERRUTTORE / 16A 250V	SPINEL SR.000.041.002	DUETTO - ESSE - ESSELUX - MINIMINI - MINIMINILUX
3	**1319606**	SWITCH - INTERRUTTORE / 16A 250V	SPINEL SR.000.068.000	DUETTO - ESSE - MINIMINI - MINIMINILUX
4	**1319215**	SWITCH - INTERRUTTORE / 16A 250V	SPINEL SR.000.041.001	DUETTO - DUETTOLUX - ESSE - ESSELUX - MINIMINI

INTERRUTTORI SPINEL
SWITCHES SPINEL
SCHALTER SPINEL
INTERRUPTORES SPINEL

1

2

3

4

Photo	LF Code	Notes	Suitable for	For machine model
1	**3319618**	CHANGE OVER SWITCH - DEVIATORE / 16A 250V	SPINEL SR.000.041.004	---
2	**1319005**	SWITCH - INTERRUTTORE / 16A 250V	SPINEL SR.000.041.003	FLAVIA - LOLA - LOLAELITE - LOLITA - LOLITAELITE
3	**1319082**	PUSH BUTTON - PULSANTE / 16A 250V	SPINEL SR.000.068.009	LOLA - LOLITA - PINOCCHIO
4	**1319607**	---	SPINEL SR.000.088.007	LOLA - LOLITA - PINOCCHIO - RONDO

INTERRUTTORI VFA
SWITCHES VFA
SCHALTER VFA
INTERRUPTORES VFA

1

2

Photo	LF Code	Notes	Suitable for	For machine model
1	**1319464**	SWITCH - INTERRUTTORE / 16A 250V	VFA 514401	---
2	**3319654**	---	VFA 214604N	---

INTERRUTTORI VIBIEMME
SWITCHES VIBIEMME
SCHALTER VIBIEMME
INTERRUPTORES VIBIEMME

1

2

3

4

5

6

Photo	LF Code	Notes	Suitable for	For machine model
1	**3319529**	SWITCH - INTERRUTTORE / 16A 250V	VIBIEMME ELETINTBIPSIN	SILVER
2	**1319591**	SWITCH - INTERRUTTORE / 16A 250V	VIBIEMME ELETPULINTKOR	LOLLO
3	**3319501**	---	VIBIEMME MACCCOVPVCVB	---
4	**1319594**	SWITCH - INTERRUTTORE / 16A 250V	VIBIEMME ELETPULCMDOM	DOSAPLUS - REPLICA
5	**1319561**	SWITCH - INTERRUTTORE / 16A 250V	VIBIEMME ELETPULCMDOMT	KOMETA - MERCURY - MINIMAX
6	**1319593**	SWITCH - INTERRUTTORE / 16A 250V	VIBIEMME ELETINTLEVMET	DOMOBARJUNIOR

INTERRUTTORI VIBIEMME
SWITCHES VIBIEMME
SCHALTER VIBIEMME
INTERRUPTORES VIBIEMME

1

2

3

4

Photo	LF Code	Notes	Suitable for	For machine model
1	**1319005**	SWITCH - INTERRUTTORE / 16A 250V	VIBIEMME ELETPULBIPDOR	DOMOBARSUPER - EVOLUTION - REPLICA - REVOLUTION
2	**3319948**	SWITCH - INTERRUTTORE / 16A 250V	VIBIEMME ELETINTGLUSE	DOMOBAR - DOSAPLUS - KOMETA - MERCURY - SILVER
3	**1319590**	---	VIBIEMME ELETPUL1LED2T	LOLLO
4	**1319589**	---	VIBIEMME ELETPUL5LED5T	LOLLO

INTERRUTTORI VIBIEMME
SWITCHES VIBIEMME
SCHALTER VIBIEMME
INTERRUPTORES VIBIEMME

1

2

3

4

5

6

Photo	LF Code	Notes	Suitable for	For machine model
1	**1319440**	---	VIBIEMME ELETPUL1LEDNE	EVOLUTION - REVOLUTION
2	**1319149**	---	VIBIEMME ELETPUL1LEDKO	KOMETA
3	**1319139**	---	VIBIEMME ELETPUL5LEDAL	DOSAPLUS
4	**1319148**	---	VIBIEMME ELETPUL1LEDAL	DOMOBARSUPER - MERCURY - MINIMAX
5	**1319588**	---	VIBIEMME ELETPUL6T1LDT	CUBO - REPLICA
6	**1319595**	---	VIBIEMME ELETPULTASCRD	DOMOBARSUPER - EVOLUTION - REPLICA - REVOLUTION

INTERRUTTORI VICTORIA ARDUINO
SWITCHES VICTORIA ARDUINO
SCHALTER VICTORIA ARDUINO
INTERRUPTORES VICTORIA ARDUINO

1

2

3

4

5

Photo	LF Code	Notes	Suitable for	For machine model
1	**1319092**	SWITCH - INTERRUTTORE / 16A 250V	VICTORIA ARDUINO 04200051	VENUS FAMILY
2	**1319428**	---	VICTORIA ARDUINO 40400007	VENUSBAR
3	**1319427**	---	VICTORIA ARDUINO 04900753	ADONIS
4	**1319429**	---	VICTORIA ARDUINO 04900119	ADONIS
5	**5085384**	---	VICTORIA ARDUINO 04901160	VA388 BLACK EAGLE

INTERRUTTORI VISACREM
SWITCHES VISACREM
SCHALTER VISACREM
INTERRUPTORES VISACREM

1

2

3

4

5

Photo	LF Code	Notes	Suitable for	For machine model
1	**1319064**	---	VISACREM 08274201	NERA
2	**1319069**	---	VISACREM 08274409	NERA
3	**1319065**	---	VISACREM 08272205	NERA
4	**1319638**	---	VISACREM 08427600	NERA
5	**3319035**	---	VISACREM 07967010	BRAVA - NERA

INTERRUTTORI WEGA
SWITCHES WEGA
SCHALTER WEGA
INTERRUPTORES WEGA

1

2

3

4

5

Photo	LF Code	Notes	Suitable for	For machine model
1	**3319296**	SWITCH - INTERRUTTORE / 16A 250V	WEGA WY18263	AIRY - ATLAS - ATLAS 10 - COMBI NOVA - FORMULA MILANO
2	**3319931**	SWITCH - INTERRUTTORE / 16A 250V	WEGA WY18262	AIRY - ATLAS - COLOSSEUM - COMBI NOVA - ESPRESSA
3	**3319016**	SWITCH - INTERRUTTORE / 16A 250V	WEGA WY18260	AIRY - ATLAS - COLOSSEUM - COMBI NOVA - ESPRESSA
4	**1319492**	PUSH BUTTON - PULSANTE / 16A 250V	WEGA WY18245	AIRY - ATLAS - COLOSSEUM - COMBI NOVA - ESPRESSA
5	**3319948**	SWITCH - INTERRUTTORE / 16A 250V	WEGA W10963	---

INTERRUTTORI WEGA
SWITCHES WEGA
SCHALTER WEGA
INTERRUPTORES WEGA

1

2

3

4

5

6

Photo	LF Code	Notes	Suitable for	For machine model
1	**1319005**	SWITCH - INTERRUTTORE / 16A 250V	WEGA WY18371057	POLARIS - VELA - VENUS
2	**1319082**	PUSH BUTTON - PULSANTE / 16A 250V	WEGA WY18371058	POLARIS - VELA - VENUS
3	**1319240**	SWITCH - INTERRUTTORE / 3A 250V	WEGA WY22723C	AIRY - ATLAS - COLOSSEUM - COMBI NOVA - ESPRESSA
4	**3319482**	---	WEGA WY15373057	VENUS
5	**1319167**	---	WEGA WY15373060	POLARIS - VELA
6	**1319081**	---	WEGA WY15373048	SPHERA

INTERRUTTORI WEGA
SWITCHES WEGA
SCHALTER WEGA
INTERRUPTORES WEGA

1

2

3

4

5

6

Photo	LF Code	Notes	Suitable for	For machine model
1	**1319237**	---	WEGA WY18371042	SPHERA
2	**1319238**	---	WEGA WY18371043	SPHERA
3	**1319086**	---	WEGA WY18371044	SPHERA
4	**1319084**	---	WEGA WY18371046	SPHERA
5	**1319085**	---	WEGA WY18371045	SPHERA
6	**1319083**	---	WEGA WY18371041	SPHERA

INTERRUTTORI WEGA
SWITCHES WEGA
SCHALTER WEGA
INTERRUPTORES WEGA

1

2

3

4

5

6

Photo	LF Code	Notes	Suitable for	For machine model
1	**1319852**	---	WEGA WY18357	JUNIOR - NOVA
2	**1319851**	230V	WEGA WY18362	AIRY - ATLAS - COMBI NOVA - FORMULA MILANO - JUNIOR
2	**1319850**	115V	WEGA WY18363	AIRY - ATLAS - COMBI NOVA - FORMULA MILANO - JUNIOR
3	**1319169**	---	WEGA WY18371049	ATLAS - COLOSSEUM - ESPRESSA - ORION ECO - START
4	**1319451**	---	WEGA WY18365	EURO 2000
5	**1319452**	---	WEGA WY18354	---
6	**5038895**	---	WEGA WY18371064	ATLAS - PEGASO

INTERRUPTORI WEGA
SWITCHES WEGA
SCHALTER WEGA
INTERRUPTORES WEGA

1

2

3

4

5

6

Photo	LF Code	Notes	Suitable for	For machine model
1	**1319493**	---	WEGA WY18371027	MININOVA
2	**1319168**	---	WEGA WY20126014	POLARIS
3	**1319239**	---	WEGA WY29169118	VELA
4	**1319505**	---	WEGA WY83180011R	CONCEPT
5	**1319504**	---	WEGA WY18371079	CONCEPT
6	**1319242**	---	WEGA WY15373059	CONCEPT

CAFFETTIERE INOX 18/10 G.A.T. SERIE PRATIKA
S/STEEL 18/10 COFFEE POTS G.A.T. SERIES PRATIKA
KAFFEEKANNEN AUS EDELSTAHL 18/10 G.A.T. SERIE PRATIKA
JARRAS PARA CAFÉ INOX 18/10 G.A.T. SERIE PRATIKA

LF Code	Capacity (L)
1024051	0,6
1024052	0,7

Personalizzabili
Customizable
personalisierbar
Personalizables

LATTIERE INOX 18/10 G.A.T. SERIE PRATIKA
S/STEEL 18/10 MILK JUGS G.A.T. SERIES PRATIKA
MILCHKÄNNCHEN AUS EDELSTAHL 18/10 G.A.T. SERIE PRATIKA
JARRAS LECHERAS INOX 18/10 G.A.T. SERIE PRATIKA

LF Code	Capacity (L)
1024001	0,2
1024002	0,3
1024003	0,45
1024004	0,6
1024005	0,7
1024006	1,1

Personalizzabili
Customizable
personalisierbar
Personalizables

LATTIERE INOX 18/10 SERIE RIVESTITA IN GOMMA
MILK PITCHERS S/STEEL 18/10 RUBBER COATED
MILCHKÄNNCHEN EDELSTAHL 18/10 GUMMI BESCHICHTET
LECHERAS ACERO INOX 18/10 RECUBIERTAS DE GOMA

LF Code	Capacity (L)
1224100	0,35
1224102	0,60

Personalizzabili
Customizable
personalisierbar
Personalizables

LATTIERE INOX Aisi 202 FINITURA SPECCHIO
MILK PITCHERS S/STEEL Aisi 202 MIRROR POLISHING
MILCHKÄNNCHEN EDELSTAHL Aisi 202 HOCHGLANZPOLIERT
LECHERAS ACERO INOX Aisi 202 ACABADO EN ESPEJO

made outside the EU

LF Code	Capacity (L)
1224900	0.10
1224901	0.35
1224902	0.60
1224903	1.0
1224904	1.5

Personalizzabili
Customizable
personalisierbar
Personalizables

LATTIERE INOX Aisi 202 NERE RIVESTITE IN PTFE
MILK PITCHERS STAINLESS STEEL Aisi 202 BLACK PTFE COATED
MILCHKÄNNCHEN EDELSTAHL Aisi 202 SCHWARZ PTFE BESCHICHTET
LECHERAS ACERO INOX Aisi 202 NEGRO PTFE RECUBIERTAS

made outside the EU

LF Code	Capacity (L)
1224941	0.10
1224911	0.35
1224912	0.60
1224913	1.0

Personalizzabili
Customizable
personalisierbar
Personalizables

LATTIERE INOX Aisi 304 ILSA SERIE ÉVOLUTION
MILK PITCHERS ST. STEEL Aisi 304 ILSA SERIES ÉVOLUTION
MILCHKÄNNCHEN AUS EDELSTAHL Aisi 304 ILSA SERIE ÉVOLUTION
JARRAS LECHERA INOX Aisi 304 ILSA SERIE ÉVOLUTION

LF Code	Capacity (L)
1224030	0,35
1224031	0,50
1224032	0,75

Personalizzabili
Customizable
personalisierbar
Personalizables

LATTIERE INOX Aisi 304 MOTTA SERIE AURORA
MILK PITCHERS STAINLESS STEEL Aisi 304 MOTTA SERIE AURORA
MILCHKÄNNCHEN EDELSTAHL Aisi 304 MOTTA SERIE AURORA
JARRAS LECHERA INOX Aisi 304 MOTTA SERIE AURORA

LF Code	Capacity (L)
1224021	0,25
1224022	0,35
1224023	0,5
1224024	0,75
1224025	1
1224026	1,5

Personalizzabili
Customizable
personalisierbar
Personalizables

LATTIERE INOX Aisi 304 MOTTA SERIE EUROPA
Aisi 304 S/STEEL MILK JUGS MOTTA SERIES EUROPA
MILCHKÄNNCHEN EDELSTAHL Aisi 304 MOTTA SERIE EUROPA
LECHERAS INOX Aisi 304 MOTTA SERIE EUROPA

LF Code	Capacity (L)
1224014	0,25
1224015	0,35
1224010	0,5
1224011	0,75
1224012	1
1224013	1,5

Personalizzabili
Customizable
personalisierbar
Personalizables

LATTIERE INOX Aisi 304 MOTTA SERIE EUROPA VERNICIATE
Aisi 304 S/STEEL MILK JUGS MOTTA SERIES EUROPA PAINTED
MILCHKÄNNCHEN AUS EDELSTAHL Aisi 304 MOTTA SERIE EUROPA GEMALT
JARRAS LECHERAS INOX Aisi 304 MOTTA SERIE EUROPA PINTADAS

1

2

3

4

5

Photo	LF Code	Capacity (L)
1	**5057755**	0,35
1	**1224050**	0,5
1	**1224051**	0,75
2	**5057732**	0,35
2	**1224060**	0,5
2	**1224061**	0,75
3	**5079888**	0,35
3	**1224070**	0,5
3	**1224073**	0,75
4	**5079890**	0,35
4	**1224071**	0,5
4	**1224072**	0,75
5	**5068128**	0,35
5	**5066908**	0,5
5	**5066909**	0,75

Personalizzabili
Customizable
personalisierbar
Personalizables

LATTIERE INOX Aisi 304 MOTTA SERIE TULIP VERNICIATE
Aisi 304 S/STEEL MILK JUGS MOTTA SERIES TULIP PAINTED
MILCHKÄNNCHEN AUS EDELSTAHL Aisi 304 MOTTA SERIE TULIP GEMALT
JARRAS LECHERAS INOX Aisi 304 MOTTA SERIE TULIP PINTADAS

LF Code	Capacity (L)
1224018	0.50
1224019	0.50
1224020	0.50

Personalizzabili
Customizable
personalisierbar
Personalizables

LAVA LATTIERE
MILK JUG WASHER
MILCHGIESSERREINIGER
LIMPIA LECHERAS

1

2

Photo	LF Code	Dimensions (mm)	Mounting hole (mm)
1	**1224016**	175x162x127	155x140
2	**1224017**	175x162x127	---

TERMOMETRI PER LATTIERE
THERMOMETERS FOR MILK JUGS
THERMOMETER FÜR MILCHGIESSER
TERMÓMETROS PARA JARRAS LECHERAS

1

2

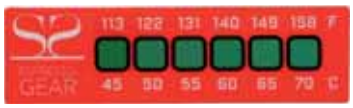

3

Photo	LF Code	Dimensions (mm)	Temperature range (°C)
1	**1394553**	ø 25	0+100
2	**1394554**	ø 45	0+100
3	**1394004**	---	45+70

1 E 2 Personalizzabili
1 AND 2 Customizable
1 UND 2 personalisierbar
1 Y 2 Personalizables

ASTORIA CMA

1251125

COPPIA MACINE ASTORIA-MAHLKONIG SX
ø esterno 65 mm - ø interno 38 mm
spessore 8,4 mm - 2 fori fissaggio
ORIGINALE

GRINDING BURRS PAIR ASTORIA-MAHLKONIG LH
external ø 65 mm - internal ø 38 mm
thickness 8.4 mm - 2 fixing holes
ORIGINAL

MAHLSCHEIBENPAAR ASTORIA-MAHLKONIG L
Aussen-ø 65 mm - Innen-ø 38 mm
Dicke 8,4 mm - 2 Befestigungslöcher
ORIGINAL

PAREJA FRESAS ASTORIA-MAHLKONIG IZQ
ø exterior 65 mm - ø interior 38 mm
espesor 8,4 mm - 2 agujeros de anclaje
ORIGINAL

ASTORIA CMA 28530000 ASTORIA CMA 28530001 ASTORIA CMA 28530002

1251225

COPPIA MACINE ASTORIA-MAHLKONIG SX
ø esterno 65 mm - ø interno 38 mm
spessore 8,4 mm - 2 fori fissaggio

GRINDING BURRS PAIR ASTORIA-MAHLKONIG LH
external ø 65 mm - internal ø 38 mm
thickness 8.4 mm - 2 fixing holes

MAHLSCHEIBENPAAR ASTORIA-MAHLKONIG L
Aussen-ø 65 mm - Innen-ø 38 mm
Dicke 8,4 mm - 2 Befestigungslöcher

PAREJA FRESAS ASTORIA-MAHLKONIG IZQ
ø exterior 65 mm - ø interior 38 mm
espesor 8,4 mm - 2 agujeros de anclaje

ASTORIA CMA

1251142

COPPIA MACINE COMPAK CONICA DX
ø esterno 68/49 mm - ø interno 41/13 mm
spessore 25 mm - 4 fori di fissaggio

GRINDING BURRS PAIR COMPAK CONIC RH
external ø 68/49 mm - internal ø 41/13 mm
thickness 25 mm - 4 fixing holes

MAHLSCHEIBENPAAR COMPAK KEGELF. R
Aussen-ø 68/49 mm - Innen-ø 41/13 mm
Dicke 25 mm - 4 Befestigungslöcher

PAREJA FRESAS COMPAK CÓNICA DCHA
ø exterior 68/49 mm - ø interior 41/13 mm
espesor 25 mm - 4 agujeros de anclaje

ASTORIA CMA 28217016

1251137

COPPIA MACINE COMPAK DX
ø esterno 54 mm - ø interno 32 mm
spessore 8,5 mm - 3 fori fissaggio

GRINDING BURRS PAIR COMPAK RH
external ø 54 mm - internal ø 32 mm
thickness 8.5 mm - 3 fixing holes

MAHLSCHEIBENPAAR COMPAK R
Aussen-ø 54 mm - Innen-ø 32 mm
Dicke 8,5 mm - 3 Befestigungslöcher

PAREJA FRESAS COMPAK DCHA
ø exterior 54 mm - ø interior 32 mm
espesor 8,5 mm - 3 agujeros de anclaje

ASTORIA CMA 28217013

1251138

COPPIA MACINE COMPAK DX
ø esterno 58 mm - ø interno 33 mm
spessore 8,5 mm - 3 fori fissaggio

GRINDING BURRS PAIR COMPAK RH
external ø 58 mm - internal ø 33 mm
thickness 8.5 mm - 3 fixing holes

MAHLSCHEIBENPAAR COMPAK R
Aussen-ø 58 mm - Innen-ø 33 mm
Dicke 8,5 mm - 3 Befestigungslöcher

PAREJA FRESAS COMPAK DCHA
ø exterior 58 mm - ø interior 33 mm
espesor 8,5 mm - 3 agujeros de anclaje

ASTORIA CMA 28217014

1251140

COPPIA MACINE COMPAK DX
ø esterno 82,5 mm - ø interno 49 mm
spessore 9,5 mm - 3 fori fissaggio

MAHLSCHEIBENPAAR COMPAK R
Aussen-ø 82,5 mm - Innen-ø 49 mm
Dicke 9,5 mm - 3 Befestigungslöcher

GRINDING BURRS PAIR COMPAK RH
external ø 82.5 mm - internal ø 49 mm
thickness 9.5 mm - 3 fixing holes

PAREJA FRESAS COMPAK DCHA
ø exterior 82,5 mm - ø interior 49 mm
espesor 9,5 mm - 3 agujeros de anclaje

ASTORIA CMA 28217011

1251501

COPPIA MACINE COMPAK DX
ø esterno 60 mm - ø interno 36 mm
spessore 8 mm - 3 fori di fissaggio

MAHLSCHEIBENPAAR COMPAK R
Aussen-ø 60 mm - Innen-ø 36 mm
Dicke 8 mm - 3 Befestigungslöcher

GRINDING BURRS PAIR COMPAK RH
external ø 60 mm - internal ø 36 mm
thickness 8 mm - 3 fixing holes

PAREJA FRESAS COMPAK DCHA
ø exterior 60 mm - ø interior 36 mm
espesor 8 mm - 3 agujeros de anclaje

ASTORIA CMA 28217006

1251503

COPPIA MACINE COMPAK DX
ø esterno 75 mm - ø interno 43 mm
spessore 10,5 mm - 3 fori di fissaggio

MAHLSCHEIBENPAAR COMPAK R
Aussen-ø 75 mm - Innen-ø 43 mm
Dicke 10,5 mm - 3 Befestigungslöcher

GRINDING BURRS PAIR COMPAK RH
external ø 75 mm - internal ø 43 mm
thickness 10.5 mm - 3 fixing holes

PAREJA FRESAS COMPAK DCHA
ø exterior 75 mm - ø interior 43 mm
espesor 10,5 mm - 3 agujeros de anclaje

ASTORIA CMA 28217002

1251093

COPPIA MACINE COMPAK-WEGA DX
ø esterno 80 mm - ø interno 41 mm
spessore 10 mm - 3 fori di fissaggio

MAHLSCHEIBENPAAR COMPAK-WEGA R
Aussen-ø 80 mm - Innen-ø 41 mm
Dicke 10 mm - 3 Befestigungslöcher

GRINDING BURRS PAIR COMPAK-WEGA RH
external ø 80 mm - internal ø 41 mm
thickness 10 mm - 3 fixing holes

PAREJA FRESAS COMPAK-WEGA DCHA
ø exterior 80 mm - ø interior 41 mm
espesor 10 mm - 3 agujeros de anclaje

ASTORIA CMA 28217005

1251504

COPPIA MACINE COMPAK-WEGA DX
ø esterno 63,5 mm - ø interno 38 mm
spessore 9 mm - 3 fori di fissaggio

MAHLSCHEIBENPAAR COMPAK-WEGA R
Aussen-ø 63,5 mm - Innen-ø 38 mm
Dicke 9 mm - 3 Befestigungslöcher

GRINDING BURRS PAIR COMPAK-WEGA RH
external ø 63.5 mm - internal ø 38 mm
thickness 9 mm - 3 fixing holes

PAREJA FRESAS COMPAK-WEGA DCHA
ø exterior 63,5 mm - ø interior 38 mm
espesor 9 mm - 3 agujeros de anclaje

ASTORIA CMA 28217000

1251927

COPPIA MACINE MAZZER MONOFASE DX
ø esterno 83 mm - ø interno 49 mm
spessore 9,6 mm - 3 fori di fissaggio

MAHLSCHEIBENPAAR MAZZER 1-PH. R
Aussen-ø 83 mm - Innen-ø 49 mm
Dicke 9,6 mm - 3 Befestigungslöcher

GRINDING BURRS PAIR MAZZER 1-PH. RH
external ø 83 mm - internal ø 49 mm
thickness 9.6 mm - 3 fixing holes

PAREJA FRESAS MAZZER MONOF. DCHA
ø exterior 83 mm - ø interior 49 mm
espesor 9,6 mm - 3 agujeros de anclaje

ASTORIA CMA 28215

1251929

COPPIA MACINE MAZZER MONOFASE DX
ø esterno 64 mm - ø interno 37 mm
spessore 8,4 mm - 3 fori di fissaggio

MAHLSCHEIBENPAAR MAZZER 1-PH. R
Aussen-ø 64 mm - Innen-ø 37 mm
Dicke 8,4 mm - 3 Befestigungslöcher

GRINDING BURRS PAIR MAZZER 1-PH. RH
external ø 64 mm - internal ø 37 mm
thickness 8.4 mm - 3 fixing holes

PAREJA FRESAS MAZZER MONOF. DCHA
ø exterior 64 mm - ø interior 37 mm
espesor 8,4 mm - 3 agujeros de anclaje

ASTORIA CMA 28213

1251056

COPPIA MACINE MAZZER TRIFASE DX
ø esterno 64 mm - ø interno 37 mm
spessore 9 mm - 3 fori di fissaggio

MAHLSCHEIBENPAAR MAZZER 3-PH. R
Aussen-ø 64 mm - Innen-ø 37 mm
Dicke 9 mm - 3 Befestigungslöcher

GRINDING BURRS PAIR MAZZER 3-PH. RH
external ø 64 mm - internal ø 37 mm
thickness 9 mm - 3 fixing holes

PAREJA FRESAS MAZZER TRIF. DCHA
ø exterior 64 mm - ø interior 37 mm
espesor 9 mm - 3 agujeros de anclaje

ASTORIA CMA 28213

1251930

COPPIA MACINE MAZZER TRIFASE DX
ø esterno 64 mm - ø interno 37 mm
spessore 8,4 mm - 3 fori di fissaggio

MAHLSCHEIBENPAAR MAZZER 3-PH. R
Aussen-ø 64 mm - Innen-ø 37 mm
Dicke 8,4 mm - 3 Befestigungslöcher

GRINDING BURRS PAIR MAZZER 3-PH. RH
external ø 64 mm - internal ø 37 mm
thickness 8.4 mm - 3 fixing holes

PAREJA FRESAS MAZZER TRIF. DCHA
ø exterior 64 mm - ø interior 37 mm
espesor 8,4 mm - 3 agujeros de anclaje

ASTORIA CMA 28213001

1251933

COPPIA MACINE MAZZER TRIFASE DX
ø esterno 83 mm - ø interno 49 mm
spessore 9,6 mm - 3 fori di fissaggio

MAHLSCHEIBENPAAR MAZZER 3-PH. R
Aussen-ø 83 mm - Innen-ø 49 mm
Dicke 9,6 mm - 3 Befestigungslöcher

GRINDING BURRS PAIR MAZZER 3-PH. RH
external ø 83 mm - internal ø 49 mm
thickness 9.6 mm - 3 fixing holes

PAREJA FRESAS MAZZER TRIF. DCHA
ø exterior 83 mm - ø interior 49 mm
espesor 9,6 mm - 3 agujeros de anclaje

ASTORIA CMA 28215001

1251707

COPPIA MACINE ROSSI SX
MACINE "HEAVY DUTY" - durata maggiore del 70%
rispetto a una macina standard
non subiscono deformazioni
minor contaminazione del caffè macinato
ø esterno 63,5 mm - ø interno 38 mm
spessore 9 mm - 3 fori fissaggio

GRINDING BURRS PAIR ROSSI LH
BURRS "HEAVY DUTY" - duration increased by 70%
compared to a standard grinding burr
they do not deform
lower contamination of ground coffee
external ø 63.5 mm - internal ø 38 mm
thickness 9 mm - 3 fixing holes

MAHLSCHEIBENPAAR ROSSI L
MAHLSCHEIBE "HEAVY DUTY" - Dauer 70% länger
als eine Standardmahlscheibe
sie deformieren nicht
niedrigere Kontamination des gemahlenen Kaffees
Aussen-ø 63,5 mm - Innen-ø 38 mm
Stärke 9 mm - 3 Befestigungslöcher

PAREJA FRESAS ROSSI IZQ
FRESAS "HEAVY DUTY" - duración superior al 70%
en comparación con una fresa estándar
no padecen deformaciones
menor contaminación del café molido
ø exterior 63,5 mm - ø interior 38 mm
espesor 9 mm - 3 agujeros anclaje

ASTORIA CMA

1251011

COPPIA MACINE ROSSI-ASTRAL SX
ø esterno 64 mm - ø interno 38 mm
spessore 9 mm - 3 fori di fissaggio

GRINDING BURRS PAIR ROSSI-ASTRAL LH
external ø 64 mm - internal ø 38 mm
thickness 9 mm - 3 fixing holes

MAHLSCHEIBENPAAR ROSSI-ASTRAL L
Aussen-ø 64 mm - Innen-ø 38 mm
Dicke 9 mm - 3 Befestigungslöcher

PAREJA FRESAS ROSSI-ASTRAL IZQ
ø exterior 64 mm - ø interior 38 mm
espesor 9 mm - 3 agujeros de anclaje

ASTORIA CMA 28216

BEZZERA

1251032

COPPIA MACINE CIMBALI DX
ø esterno 64 mm - ø interno 37 mm
spessore 9 mm - 3 fori di fissaggio

GRINDING BURRS PAIR CIMBALI RH
external ø 64 mm - internal ø 37 mm
thickness 9 mm - 3 fixing holes

MAHLSCHEIBENPAAR CIMBALI R
Aussen-ø 64 mm - Innen-ø 37 mm
Dicke 9 mm - 3 Befestigungslöcher

PAREJA FRESAS CIMBALI DCHA
ø exterior 64 mm - ø interior 37 mm
espesor 9 mm - 3 agujeros de anclaje

BEZZERA 0M1501001

1251047

COPPIA MACINE CIMBALI DX
ø esterno 64 mm - ø interno 38 mm
spessore 9 mm - 3 fori di fissaggio

GRINDING BURRS PAIR CIMBALI RH
external ø 64 mm - internal ø 38 mm
thickness 9 mm - 3 fixing holes

MAHLSCHEIBENPAAR CIMBALI R
Aussen-ø 64 mm - Innen-ø 38 mm
Dicke 9 mm - 3 Befestigungslöcher

PAREJA FRESAS CIMBALI DCHA
ø exterior 64 mm - ø interior 38 mm
espesor 9 mm - 3 agujeros de anclaje

BEZZERA 0M1501002

1251062

COPPIA MACINE OBEL SX
ø esterno 50 mm - ø interno 30 mm
spessore 8 mm - 3 fori di fissaggio

GRINDING BURRS PAIR OBEL LH
external ø 50 mm - internal ø 30 mm
thickness 8 mm - 3 fixing holes

MAHLSCHEIBENPAAR OBEL L
Aussen-ø 50 mm - Innen-ø 30 mm
Dicke 8 mm - 3 Befestigungslöcher

PAREJA FRESAS OBEL IZQ
ø exterior 50 mm - ø interior 30 mm
espesor 8 mm - 3 agujeros de anclaje

BEZZERA 0BDF8

1251702

COPPIA MACINE OBEL SX
MACINE "HEAVY DUTY" - durata maggiore del 70%
rispetto a una macina standard
non subiscono deformazioni
minor contaminazione del caffè macinato
ø esterno 63,5 mm - ø interno 37,5 mm
spessore 9 mm - 3 fori fissaggio

GRINDING BURRS PAIR OBEL LH
GRIND BURRS "HEAVY DUTY" +70% longer life cycle
compared to a standard grinding burr
they do not deform
less contamination of milled coffee
ø external 63.5 mm - ø internal 37.5 mm
thickness 9 mm - 3 fixing holes

MAHLSCHEIBENPAAR OBEL L
MAHLSCHEIBE "HEAVY DUTY" - Lebensdauer +70%
als Standard-Mahlscheibe
die deformieren nicht
weniger Kontamination des gemahlenen Kaffee
Aussen-ø63,5 mm - Innen-ø 37,5 mm
Stärke 9 mm - 3 Befestigungslöcher

PAREJA FRESAS OBEL IZQ
FRESAS "HEAVY DUTY" - mayor duración (+70%)
respecto a una fresa estandar
no se deforman
menos contaminación del café molido
ø ext. 63,5 mm - ø int. 37,5 mm
espesor 9 mm - 3 agujeros de anclaje

BEZZERA

1251061

COPPIA MACINE OBEL-CARIMALI SX
ø esterno 64 mm - ø interno 38 mm
spessore 9 mm - 3 fori di fissaggio

GRINDING BURRS PAIR OBEL-CARIMALI LH
external ø 64 mm - internal ø 38 mm
thickness 9 mm - 3 fixing holes

MAHLSCHEIBENPAAR OBEL-CARIMALI L
Aussen-ø 64 mm - Innen-ø 38 mm
Dicke 9 mm - 3 Befestigungslöcher

PAREJA FRESAS OBEL-CARIMALI IZQ
ø exterior 64 mm - ø interior 38 mm
espesor 9 mm - 3 agujeros de anclaje

BEZZERA 0BEB08

BRASILIA

1251076

COPPIA MACINE ROSSI CONICA DX
ø esterno 68/49 mm - ø interno 41/13 mm
spessore 25 mm - 4 fori di fissaggio
scanalatura interna per chiavetta

GRINDING BURRS PAIR ROSSI CONIC RH
external ø 68/49 mm - internal ø 41/13 mm
thickness 25 mm - 4 fixing holes
inner groove for feather key

MAHLSCHEIBENPAAR ROSSI KEGELF. R
Aussen-ø 68/49 mm - Innen-ø 41/13 mm
Dicke 25 mm - 4 Befestigungslöcher
innere Rille für Keil

PAREJA FRESAS ROSSI CÓNICA DCHA
ø exterior 68/49 mm - ø interior 41/13 mm
espesor 25 mm - 4 agujeros de anclaje
acanaladura interior p. llave

BRASILIA 03603.3.00.04

1251016

COPPIA MACINE ROSSI SX
ø esterno 50 mm - ø interno 31 mm
spessore 8,5 mm - 3 fori di fissaggio

MAHLSCHEIBENPAAR ROSSI L
Aussen-ø 50 mm - Innen-ø 31 mm
Dicke 8,5 mm - 3 Befestigungslöcher

GRINDING BURRS PAIR ROSSI LH
external ø 50 mm - internal ø 31 mm
thickness 8.5 mm - 3 fixing holes

PAREJA FRESAS ROSSI IZQ
ø exterior 50 mm - ø interior 31 mm
espesor 8,5 mm - 3 agujeros de anclaje

BRASILIA 00059.3.00.04

1251094

COPPIA MACINE ROSSI SX
ø esterno 63,5 mm - ø interno 38 mm
spessore 9 mm - 3 fori di fissaggio

MAHLSCHEIBENPAAR ROSSI L
Aussen-ø 63,5 mm - Innen-ø 38 mm
Dicke 9 mm - 3 Befestigungslöcher

GRINDING BURRS PAIR ROSSI LH
external ø 63.5 mm - internal ø 38 mm
thickness 9 mm - 3 fixing holes

PAREJA FRESAS ROSSI IZQ
ø exterior 63,5 mm - ø interior 38 mm
espesor 9 mm - 3 agujeros de anclaje

BRASILIA 19164.3.00.04

1251707

COPPIA MACINE ROSSI SX
MACINE "HEAVY DUTY" - durata maggiore del 70%
rispetto a una macina standard
non subiscono deformazioni
minor contaminazione del caffè macinato
ø esterno 63,5 mm - ø interno 38 mm
spessore 9 mm - 3 fori fissaggio

MAHLSCHEIBENPAAR ROSSI L
MAHLSCHEIBE "HEAVY DUTY" - Dauer 70% länger
als eine Standardmahlscheibe
sie deformieren nicht
niedrigere Kontamination des gemahlenen Kaffees
Aussen-ø 63,5 mm - Innen-ø 38 mm
Stärke 9 mm - 3 Befestigungslöcher

GRINDING BURRS PAIR ROSSI LH
BURRS "HEAVY DUTY" - duration increased by 70%
compared to a standard grinding burr
they do not deform
lower contamination of ground coffee
external ø 63.5 mm - internal ø 38 mm
thickness 9 mm - 3 fixing holes

PAREJA FRESAS ROSSI IZQ
FRESAS "HEAVY DUTY" - duración superior al 70%
en comparación con una fresa estándar
no padecen deformaciones
menor contaminación del café molido
ø exterior 63,5 mm - ø interior 38 mm
espesor 9 mm - 3 agujeros anclaje

BRASILIA

1251011

COPPIA MACINE ROSSI-ASTRAL SX
ø esterno 64 mm - ø interno 38 mm
spessore 9 mm - 3 fori di fissaggio

MAHLSCHEIBENPAAR ROSSI-ASTRAL L
Aussen-ø 64 mm - Innen-ø 38 mm
Dicke 9 mm - 3 Befestigungslöcher

GRINDING BURRS PAIR ROSSI-ASTRAL LH
external ø 64 mm - internal ø 38 mm
thickness 9 mm - 3 fixing holes

PAREJA FRESAS ROSSI-ASTRAL IZQ
ø exterior 64 mm - ø interior 38 mm
espesor 9 mm - 3 agujeros de anclaje

BRASILIA 00058.2.00.04 BRASILIA 00058.3.00.04

CARIMALI

1251062

COPPIA MACINE OBEL SX
ø esterno 50 mm - ø interno 30 mm
spessore 8 mm - 3 fori di fissaggio

GRINDING BURRS PAIR OBEL LH
external ø 50 mm - internal ø 30 mm
thickness 8 mm - 3 fixing holes

MAHLSCHEIBENPAAR OBEL L
Aussen-ø 50 mm - Innen-ø 30 mm
Dicke 8 mm - 3 Befestigungslöcher

PAREJA FRESAS OBEL IZQ
ø exterior 50 mm - ø interior 30 mm
espesor 8 mm - 3 agujeros de anclaje

CARIMALI 95.01485

1251114

COPPIA MACINE OBEL SX
ø esterno 75 mm - ø interno 43,6 mm
spessore 9 mm - 3 fori di fissaggio

GRINDING BURRS PAIR OBEL LH
external ø 75 mm - internal ø 43.6 mm
thickness 9 mm - 3 mounting holes

MAHLSCHEIBENPAAR OBEL L
Aussen-ø 75 mm - Innen-ø 43,6 mm
Dicke 9 mm - 3 Befestigungslöcher

PAREJA FRESAS OBEL IZQ
ø exterior 75 mm - ø interior 43,6 mm
espesor 9 mm - 3 agujeros de anclaje

CARIMALI 95.01324

1251702

COPPIA MACINE OBEL SX
MACINE "HEAVY DUTY" - durata maggiore del 70%
rispetto a una macina standard
non subiscono deformazioni
minor contaminazione del caffè macinato
ø esterno 63,5 mm - ø interno 37,5 mm
spessore 9 mm - 3 fori fissaggio

GRINDING BURRS PAIR OBEL LH
GRIND BURRS "HEAVY DUTY" +70% longer life cycle
compared to a standard grinding burr
they do not deform
less contamination of milled coffee
ø external 63.5 mm - ø internal 37.5 mm
thickness 9 mm - 3 fixing holes

MAHLSCHEIBENPAAR OBEL L
MAHLSCHEIBE "HEAVY DUTY" - Lebensdauer +70%
als Standard-Mahlscheibe
die deformieren nicht
weniger Kontamination des gemahlenen Kaffee
Aussen-ø63,5 mm - Innen-ø 37,5 mm
Stärke 9 mm - 3 Befestigungslöcher

PAREJA FRESAS OBEL IZQ
FRESAS "HEAVY DUTY" - mayor duración (+70%)
respecto a una fresa estandar
no se deforman
menos contaminación del café molido
ø ext. 63,5 mm - ø int. 37,5 mm
espesor 9 mm - 3 agujeros de anclaje

CARIMALI

1251061

COPPIA MACINE OBEL-CARIMALI SX
ø esterno 64 mm - ø interno 38 mm
spessore 9 mm - 3 fori di fissaggio

GRINDING BURRS PAIR OBEL-CARIMALI LH
external ø 64 mm - internal ø 38 mm
thickness 9 mm - 3 fixing holes

MAHLSCHEIBENPAAR OBEL-CARIMALI L
Aussen-ø 64 mm - Innen-ø 38 mm
Dicke 9 mm - 3 Befestigungslöcher

PAREJA FRESAS OBEL-CARIMALI IZQ
ø exterior 64 mm - ø interior 38 mm
espesor 9 mm - 3 agujeros de anclaje

CARIMALI 95.00404

CASADIO

1251189

COPPIA MACINE CASADIO CONICA DX
ø esterno 68/49 mm - ø interno 42/11 mm
spessore 25 mm - 4 fori di fissaggio
scanalatura interna per chiavetta

GRINDING BURRS PAIR CASADIO CONIC RH
external ø 68/49 mm - internal ø 42/11 mm
thickness 25 mm - 4 fixing holes
inner groove for feather

MAHLSCHEIBENPAAR CASADIO KEGELF. R
Aussen-ø 68/49 mm - Innen-ø 42/11 mm
Dicke 25 mm - 4 Befestigungslöcher
innere Rille für Keil

PAREJA FRESAS CASADIO CÓNICA DCHA
ø exterior 68/49 mm - ø interior 42/11 mm
espesor 25 mm - 4 agujeros de anclaje
acanaladura interior p. llave

CASADIO 965157000

1251187

COPPIA MACINE CASADIO/CIMBALI/FAEMA DX
ø esterno 63,5 mm - ø interno 38 mm
spessore 9 mm - 3 fori fissaggio

GRIND. BURRS P. CASADIO/CIMBALI/FAEMA RH
external ø 63.5 mm - internal ø 38 mm
thickness 9 mm - 3 fixing holes

MAHLSCHEIBENPAAR CASADIO/CIMBALI/FAEMA R
Aussen-ø 63,5 mm - Innen-ø 38 mm
Dicke 9 mm - 3 Befestigungslöcher

PAREJA FRESAS CASADIO/CIMBALI/FAEMA DCHA
ø exterior 63,5 mm - ø interior 38 mm
espesor 9 mm - 3 agujeros de anclaje

CASADIO 537048800

1251076

COPPIA MACINE ROSSI CONICA DX
ø esterno 68/49 mm - ø interno 41/13 mm
spessore 25 mm - 4 fori di fissaggio
scanalatura interna per chiavetta

GRINDING BURRS PAIR ROSSI CONIC RH
external ø 68/49 mm - internal ø 41/13 mm
thickness 25 mm - 4 fixing holes
inner groove for feather key

MAHLSCHEIBENPAAR ROSSI KEGELF. R
Aussen-ø 68/49 mm - Innen-ø 41/13 mm
Dicke 25 mm - 4 Befestigungslöcher
innere Rille für Keil

PAREJA FRESAS ROSSI CÓNICA DCHA
ø exterior 68/49 mm - ø interior 41/13 mm
espesor 25 mm - 4 agujeros de anclaje
acanaladura interior p. llave

CASADIO 41008320002

CIMBALI

1251187

COPPIA MACINE CASADIO/CIMBALI/FAEMA DX
ø esterno 63,5 mm - ø interno 38 mm
spessore 9 mm - 3 fori fissaggio

GRIND. BURRS P. CASADIO/CIMBALI/FAEMA RH
external ø 63.5 mm - internal ø 38 mm
thickness 9 mm - 3 fixing holes

MAHLSCHEIBENPAAR CASADIO/CIMBALI/FAEMA R
Aussen-ø 63,5 mm - Innen-ø 38 mm
Dicke 9 mm - 3 Befestigungslöcher

PAREJA FRESAS CASADIO/CIMBALI/FAEMA DCHA
ø exterior 63,5 mm - ø interior 38 mm
espesor 9 mm - 3 agujeros de anclaje

CIMBALI 537-048-800

1251031

COPPIA MACINE CIMBALI DX
ø esterno 54 mm - ø interno 32 mm
spessore 9 mm - 3 fori di fissaggio

GRINDING BURRS PAIR CIMBALI RH
external ø 54 mm - internal ø 32 mm
thickness 9 mm - 3 fixing holes

MAHLSCHEIBENPAAR CIMBALI R
Aussen-ø 54 mm - Innen-ø 32 mm
Dicke 9 mm - 3 Befestigungslöcher

PAREJA FRESAS CIMBALI DCHA
ø exterior 54 mm - ø interior 32 mm
espesor 9 mm - 3 agujeros de anclaje

CIMBALI

1251032

COPPIA MACINE CIMBALI DX
ø esterno 64 mm - ø interno 37 mm
spessore 9 mm - 3 fori di fissaggio

GRINDING BURRS PAIR CIMBALI RH
external ø 64 mm - internal ø 37 mm
thickness 9 mm - 3 fixing holes

MAHLSCHEIBENPAAR CIMBALI R
Aussen-ø 64 mm - Innen-ø 37 mm
Dicke 9 mm - 3 Befestigungslöcher

PAREJA FRESAS CIMBALI DCHA
ø exterior 64 mm - ø interior 37 mm
espesor 9 mm - 3 agujeros de anclaje

CIMBALI 535-100-200

1251047

COPPIA MACINE CIMBALI DX
ø esterno 64 mm - ø interno 38 mm
spessore 9 mm - 3 fori di fissaggio

GRINDING BURRS PAIR CIMBALI RH
external ø 64 mm - internal ø 38 mm
thickness 9 mm - 3 fixing holes

MAHLSCHEIBENPAAR CIMBALI R
Aussen-ø 64 mm - Innen-ø 38 mm
Dicke 9 mm - 3 Befestigungslöcher

PAREJA FRESAS CIMBALI DCHA
ø exterior 64 mm - ø interior 38 mm
espesor 9 mm - 3 agujeros de anclaje

CIMBALI 803-130-055

1251045

COPPIA MACINE CIMBALI-FAEMA CONICA DX
ø esterno 68/49 mm - ø interno 41/11 mm
spessore 25 mm - 4 fori di fissaggio

GRINDING BURRS P. CIMBALI-FAEMA CONIC RH
external ø 68/49 mm - internal ø 41/11 mm
thickness 25 mm - 4 fixing holes

MAHLSCHEIBENPAAR CIMBALI-FAEMA KEGELF. R
Aussen-ø 68/49 mm - Innen-ø 41/11 mm
Dicke 25 mm - 4 Befestigungslöcher

PAREJA FRESAS CIMBALI-FAEMA CÓNICA DCHA
ø exterior 68/49 mm - ø interior 41/11 mm
espesor 25 mm - 4 agujeros de anclaje

CIMBALI 2801-131-470

1251706

COPPIA MACINE CIMBALI-FAEMA CONICA DX
MACINE "HEAVY DUTY" - durata maggiore del 70%
rispetto a una macina standard
non subiscono deformazioni
minor contaminazione del caffè macinato
ø esterno 68/49 mm - ø interno 40/11 mm
spessore 25 mm - 4 fori di fissaggio

GRINDING BURRS P. CIMBALI-FAEMA CONIC RH
GRIND BURRS "HEAVY DUTY" +70% longer life cycle
compared to a standard grinding burr
they do not deform
less contamination of ground coffee
external ø 68/49 mm - internal ø 40/11 mm
thickness 25 mm - 4 fixing holes

MAHLSCHEIBENPAAR CIMBALI-FAEMA KEGELF. R
MAHLSCHEIBE "HEAVY DUTY" - Lebensdauer +70%
als Standard-Mahlscheibe
sie deformieren nicht
weniger Kontamination des gemahlenen Kaffees
Aussen-ø 68/49 mm - Innen-ø 40/11 mm
Stärke 25 mm - 4 Befestigungslöcher

PAREJA FRESAS CIMBALI-FAEMA CÓNICA DCHA
FRESAS "HEAVY DUTY" - duración superior al 70%
respecto de una fresa estándar
no se deforman
menor contaminación del café molido
ø exterior 68/49 mm - ø interior 40/11 mm
espesor 25 mm - 4 agujeros de anclaje

CIMBALI

1251041

COPPIA MACINE CIMBALI-FAEMA DX
ø esterno 54 mm - ø interno 31 mm
spessore 8 mm - 3 fori di fissaggio

MAHLSCHEIBENPAAR CIMBALI-FAEMA R
Aussen-ø 54 mm - Innen-ø 31 mm
Dicke 8 mm - 3 Befestigungslöcher

CIMBALI 4801-116-730

GRINDING BURRS PAIR CIMBALI-FAEMA RH
external ø 54 mm - internal ø 31 mm
thickness 8 mm - 3 fixing holes

PAREJA FRESAS CIMBALI-FAEMA DCHA
ø exterior 54 mm - ø interior 31 mm
espesor 8 mm - 3 agujeros de anclaje

1251044

COPPIA MACINE CIMBALI-FAEMA DX
ø esterno 64 mm - ø interno 38 mm
spessore 9 mm - 3 fori di fissaggio

MAHLSCHEIBENPAAR CIMBALI-FAEMA R
Aussen-ø 64 mm - Innen-ø 38 mm
Dicke 9 mm - 3 Befestigungslöcher

CIMBALI 4801-119-956

GRINDING BURRS PAIR CIMBALI-FAEMA RH
external ø 64 mm - internal ø 38 mm
thickness 9 mm - 3 fixing holes

PAREJA FRESAS CIMBALI-FAEMA DCHA
ø exterior 64 mm - ø interior 38 mm
espesor 9 mm - 3 agujeros de anclaje

1251046

COPPIA MACINE CIMBALI-FAEMA DX
ø esterno 75 mm - ø interno 43,5 mm
spessore 9 mm - 3 fori di fissaggio

MAHLSCHEIBENPAAR CIMBALI-FAEMA R
Aussen-ø 75 mm - Innen-ø 43,5 mm
Dicke 9 mm - 3 Befestigungslöcher

CIMBALI 4801-133-539

GRINDING BURRS PAIR CIMBALI-FAEMA RH
external ø 75 mm - internal ø 43.5 mm
thickness 9 mm - 3 fixing holes

PAREJA FRESAS CIMBALI-FAEMA DCHA
ø exterior 75 mm - ø interior 43,5 mm
espesor 9 mm - 3 agujeros de anclaje

1251042

COPPIA MACINE CIMBALI-FAEMA SX
ø esterno 54 mm - ø interno 31 mm
spessore 8 mm - 3 fori di fissaggio

MAHLSCHEIBENPAAR CIMBALI-FAEMA L
Aussen-ø 54 mm - Innen-ø 31 mm
Dicke 8 mm - 3 Befestigungslöcher

CIMBALI

GRINDING BURRS PAIR CIMBALI-FAEMA LH
external ø 54 mm - internal ø 31 mm
thickness 8 mm - 3 fixing holes

PAREJA FRESAS CIMBALI-FAEMA IZQ
ø exterior 54 mm - ø interior 31 mm
espesor 8 mm - 3 agujeros de anclaje

1251043

COPPIA MACINE CIMBALI-FAEMA SX
ø esterno 62 mm - ø interno 38 mm
spessore 9 mm - 3 fori di fissaggio

MAHLSCHEIBENPAAR CIMBALI-FAEMA L
Aussen-ø 62 mm - Innen-ø 38 mm
Dicke 9 mm - 3 Befestigungslöcher

CIMBALI

GRINDING BURRS PAIR CIMBALI-FAEMA LH
external ø 62 mm - internal ø 38 mm
thickness 9 mm - 3 fixing holes

PAREJA FRESAS CIMBALI-FAEMA IZQ
ø exterior 62 mm - ø interior 38 mm
espesor 9 mm - 3 agujeros de anclaje

1251170

COPPIA MACINE CIMBALI/FAEMA DX
ø esterno 63,5 mm - ø interno 38 mm
spessore 9 mm - 3 fori di fissaggio

GRINDING BURRS PAIR CIMBALI/FAEMA RH
external ø 63.5 mm - internal ø 38 mm
thickness 9 mm - 3 fixing holes

MAHLSCHEIBENPAAR CIMBALI/FAEMA R
Aussen-ø 63,5 mm - Innen-ø 38 mm
Dicke 9 mm - 3 Befestigungslöcher

PAREJA FRESAS CIMBALI/FAEMA DCHA
ø exterior 63,5 mm - ø interior 38 mm
espesor 9 mm - 3 agujeros de anclaje

CIMBALI 537-041-300 CIMBALI 916-116-000

1251703

COPPIA MACINE CIMBALI/FAEMA DX
MACINE "HEAVY DUTY" - durata maggiore del 70%
rispetto a una macina standard
non subiscono deformazioni
minor contaminazione del caffè macinato
ø esterno 75 mm - ø interno 43,5 mm
spessore 9 mm - 3 fori fissaggio

GRINDING BURRS PAIR CIMBALI/FAEMA RH
GRIND BURRS "HEAVY DUTY" +70% longer life cycle
compared to a standard grinding burr
they do not deform
less contamination of milled coffee
ø external 75 mm - ø internal 43.5 mm
thickness 9 mm - 3 fixing holes

MAHLSCHEIBENPAAR CIMBALI/FAEMA R
MAHLSCHEIBE "HEAVY DUTY" - Lebensdauer +70%
als Standard-Mahlscheibe
die deformieren nicht
weniger Kontamination des gemahlenen Kaffee
Aussen-ø 75 mm - Innen-ø 43,5 mm
Stärke 9 mm - 3 Befestigungslöcher

PAREJA FRESAS CIMBALI/FAEMA DCHA
FRESAS "HEAVY DUTY" - mayor duración (+70%)
respecto a una fresa estandar
no se deforman
menos contaminación del café molido
ø ext. 75 mm - ø int. 43,5 mm
espesor 9 mm - 3 agujeros de anclaje

CIMBALI

1251036

COPPIA MACINE DRM-ALINOX-CIMBALI DX
ø esterno 68 mm - ø interno 43 mm
spessore 8 mm - 3 fori di fissaggio

GRINDING BURRS P. DRM-ALINOX-CIMBALI RH
external ø 68 mm - internal ø 43 mm
thickness 8 mm - 3 fixing holes

MAHLSCHEIBENPAAR DRM-ALINOX-CIMBALI R
Aussen-ø 68 mm - Innen-ø 43 mm
Dicke 8 mm - 3 Befestigungslöcher

PAREJA FRESAS DRM-ALINOX-CIMBALI DCHA
ø exterior 68 mm - ø interior 43 mm
espesor 8 mm - 3 agujeros de anclaje

CIMBALI 803-130-050

COMPAK

1251142

COPPIA MACINE COMPAK CONICA DX
ø esterno 68/49 mm - ø interno 41/13 mm
spessore 25 mm - 4 fori di fissaggio

GRINDING BURRS PAIR COMPAK CONIC RH
external ø 68/49 mm - internal ø 41/13 mm
thickness 25 mm - 4 fixing holes

MAHLSCHEIBENPAAR COMPAK KEGELF. R
Aussen-ø 68/49 mm - Innen-ø 41/13 mm
Dicke 25 mm - 4 Befestigungslöcher

PAREJA FRESAS COMPAK CÓNICA DCHA
ø exterior 68/49 mm - ø interior 41/13 mm
espesor 25 mm - 4 agujeros de anclaje

COMPAK K.3068

1251137

COPPIA MACINE COMPAK DX
ø esterno 54 mm - ø interno 32 mm
spessore 8,5 mm - 3 fori fissaggio

GRINDING BURRS PAIR COMPAK RH
external ø 54 mm - internal ø 32 mm
thickness 8.5 mm - 3 fixing holes

MAHLSCHEIBENPAAR COMPAK R
Aussen-ø 54 mm - Innen-ø 32 mm
Dicke 8,5 mm - 3 Befestigungslöcher

PAREJA FRESAS COMPAK DCHA
ø exterior 54 mm - ø interior 32 mm
espesor 8,5 mm - 3 agujeros de anclaje

COMPAK K.2054

1251138

COPPIA MACINE COMPAK DX
ø esterno 58 mm - ø interno 33 mm
spessore 8,5 mm - 3 fori fissaggio

GRINDING BURRS PAIR COMPAK RH
external ø 58 mm - internal ø 33 mm
thickness 8.5 mm - 3 fixing holes

MAHLSCHEIBENPAAR COMPAK R
Aussen-ø 58 mm - Innen-ø 33 mm
Dicke 8,5 mm - 3 Befestigungslöcher

PAREJA FRESAS COMPAK DCHA
ø exterior 58 mm - ø interior 33 mm
espesor 8,5 mm - 3 agujeros de anclaje

COMPAK K.2058

1251140

COPPIA MACINE COMPAK DX
ø esterno 82,5 mm - ø interno 49 mm
spessore 9,5 mm - 3 fori fissaggio

GRINDING BURRS PAIR COMPAK RH
external ø 82.5 mm - internal ø 49 mm
thickness 9.5 mm - 3 fixing holes

MAHLSCHEIBENPAAR COMPAK R
Aussen-ø 82,5 mm - Innen-ø 49 mm
Dicke 9,5 mm - 3 Befestigungslöcher

PAREJA FRESAS COMPAK DCHA
ø exterior 82,5 mm - ø interior 49 mm
espesor 9,5 mm - 3 agujeros de anclaje

COMPAK K..812

1251501

COPPIA MACINE COMPAK DX
ø esterno 60 mm - ø interno 36 mm
spessore 8 mm - 3 fori di fissaggio

GRINDING BURRS PAIR COMPAK RH
external ø 60 mm - internal ø 36 mm
thickness 8 mm - 3 fixing holes

MAHLSCHEIBENPAAR COMPAK R
Aussen-ø 60 mm - Innen-ø 36 mm
Dicke 8 mm - 3 Befestigungslöcher

PAREJA FRESAS COMPAK DCHA
ø exterior 60 mm - ø interior 36 mm
espesor 8 mm - 3 agujeros de anclaje

COMPAK

1251503

COPPIA MACINE COMPAK DX
ø esterno 75 mm - ø interno 43 mm
spessore 10,5 mm - 3 fori di fissaggio

GRINDING BURRS PAIR COMPAK RH
external ø 75 mm - internal ø 43 mm
thickness 10.5 mm - 3 fixing holes

MAHLSCHEIBENPAAR COMPAK R
Aussen-ø 75 mm - Innen-ø 43 mm
Dicke 10,5 mm - 3 Befestigungslöcher

PAREJA FRESAS COMPAK DCHA
ø exterior 75 mm - ø interior 43 mm
espesor 10,5 mm - 3 agujeros de anclaje

COMPAK K...98

1251092

COPPIA MACINE COMPAK-WEGA DX
ø esterno 63 mm - ø interno 38 mm
spessore 9 mm - 3 fori di fissaggio

GRINDING BURRS PAIR COMPAK-WEGA RH
external ø 63 mm - internal ø 38 mm
thickness 9 mm - 3 fixing holes

MAHLSCHEIBENPAAR COMPAK-WEGA R
Aussen-ø 63 mm - Innen-ø 38 mm
Dicke 9 mm - 3 Befestigungslöcher

PAREJA FRESAS COMPAK-WEGA DCHA
ø exterior 63 mm - ø interior 38 mm
espesor 9 mm - 3 agujeros de anclaje

COMPAK

1251093

COPPIA MACINE COMPAK-WEGA DX
ø esterno 80 mm - ø interno 41 mm
spessore 10 mm - 3 fori di fissaggio

GRINDING BURRS PAIR COMPAK-WEGA RH
external ø 80 mm - internal ø 41 mm
thickness 10 mm - 3 fixing holes

MAHLSCHEIBENPAAR COMPAK-WEGA R
Aussen-ø 80 mm - Innen-ø 41 mm
Dicke 10 mm - 3 Befestigungslöcher

PAREJA FRESAS COMPAK-WEGA DCHA
ø exterior 80 mm - ø interior 41 mm
espesor 10 mm - 3 agujeros de anclaje

COMPAK K..247

1251504

COPPIA MACINE COMPAK-WEGA DX
ø esterno 63,5 mm - ø interno 38 mm
spessore 9 mm - 3 fori di fissaggio

GRINDING BURRS PAIR COMPAK-WEGA RH
external ø 63.5 mm - internal ø 38 mm
thickness 9 mm - 3 fixing holes

MAHLSCHEIBENPAAR COMPAK-WEGA R
Aussen-ø 63,5 mm - Innen-ø 38 mm
Dicke 9 mm - 3 Befestigungslöcher

PAREJA FRESAS COMPAK-WEGA DCHA
ø exterior 63,5 mm - ø interior 38 mm
espesor 9 mm - 3 agujeros de anclaje

COMPAK K...99

1251701

COPPIA MACINE COMPAK-WEGA DX
MACINE "HEAVY DUTY" - durata maggiore del 70%
rispetto a una macina standard
non subiscono deformazioni
minor contaminazione del caffè macinato
ø esterno 63 mm - ø interno 38 mm
spessore 9 mm - 3 fori fissaggio

GRINDING BURRS PAIR COMPAK-WEGA RH
GRIND BURRS "HEAVY DUTY" +70% longer life cycle
compared to a standard grinding burr
they do not deform
less contamination of ground coffee
external ø 63 mm - internal ø 38 mm
thickness 9 mm - 3 fixing holes

MAHLSCHEIBENPAAR COMPAK-WEGA R
MAHLSCHEIBE "HEAVY DUTY" - Lebensdauer +70%
als Standard-Mahlscheibe
sie deformieren nicht
weniger Kontamination des gemahlenen Kaffees
Aussen-ø 63 mm - Innen-ø 38 mm
Stärke 9 mm - 3 Befestigungslöcher

PAREJA FRESAS COMPAK-WEGA DCHA
FRESAS "HEAVY DUTY" - duración superior al 70%
respecto de una fresa estándar
no se deforman
menor contaminación del café molido
ø exterior 63 mm - ø interior 38 mm
espesor 9 mm - 3 agujeros de anclaje

COMPAK

DITTING

1251125

COPPIA MACINE ASTORIA-MAHLKONIG SX
ø esterno 65 mm - ø interno 38 mm
spessore 8,4 mm - 2 fori fissaggio
ORIGINALE

GRINDING BURRS PAIR ASTORIA-MAHLKONIG LH
external ø 65 mm - internal ø 38 mm
thickness 8.4 mm - 2 fixing holes
ORIGINAL

MAHLSCHEIBENPAAR ASTORIA-MAHLKONIG L
Aussen-ø 65 mm - Innen-ø 38 mm
Dicke 8,4 mm - 2 Befestigungslöcher
ORIGINAL

PAREJA FRESAS ASTORIA-MAHLKONIG IZQ
ø exterior 65 mm - ø interior 38 mm
espesor 8,4 mm - 2 agujeros de anclaje
ORIGINAL

DITTING

1251225

COPPIA MACINE ASTORIA-MAHLKONIG SX
ø esterno 65 mm - ø interno 38 mm
spessore 8,4 mm - 2 fori fissaggio

GRINDING BURRS PAIR ASTORIA-MAHLKONIG LH
external ø 65 mm - internal ø 38 mm
thickness 8.4 mm - 2 fixing holes

MAHLSCHEIBENPAAR ASTORIA-MAHLKONIG L
Aussen-ø 65 mm - Innen-ø 38 mm
Dicke 8,4 mm - 2 Befestigungslöcher

PAREJA FRESAS ASTORIA-MAHLKONIG IZQ
ø exterior 65 mm - ø interior 38 mm
espesor 8,4 mm - 2 agujeros de anclaje

DITTING

DRM

1251032

COPPIA MACINE CIMBALI DX
ø esterno 64 mm - ø interno 37 mm
spessore 9 mm - 3 fori di fissaggio

GRINDING BURRS PAIR CIMBALI RH
external ø 64 mm - internal ø 37 mm
thickness 9 mm - 3 fixing holes

MAHLSCHEIBENPAAR CIMBALI R
Aussen-ø 64 mm - Innen-ø 37 mm
Dicke 9 mm - 3 Befestigungslöcher

PAREJA FRESAS CIMBALI DCHA
ø exterior 64 mm - ø interior 37 mm
espesor 9 mm - 3 agujeros de anclaje

DRM MA640009/0014

1251036

COPPIA MACINE DRM-ALINOX-CIMBALI DX
ø esterno 68 mm - ø interno 43 mm
spessore 8 mm - 3 fori di fissaggio

GRINDING BURRS P. DRM-ALINOX-CIMBALI RH
external ø 68 mm - internal ø 43 mm
thickness 8 mm - 3 fixing holes

MAHLSCHEIBENPAAR DRM-ALINOX-CIMBALI R
Aussen-ø 68 mm - Innen-ø 43 mm
Dicke 8 mm - 3 Befestigungslöcher

PAREJA FRESAS DRM-ALINOX-CIMBALI DCHA
ø exterior 68 mm - ø interior 43 mm
espesor 8 mm - 3 agujeros de anclaje

DRM

ELEKTRA

1251304

COPPIA MACINE MACAP DX
ø esterno 65 mm - ø interno 38 mm
spessore 8,5 mm - 3 fori di fissaggio

GRINDING BURRS PAIR MACAP RH
external ø 65 mm - internal ø 38 mm
thickness 8.5 mm - 3 fixing holes

MAHLSCHEIBENPAAR MACAP R
Aussen-ø 65 mm - Innen-ø 38 mm
Dicke 8,5 mm - 3 Befestigungslöcher

PAREJA FRESAS MACAP DCHA
ø exterior 65 mm - ø interior 38 mm
espesor 8,5 mm - 3 agujeros de anclaje

ELEKTRA C0004M122

1251310

COPPIA MACINE MACAP DX
ø esterno 74 mm - ø interno 42 mm
spessore 9 mm - 3 fori di fissaggio

GRINDING BURRS PAIR MACAP RH
external ø 74 mm - internal ø 42 mm
thickness 9 mm - 3 fixing holes

MAHLSCHEIBENPAAR MACAP R
Aussen-ø 74 mm - Innen-ø 42 mm
Dicke 9 mm - 3 Befestigungslöcher

PAREJA FRESAS MACAP DCHA
ø exterior 74 mm - ø interior 42 mm
espesor 9 mm - 3 agujeros de anclaje

ELEKTRA C0004M121

EUREKA

1251038

COPPIA MACINE EUREKA CONICA DX
ø esterno 68/49 mm - ø interno 45/13 mm
spessore 25 mm - 4 fori di fissaggio

GRINDING BURRS PAIR EUREKA CONIC RH
external ø 68/49 mm - internal ø 45/13 mm
thickness 25 mm - 4 fixing holes

MAHLSCHEIBENPAAR EUREKA KEGELF. R
Aussen-ø 68/49 mm - Innen-ø 45/13 mm
Dicke 25 mm - 4 Befestigungslöcher

PAREJA FRESAS EUREKA CÓNICA DCHA
ø exterior 68/49 mm - ø interior 45/13 mm
espesor 25 mm - 4 agujeros de anclaje

EUREKA E-13/68 EUREKA E-13/68CP

1251060

COPPIA MACINE EUREKA DX
ø esterno 74 mm - ø interno 38 mm
spessore 9 mm - 3 fori di fissaggio

GRINDING BURRS PAIR EUREKA RH
external ø 74 mm - internal ø 38 mm
thickness 9 mm - 3 fixing holes

MAHLSCHEIBENPAAR EUREKA R
Aussen-ø 74 mm - Innen-ø 38 mm
Dicke 9 mm - 3 Befestigungslöcher

PAREJA FRESAS EUREKA DCHA
ø exterior 74 mm - ø interior 38 mm
espesor 9 mm - 3 agujeros de anclaje

EUREKA MAC74 EUREKA MAC74CP EUREKA MAC75

1251068

COPPIA MACINE EUREKA DX
ø esterno 60 mm - ø interno 38 mm
spessore 9 mm - 3 fori di fissaggio

GRINDING BURRS PAIR EUREKA RH
external ø 60 mm - internal ø 38 mm
thickness 9 mm - 3 fixing holes

MAHLSCHEIBENPAAR EUREKA R
Aussen-ø 60 mm - Innen-ø 38 mm
Dicke 9 mm - 3 Befestigungslöcher

PAREJA FRESAS EUREKA DCHA
ø exterior 60 mm - ø interior 38 mm
espesor 9 mm - 3 agujeros de anclaje

EUREKA MAC60 EUREKA MAC60CP

1251069

COPPIA MACINE EUREKA DX
ø esterno 50 mm - ø interno 30 mm
spessore 7,5 mm - 3 fori di fissaggio

GRINDING BURRS PAIR EUREKA RH
external ø 50 mm - internal ø 30 mm
thickness 7.5 mm - 3 fixing holes

MAHLSCHEIBENPAAR EUREKA R
Aussen-ø 50 mm - Innen-ø 30 mm
Dicke 7,5 mm - 3 Befestigungslöcher

PAREJA FRESAS EUREKA DCHA
ø exterior 50 mm - ø interior 30 mm
espesor 7,5 mm - 3 agujeros de anclaje

EUREKA MAC50 EUREKA MAC50CP

1251070

COPPIA MACINE EUREKA DX
ø esterno 70 mm - ø interno 38 mm
spessore 9 mm - 3 fori di fissaggio

GRINDING BURRS PAIR EUREKA RH
external ø 70 mm - internal ø 38 mm
thickness 9 mm - 3 fixing holes

MAHLSCHEIBENPAAR EUREKA R
Aussen-ø 70 mm - Innen-ø 38 mm
Dicke 9 mm - 3 Befestigungslöcher

PAREJA FRESAS EUREKA DCHA
ø exterior 70 mm - ø interior 38 mm
espesor 9 mm - 3 agujeros de anclaje

EUREKA MAC70CP

1251073

COPPIA MACINE EUREKA DX
ø esterno 85 mm - ø interno 37 mm
spessore 9 mm - 3 fori di fissaggio

GRINDING BURRS PAIR EUREKA RH
external ø 85 mm - internal ø 37 mm
thickness 9 mm - 3 fixing holes

MAHLSCHEIBENPAAR EUREKA R
Aussen-ø 85 mm - Innen-ø 37 mm
Dicke 9 mm - 3 Befestigungslöcher

PAREJA FRESAS EUREKA DCHA
ø exterior 85 mm - ø interior 37 mm
espesor 9 mm - 3 agujeros de anclaje

EUREKA MAC85 EUREKA MAC85CP

1251074

COPPIA MACINE EUREKA DX
ø esterno 64 mm - ø interno 38 mm
spessore 9 mm - 3 fori di fissaggio

GRINDING BURRS PAIR EUREKA RH
external ø 64 mm - internal ø 38 mm
thickness 9 mm - 3 fixing holes

MAHLSCHEIBENPAAR EUREKA R
Aussen-ø 64 mm - Innen-ø 38 mm
Dicke 9 mm - 3 Befestigungslöcher

PAREJA FRESAS EUREKA DCHA
ø exterior 64 mm - ø interior 38 mm
espesor 9 mm - 3 agujeros de anclaje

EUREKA MAC64 EUREKA MAC64CP EUREKA MAC64TR EUREKA MAC65

1251216

COPPIA MACINE EUREKA/SIMONELLI DX
ø esterno 74 mm - ø interno 37 mm
spessore 9 mm - 3 fori di fissaggio

GRINDING BURRS PAIR EUREKA/SIMONELLI RH
external ø 74 mm - internal ø 37 mm
thickness 9 mm - 3 fixing holes

MAHLSCHEIBENPAAR EUREKA/SIMONELLI R
Aussen-ø 74 mm - Innen-ø 37 mm
Dicke 9 mm - 3 Befestigungslöcher

PAREJA FRESAS EUREKA/SIMONELLI DCHA
ø exterior 74 mm - ø interior 37 mm
espesor 9 mm - 3 agujeros de anclaje

EUREKA MACMYTHOSLOWCP

5065680

COPPIA MACINE EUREKA/SIMONELLI DX
ø esterno 74 mm - ø interno 37 mm
spessore 9 mm - 3 fori di fissaggio

GRINDING BURRS PAIR EUREKA/SIMONELLI RH
external ø 74 mm - internal ø 37 mm
thickness 9 mm - 3 fixing holes

MAHLSCHEIBENPAAR EUREKA/SIMONELLI R
Aussen-ø 74 mm - Innen-ø 37 mm
Dicke 9 mm - 3 Befestigungslöcher

PAREJA FRESAS EUREKA/SIMONELLI DCHA
ø exterior 74 mm - ø interior 37 mm
espesor 9 mm - 3 agujeros de anclaje

EUREKA MACMYTHOSLOWCP

FAEMA

1251187

COPPIA MACINE CASADIO/CIMBALI/FAEMA DX
ø esterno 63,5 mm - ø interno 38 mm
spessore 9 mm - 3 fori fissaggio

GRIND. BURRS P. CASADIO/CIMBALI/FAEMA RH
external ø 63.5 mm - internal ø 38 mm
thickness 9 mm - 3 fixing holes

MAHLSCHEIBENPAAR CASADIO/CIMBALI/FAEMA R
Aussen-ø 63,5 mm - Innen-ø 38 mm
Dicke 9 mm - 3 Befestigungslöcher

PAREJA FRESAS CASADIO/CIMBALI/FAEMA DCHA
ø exterior 63,5 mm - ø interior 38 mm
espesor 9 mm - 3 agujeros de anclaje

FAEMA 537048800

1251045

COPPIA MACINE CIMBALI-FAEMA CONICA DX
ø esterno 68/49 mm - ø interno 41/11 mm
spessore 25 mm - 4 fori di fissaggio

GRINDING BURRS P. CIMBALI-FAEMA CONIC RH
external ø 68/49 mm - internal ø 41/11 mm
thickness 25 mm - 4 fixing holes

MAHLSCHEIBENPAAR CIMBALI-FAEMA KEGELF. R
Aussen-ø 68/49 mm - Innen-ø 41/11 mm
Dicke 25 mm - 4 Befestigungslöcher

PAREJA FRESAS CIMBALI-FAEMA CÓNICA DCHA
ø exterior 68/49 mm - ø interior 41/11 mm
espesor 25 mm - 4 agujeros de anclaje

FAEMA 2801131470

1251706

COPPIA MACINE CIMBALI-FAEMA CONICA DX
MACINE "HEAVY DUTY" - durata maggiore del 70%
rispetto a una macina standard
non subiscono deformazioni
minor contaminazione del caffè macinato
ø esterno 68/49 mm - ø interno 40/11 mm
spessore 25 mm - 4 fori di fissaggio

GRINDING BURRS P. CIMBALI-FAEMA CONIC RH
GRIND BURRS "HEAVY DUTY" +70% longer life cycle
compared to a standard grinding burr
they do not deform
less contamination of ground coffee
external ø 68/49 mm - internal ø 40/11 mm
thickness 25 mm - 4 fixing holes

MAHLSCHEIBENPAAR CIMBALI-FAEMA KEGELF. R
MAHLSCHEIBE "HEAVY DUTY" - Lebensdauer +70%
als Standard-Mahlscheibe
sie deformieren nicht
weniger Kontamination des gemahlenen Kaffees
Aussen-ø 68/49 mm - Innen-ø 40/11 mm
Stärke 25 mm - 4 Befestigungslöcher

PAREJA FRESAS CIMBALI-FAEMA CÓNICA DCHA
FRESAS "HEAVY DUTY" - duración superior al 70%
respecto de una fresa estándar
no se deforman
menor contaminación del café molido
ø exterior 68/49 mm - ø interior 40/11 mm
espesor 25 mm - 4 agujeros de anclaje

FAEMA

1251041

COPPIA MACINE CIMBALI-FAEMA DX
ø esterno 54 mm - ø interno 31 mm
spessore 8 mm - 3 fori di fissaggio

GRINDING BURRS PAIR CIMBALI-FAEMA RH
external ø 54 mm - internal ø 31 mm
thickness 8 mm - 3 fixing holes

MAHLSCHEIBENPAAR CIMBALI-FAEMA R
Aussen-ø 54 mm - Innen-ø 31 mm
Dicke 8 mm - 3 Befestigungslöcher

PAREJA FRESAS CIMBALI-FAEMA DCHA
ø exterior 54 mm - ø interior 31 mm
espesor 8 mm - 3 agujeros de anclaje

FAEMA 4801116730

1251044

COPPIA MACINE CIMBALI-FAEMA DX
ø esterno 64 mm - ø interno 38 mm
spessore 9 mm - 3 fori di fissaggio

GRINDING BURRS PAIR CIMBALI-FAEMA RH
external ø 64 mm - internal ø 38 mm
thickness 9 mm - 3 fixing holes

MAHLSCHEIBENPAAR CIMBALI-FAEMA R
Aussen-ø 64 mm - Innen-ø 38 mm
Dicke 9 mm - 3 Befestigungslöcher

PAREJA FRESAS CIMBALI-FAEMA DCHA
ø exterior 64 mm - ø interior 38 mm
espesor 9 mm - 3 agujeros de anclaje

FAEMA 4801119956

1251046

COPPIA MACINE CIMBALI-FAEMA DX
ø esterno 75 mm - ø interno 43,5 mm
spessore 9 mm - 3 fori di fissaggio

GRINDING BURRS PAIR CIMBALI-FAEMA RH
external ø 75 mm - internal ø 43.5 mm
thickness 9 mm - 3 fixing holes

MAHLSCHEIBENPAAR CIMBALI-FAEMA R
Aussen-ø 75 mm - Innen-ø 43,5 mm
Dicke 9 mm - 3 Befestigungslöcher

PAREJA FRESAS CIMBALI-FAEMA DCHA
ø exterior 75 mm - ø interior 43,5 mm
espesor 9 mm - 3 agujeros de anclaje

FAEMA 4801133539

1251042

COPPIA MACINE CIMBALI-FAEMA SX
ø esterno 54 mm - ø interno 31 mm
spessore 8 mm - 3 fori di fissaggio

GRINDING BURRS PAIR CIMBALI-FAEMA LH
external ø 54 mm - internal ø 31 mm
thickness 8 mm - 3 fixing holes

MAHLSCHEIBENPAAR CIMBALI-FAEMA L
Aussen-ø 54 mm - Innen-ø 31 mm
Dicke 8 mm - 3 Befestigungslöcher

PAREJA FRESAS CIMBALI-FAEMA IZQ
ø exterior 54 mm - ø interior 31 mm
espesor 8 mm - 3 agujeros de anclaje

FAEMA

1251043

COPPIA MACINE CIMBALI-FAEMA SX
ø esterno 62 mm - ø interno 38 mm
spessore 9 mm - 3 fori di fissaggio

GRINDING BURRS PAIR CIMBALI-FAEMA LH
external ø 62 mm - internal ø 38 mm
thickness 9 mm - 3 fixing holes

MAHLSCHEIBENPAAR CIMBALI-FAEMA L
Aussen-ø 62 mm - Innen-ø 38 mm
Dicke 9 mm - 3 Befestigungslöcher

PAREJA FRESAS CIMBALI-FAEMA IZQ
ø exterior 62 mm - ø interior 38 mm
espesor 9 mm - 3 agujeros de anclaje

FAEMA

1251170

COPPIA MACINE CIMBALI/FAEMA DX
ø esterno 63,5 mm - ø interno 38 mm
spessore 9 mm - 3 fori di fissaggio

GRINDING BURRS PAIR CIMBALI/FAEMA RH
external ø 63.5 mm - internal ø 38 mm
thickness 9 mm - 3 fixing holes

MAHLSCHEIBENPAAR CIMBALI/FAEMA R
Aussen-ø 63,5 mm - Innen-ø 38 mm
Dicke 9 mm - 3 Befestigungslöcher

PAREJA FRESAS CIMBALI/FAEMA DCHA
ø exterior 63,5 mm - ø interior 38 mm
espesor 9 mm - 3 agujeros de anclaje

FAEMA 537041300

1251703

COPPIA MACINE CIMBALI/FAEMA DX
MACINE "HEAVY DUTY" - durata maggiore del 70%
rispetto a una macina standard
non subiscono deformazioni
minor contaminazione del caffè macinato
ø esterno 75 mm - ø interno 43,5 mm
spessore 9 mm - 3 fori fissaggio

GRINDING BURRS PAIR CIMBALI/FAEMA RH
GRIND BURRS "HEAVY DUTY" +70% longer life cycle
compared to a standard grinding burr
they do not deform
less contamination of milled coffee
ø external 75 mm - ø internal 43.5 mm
thickness 9 mm - 3 fixing holes

MAHLSCHEIBENPAAR CIMBALI/FAEMA R
MAHLSCHEIBE "HEAVY DUTY" - Lebensdauer +70%
als Standard-Mahlscheibe
die deformieren nicht
weniger Kontamination des gemahlenen Kaffee
Aussen-ø 75 mm - Innen-ø 43,5 mm
Stärke 9 mm - 3 Befestigungslöcher

PAREJA FRESAS CIMBALI/FAEMA DCHA
FRESAS "HEAVY DUTY" - mayor duración (+70%)
respecto a una fresa estandar
no se deforman
menos contaminación del café molido
ø ext. 75 mm - ø int. 43,5 mm
espesor 9 mm - 3 agujeros de anclaje

FAEMA

FIAMMA RST

1251062

COPPIA MACINE OBEL SX
ø esterno 50 mm - ø interno 30 mm
spessore 8 mm - 3 fori di fissaggio

GRINDING BURRS PAIR OBEL LH
external ø 50 mm - internal ø 30 mm
thickness 8 mm - 3 fixing holes

MAHLSCHEIBENPAAR OBEL L
Aussen-ø 50 mm - Innen-ø 30 mm
Dicke 8 mm - 3 Befestigungslöcher

PAREJA FRESAS OBEL IZQ
ø exterior 50 mm - ø interior 30 mm
espesor 8 mm - 3 agujeros de anclaje

FIAMMA RST 5.0.051.008F

1251707

COPPIA MACINE ROSSI SX
MACINE "HEAVY DUTY" - durata maggiore del 70%
rispetto a una macina standard
non subiscono deformazioni
minor contaminazione del caffè macinato
ø esterno 63,5 mm - ø interno 38 mm
spessore 9 mm - 3 fori fissaggio

GRINDING BURRS PAIR ROSSI LH
BURRS "HEAVY DUTY" - duration increased by 70%
compared to a standard grinding burr
they do not deform
lower contamination of ground coffee
external ø 63.5 mm - internal ø 38 mm
thickness 9 mm - 3 fixing holes

MAHLSCHEIBENPAAR ROSSI L
MAHLSCHEIBE "HEAVY DUTY" - Dauer 70% länger
als eine Standardmahlscheibe
sie deformieren nicht
niedrigere Kontamination des gemahlenen Kaffees
Aussen-ø 63,5 mm - Innen-ø 38 mm
Stärke 9 mm - 3 Befestigungslöcher

PAREJA FRESAS ROSSI IZQ
FRESAS "HEAVY DUTY" - duración superior al 70%
en comparación con una fresa estándar
no padecen deformaciones
menor contaminación del café molido
ø exterior 63,5 mm - ø interior 38 mm
espesor 9 mm - 3 agujeros anclaje

FIAMMA RST

1251011

COPPIA MACINE ROSSI-ASTRAL SX
ø esterno 64 mm - ø interno 38 mm
spessore 9 mm - 3 fori di fissaggio

GRINDING BURRS PAIR ROSSI-ASTRAL LH
external ø 64 mm - internal ø 38 mm
thickness 9 mm - 3 fixing holes

MAHLSCHEIBENPAAR ROSSI-ASTRAL L
Aussen-ø 64 mm - Innen-ø 38 mm
Dicke 9 mm - 3 Befestigungslöcher

PAREJA FRESAS ROSSI-ASTRAL IZQ
ø exterior 64 mm - ø interior 38 mm
espesor 9 mm - 3 agujeros de anclaje

FIAMMA RST 5.0.052.4435

FIORENZATO C.S.

1251088

COPPIA MACINE FIORENZATO CS CONICA DX
ø esterno 71/49 mm - ø interno 41/13 mm
spessore 25 mm - 3 fori di fissaggio

GRINDING BURRS P. FIORENZATO CS CONIC RH
external ø 71/49 mm - internal ø 41/13 mm
thickness 25 mm - 3 fixing holes

MAHLSCHEIBENPAAR FIORENZATO CS KEGELF. R
Aussen-ø 71/49 mm - Innen-ø 41/13 mm
Dicke 25 mm - 3 Befestigungslöcher

PAREJA FRESAS FIORENZATO CS CÓNICA DCHA
ø exterior 71/49 mm - ø interior 41/13 mm
espesor 25 mm - 3 agujeros de anclaje

FIORENZATO C.S. A3200018

1251084

COPPIA MACINE FIORENZATO CS DX
ø esterno 83 mm - ø interno 45 mm
spessore 10 mm - 3 fori di fissaggio

GRINDING BURRS PAIR FIORENZATO CS RH
external ø 83 mm - internal ø 45 mm
thickness 10 mm - 3 fixing holes

MAHLSCHEIBENPAAR FIORENZATO CS R
Aussen-ø 83 mm - Innen-ø 45 mm
Dicke 10 mm - 3 Befestigungslöcher

PAREJA FRESAS FIORENZATO CS DCHA
ø exterior 83 mm - ø interior 45 mm
espesor 10 mm - 3 agujeros de anclaje

FIORENZATO C.S. A3200083

1251078

COPPIA MACINE FIORENZATO CS/QUAMAR DX
ø esterno 63 mm - ø interno 38 mm
spessore 9,5 mm - 3 fori di fissaggio

GRIND. BURRS P. FIORENZATO CS/QUAMAR RH
external ø 63 mm - internal ø 38 mm
thickness 9.5 mm - 3 fixing holes

MAHLSCHEIBENPAAR FIORENZATO CS/QUAMAR R
Aussen-ø 63 mm - Innen-ø 38 mm
Dicke 9,5 mm - 3 Befestigungslöcher

PAREJA FRESAS FIORENZATO CS/QUAMAR DCHA
ø exterior 63 mm - ø interior 38 mm
espesor 9,5 mm - 3 agujeros de anclaje

FIORENZATO C.S. A3200063

FIORENZATO M.C.

5062679

COPPIA MACINE FIORENZATO MC CONICA DX
ø esterno 63/40 mm - ø interno 34/13 mm
spessore 23 mm - 3 fori di fissaggio

GRINDING BURRS P. FIORENZATO MC CONIC RH
external ø 63/40 mm - internal ø 34/13 mm
thickness 23 mm - 3 fixing holes

MAHLSCHEIBENPAAR FIORENZATO MC KEGELF. R
Aussen-ø 63/40 mm - Innen-ø 34/13 mm
Dicke 23 mm - 3 Befestigungslöcher

PAREJA FRESAS FIORENZATO MC CÓNICA DCHA
ø exterior 63/40 mm - ø interior 34/13 mm
espesor 23 mm - 3 agujeros de anclaje

FIORENZATO M.C. 001.002.021 FIORENZATO M.C. 400000002

5064260

COPPIA MACINE FIORENZATO MC CONICA DX
ø esterno 71/49 mm - ø interno 42/13 mm
spessore 25 mm - 3 fori di fissaggio

GRINDING BURRS P. FIORENZATO MC CONIC RH
external ø 71/49 mm - internal ø 42/13 mm
thickness 25 mm - 3 fixing holes

MAHLSCHEIBENPAAR FIORENZATO MC KEGELF. R
Aussen-ø 71/49 mm - Innen-ø 42/13 mm
Dicke 25 mm - 3 Befestigungslöcher

PAREJA FRESAS FIORENZATO MC CÓNICA DCHA
ø exterior 71/49 mm - ø interior 42/13 mm
espesor 25 mm - 3 agujeros de anclaje

FIORENZATO M.C. 400000015

1251030

COPPIA MACINE FIORENZATO MC DX
ø esterno 64 mm - ø interno 37 mm
spessore 8,5 mm - 3 fori di fissaggio

GRINDING BURRS PAIR FIORENZATO MC RH
external ø 64 mm - internal ø 37 mm
thickness 8.5 mm - 3 fixing holes

MAHLSCHEIBENPAAR FIORENZATO MC R
Aussen-ø 64 mm - Innen-ø 37 mm
Dicke 8,5 mm - 3 Befestigungslöcher

PAREJA FRESAS FIORENZATO MC DCHA
ø exterior 64 mm - ø interior 37 mm
espesor 8,5 mm - 3 agujeros de anclaje

FIORENZATO M.C. 001.002.034 FIORENZATO M.C. 400000005

1251033

COPPIA MACINE FIORENZATO MC DX
ø esterno 82,5 mm - ø interno 49 mm
spessore 9,5 mm - 3 fori di fissaggio

GRINDING BURRS PAIR FIORENZATO MC RH
external ø 82.5 mm - internal ø 49 mm
thickness 9.5 mm - 3 fixing holes

MAHLSCHEIBENPAAR FIORENZATO MC R
Aussen-ø 82,5 mm - Innen-ø 49 mm
Dicke 9,5 mm - 3 Befestigungslöcher

PAREJA FRESAS FIORENZATO MC DCHA
ø exterior 82,5 mm - ø interior 49 mm
espesor 9,5 mm - 3 agujeros de anclaje

FIORENZATO M.C. 001.002.030 FIORENZATO M.C. 400000004

5064594

COPPIA MACINE FIORENZATO MC DX
ø esterno 64 mm - ø interno 37 mm
spessore 8,5 mm - 3 fori fissaggio

GRINDING BURRS PAIR FIORENZATO MC RH
external ø 64 mm - internal ø 37 mm
thickness 8.5 mm - 3 fixing holes

MAHLSCHEIBENPAAR FIORENZATO MC R
Aussen-ø 64 mm - Innen-ø 37 mm
Dicke 8,5 mm - 3 Befestigungslöcher

PAREJA FRESAS FIORENZATO MC DCHA
ø exterior 64 mm - ø interior 37 mm
espesor 8,5 mm - 3 agujeros de anclaje

FIORENZATO M.C. 400000013

FUTURMAT-ARIETE

1251042

COPPIA MACINE CIMBALI-FAEMA SX
ø esterno 54 mm - ø interno 31 mm
spessore 8 mm - 3 fori di fissaggio

GRINDING BURRS PAIR CIMBALI-FAEMA LH
external ø 54 mm - internal ø 31 mm
thickness 8 mm - 3 fixing holes

MAHLSCHEIBENPAAR CIMBALI-FAEMA L
Aussen-ø 54 mm - Innen-ø 31 mm
Dicke 8 mm - 3 Befestigungslöcher

PAREJA FRESAS CIMBALI-FAEMA IZQ
ø exterior 54 mm - ø interior 31 mm
espesor 8 mm - 3 agujeros de anclaje

FUTURMAT-ARIETE 00896209

1251043

COPPIA MACINE CIMBALI-FAEMA SX
ø esterno 62 mm - ø interno 38 mm
spessore 9 mm - 3 fori di fissaggio

GRINDING BURRS PAIR CIMBALI-FAEMA LH
external ø 62 mm - internal ø 38 mm
thickness 9 mm - 3 fixing holes

MAHLSCHEIBENPAAR CIMBALI-FAEMA L
Aussen-ø 62 mm - Innen-ø 38 mm
Dicke 9 mm - 3 Befestigungslöcher

PAREJA FRESAS CIMBALI-FAEMA IZQ
ø exterior 62 mm - ø interior 38 mm
espesor 9 mm - 3 agujeros de anclaje

FUTURMAT-ARIETE 00888008

GAGGIA

MACINE VARI MARCHI
BURRS VARIOUS BRANDS
MÜHLEN VERSCHIEDENE MARKEN
FRESAS VARIAS MARCAS

1 - Original 2 - Suitable 3 4 5

Photo	LF Code	Dimensions	LH/RH	Suitable for	For machine model
1	**1251199**	ø 47.8/31.7 mm - ø 28/10 mm H20 mm	DX-RH	GAGGIA	SYNCRONYCOMPACT - SYNCRONYLOGIC - TITANIUM
1	**1251199**	ø 47.8/31.7 mm - ø 28/10 mm H20 mm	DX-RH	SAECO	CAFENOVA - INCANTO - ROYAL - ROYALCOFFEEBAR - VIENNA
2	**1251098**	ø 47.8/31.7 mm - ø 28/10 mm H20 mm	DX-RH	GAGGIA	SYNCRONYCOMPACT - SYNCRONYLOGIC - TITANIUM
2	**1251098**	ø 47.8/31.7 mm - ø 28/10 mm H20 mm	DX-RH	SAECO	CAFENOVA - INCANTO - ROYAL - ROYALCOFFEEBAR - VIENNA
3	**1251050**	ø 38/30 mm - ø 26/7 mm H17/20.3 mm	DX-RH	ISOMAC	MAVERICK PLUS - TEA BIS - ZAFFIRO BIS
3	**1251050**	ø 38/30 mm - ø 26/7 mm H17/20.3 mm	DX-RH	ARIETE	CAFE' ROMA DELUXE - CAFFE' ROMA PLUS
4	**1251250**	ø 43x26x7 mm	DX-RH	QUICK MILL	03035 PEGASO - 0835
4	**1251099**	ø 43x25x6.5 mm	SX-LH	SAECO	RIOPROFI - VIAVENEZIA
5	**1251146**	ø 48x28x6.5 mm	SX-LH	SAECO	INCANTO - ODEA - PRIMEA - TALEA

1251173

COPPIA MACINE GAGGIA DX
ø esterno 64 mm - ø interno 37 mm
spessore 8,5 mm - 3 fori di fissaggio

MAHLSCHEIBENPAAR GAGGIA R
Aussen-ø 64 mm - Innen-ø 37 mm
Dicke 8,5 mm - 3 Befestigungslöcher

GRINDING BURRS PAIR GAGGIA RH
external ø 64 mm - internal ø 37 mm
thickness 8.5 mm - 3 fixing holes

PAREJA FRESAS GAGGIA DCHA
ø exterior 64 mm - ø interior 37 mm
espesor 8,5 mm - 3 agujeros de anclaje

GAGGIA 9141.072

1251304

COPPIA MACINE MACAP DX
ø esterno 65 mm - ø interno 38 mm
spessore 8,5 mm - 3 fori di fissaggio

MAHLSCHEIBENPAAR MACAP R
Aussen-ø 65 mm - Innen-ø 38 mm
Dicke 8,5 mm - 3 Befestigungslöcher

GRINDING BURRS PAIR MACAP RH
external ø 65 mm - internal ø 38 mm
thickness 8.5 mm - 3 fixing holes

PAREJA FRESAS MACAP DCHA
ø exterior 65 mm - ø interior 38 mm
espesor 8,5 mm - 3 agujeros de anclaje

GAGGIA 4931C0004M122

1251308

COPPIA MACINE MACAP DX
ø esterno 58 mm - ø interno 34 mm
spessore 8,5 mm - 3 fori di fissaggio

MAHLSCHEIBENPAAR MACAP R
Aussen-ø 58 mm - Innen-ø 34 mm
Dicke 8,5 mm - 3 Befestigungslöcher

GRINDING BURRS PAIR MACAP RH
external ø 58 mm - internal ø 34 mm
thickness 8.5 mm - 3 fixing holes

PAREJA FRESAS MACAP DCHA
ø exterior 58 mm - ø interior 34 mm
espesor 8,5 mm - 3 agujeros de anclaje

GAGGIA 4931C0004M135

1251310

COPPIA MACINE MACAP DX
ø esterno 74 mm - ø interno 42 mm
spessore 9 mm - 3 fori di fissaggio

MAHLSCHEIBENPAAR MACAP R
Aussen-ø 74 mm - Innen-ø 42 mm
Dicke 9 mm - 3 Befestigungslöcher

GAGGIA 4931C0004M121

GRINDING BURRS PAIR MACAP RH
external ø 74 mm - internal ø 42 mm
thickness 9 mm - 3 fixing holes

PAREJA FRESAS MACAP DCHA
ø exterior 74 mm - ø interior 42 mm
espesor 9 mm - 3 agujeros de anclaje

MACAP

1251101

COPPIA MACINE MACAP CONICHE DX
ø esterno 63/40 mm - ø interno 33/13 mm
spessore 23 mm - 3 fori di fissaggio

MAHLSCHEIBENPAAR MACAP KEGELF. R
Aussen-ø 63/40 mm - Innen-ø 33/13 mm
Dicke 23 mm - 3 Befestigungslöcher

MACAP C0004M122B

GRINDING BURRS PAIR MACAP CONIC RH
external ø 63/40 mm - internal ø 33/13 mm
thickness 23 mm - 3 fixing holes

PAREJA FRESAS MACAP CÓNICAS DCHA
ø exterior 63/40 mm - ø interior 33/13 mm
espesor 23 mm - 3 agujeros de anclaje

1251095

COPPIA MACINE MACAP DX
ø esterno 58 mm - ø interno 34 mm
altezza 8,5 mm - 3 fori di fissaggio

MAHLSCHEIBENPAAR MACAP R
Aussen-ø 58 mm - Innen-ø 34 mm
Höhe 8,5 mm - 3 Befestigungslöcher

MACAP C0004M135A

GRINDING BURRS PAIR MACAP RH
external ø 58 mm - internal ø 34 mm
height 8.5 mm - 3 fixing holes

PAREJA FRESAS MACAP DCHA
ø exterior 58 mm - ø interior 34 mm
altura 8,5 mm - 3 agujeros de anclaje

1251097

COPPIA MACINE MACAP DX
ø esterno 74 mm - ø interno 43 mm
altezza 9 mm - 3 fori di fissaggio

MAHLSCHEIBENPAAR MACAP R
Aussen-ø 74 mm - Innen-ø 43 mm
Höhe 9 mm - 3 Befestigungslöcher

MACAP C0004M121A

GRINDING BURRS PAIR MACAP RH
external ø 74 mm - internal ø 43 mm
height 9 mm - 3 fixing holes

PAREJA FRESAS MACAP DCHA
ø exterior 74 mm - ø interior 43 mm
altura 9 mm - 3 agujeros de anclaje

1251104

COPPIA MACINE MACAP DX
ø esterno 64,6 mm - ø interno 38 mm
altezza 8,6 mm - 3 fori di fissaggio

MAHLSCHEIBENPAAR MACAP R
Aussen-ø 64,6 mm - Innen-ø 38 mm
Höhe 8,6 mm - 3 Befestigungslöcher

MACAP C0004M122A

GRINDING BURRS PAIR MACAP RH
external ø 64.6 mm - internal ø 38 mm
height 8.6 mm - 3 fixing holes

PAREJA FRESAS MACAP DCHA
ø exterior 64,6 mm - ø interior 38 mm
altura 8,6 mm - 3 agujeros de anclaje

1251302

COPPIA MACINE MACAP DX
ø esterno 68 mm - ø interno 38 mm
spessore 9 mm - 3 fori di fissaggio

GRINDING BURRS PAIR MACAP RH
external ø 68 mm - internal ø 38 mm
thickness 9 mm - 3 fixing holes

MAHLSCHEIBENPAAR MACAP R
Aussen-ø 68 mm - Innen-ø 38 mm
Dicke 9 mm - 3 Befestigungslöcher

PAREJA FRESAS MACAP DCHA
ø exterior 68 mm - ø interior 38 mm
espesor 9 mm - 3 agujeros de anclaje

MACAP C0004M123

1251304

COPPIA MACINE MACAP DX
ø esterno 65 mm - ø interno 38 mm
spessore 8,5 mm - 3 fori di fissaggio

GRINDING BURRS PAIR MACAP RH
external ø 65 mm - internal ø 38 mm
thickness 8.5 mm - 3 fixing holes

MAHLSCHEIBENPAAR MACAP R
Aussen-ø 65 mm - Innen-ø 38 mm
Dicke 8,5 mm - 3 Befestigungslöcher

PAREJA FRESAS MACAP DCHA
ø exterior 65 mm - ø interior 38 mm
espesor 8,5 mm - 3 agujeros de anclaje

MACAP C0004M122

1251308

COPPIA MACINE MACAP DX
ø esterno 58 mm - ø interno 34 mm
spessore 8,5 mm - 3 fori di fissaggio

GRINDING BURRS PAIR MACAP RH
external ø 58 mm - internal ø 34 mm
thickness 8.5 mm - 3 fixing holes

MAHLSCHEIBENPAAR MACAP R
Aussen-ø 58 mm - Innen-ø 34 mm
Dicke 8,5 mm - 3 Befestigungslöcher

PAREJA FRESAS MACAP DCHA
ø exterior 58 mm - ø interior 34 mm
espesor 8,5 mm - 3 agujeros de anclaje

MACAP C0004M135

1251310

COPPIA MACINE MACAP DX
ø esterno 74 mm - ø interno 42 mm
spessore 9 mm - 3 fori di fissaggio

GRINDING BURRS PAIR MACAP RH
external ø 74 mm - internal ø 42 mm
thickness 9 mm - 3 fixing holes

MAHLSCHEIBENPAAR MACAP R
Aussen-ø 74 mm - Innen-ø 42 mm
Dicke 9 mm - 3 Befestigungslöcher

PAREJA FRESAS MACAP DCHA
ø exterior 74 mm - ø interior 42 mm
espesor 9 mm - 3 agujeros de anclaje

MACAP C0004M121

5073635

COPPIA MACINE MACAP DX
ø esterno 50 mm - ø interno 30 mm
spessore 7,5 mm - 3 fori fissaggio

GRINDING BURRS PAIR MACAP RH
external ø 50 mm - internal ø 30 mm
thickness 7.5 mm - 3 fixing holes

MAHLSCHEIBENPAAR MACAP R
Aussen-ø 50 mm - Innen-ø 30 mm
Dicke 7,5 mm - 3 Befestigungslöcher

PAREJA FRESAS MACAP DCHA
ø exterior 50 mm - ø interior 30 mm
espesor 7,5 mm - 3 agujeros de anclaje

MACAP C244006

1251076

COPPIA MACINE ROSSI CONICA DX
ø esterno 68/49 mm - ø interno 41/13 mm
spessore 25 mm - 4 fori di fissaggio
scanalatura interna per chiavetta

GRINDING BURRS PAIR ROSSI CONIC RH
external ø 68/49 mm - internal ø 41/13 mm
thickness 25 mm - 4 fixing holes
inner groove for feather key

MAHLSCHEIBENPAAR ROSSI KEGELF. R
Aussen-ø 68/49 mm - Innen-ø 41/13 mm
Dicke 25 mm - 4 Befestigungslöcher
innere Rille für Keil

PAREJA FRESAS ROSSI CÓNICA DCHA
ø exterior 68/49 mm - ø interior 41/13 mm
espesor 25 mm - 4 agujeros de anclaje
acanaladura interior p. llave

MACAP C0004M121B

MAHLKÖNIG

1251125

COPPIA MACINE ASTORIA-MAHLKONIG SX
ø esterno 65 mm - ø interno 38 mm
spessore 8,4 mm - 2 fori fissaggio
ORIGINALE

GRINDING BURRS PAIR ASTORIA-MAHLKONIG LH
external ø 65 mm - internal ø 38 mm
thickness 8.4 mm - 2 fixing holes
ORIGINAL

MAHLSCHEIBENPAAR ASTORIA-MAHLKONIG L
Aussen-ø 65 mm - Innen-ø 38 mm
Dicke 8,4 mm - 2 Befestigungslöcher
ORIGINAL

PAREJA FRESAS ASTORIA-MAHLKONIG IZQ
ø exterior 65 mm - ø interior 38 mm
espesor 8,4 mm - 2 agujeros de anclaje
ORIGINAL

MAHLKÖNIG

1251225

COPPIA MACINE ASTORIA-MAHLKONIG SX
ø esterno 65 mm - ø interno 38 mm
spessore 8,4 mm - 2 fori fissaggio

GRINDING BURRS PAIR ASTORIA-MAHLKONIG LH
external ø 65 mm - internal ø 38 mm
thickness 8.4 mm - 2 fixing holes

MAHLSCHEIBENPAAR ASTORIA-MAHLKONIG L
Aussen-ø 65 mm - Innen-ø 38 mm
Dicke 8,4 mm - 2 Befestigungslöcher

PAREJA FRESAS ASTORIA-MAHLKONIG IZQ
ø exterior 65 mm - ø interior 38 mm
espesor 8,4 mm - 2 agujeros de anclaje

MAHLKÖNIG

MARCFI-ANCAS

1251501

COPPIA MACINE COMPAK DX
ø esterno 60 mm - ø interno 36 mm
spessore 8 mm - 3 fori di fissaggio

GRINDING BURRS PAIR COMPAK RH
external ø 60 mm - internal ø 36 mm
thickness 8 mm - 3 fixing holes

MAHLSCHEIBENPAAR COMPAK R
Aussen-ø 60 mm - Innen-ø 36 mm
Dicke 8 mm - 3 Befestigungslöcher

PAREJA FRESAS COMPAK DCHA
ø exterior 60 mm - ø interior 36 mm
espesor 8 mm - 3 agujeros de anclaje

MARCFI-ANCAS K-246

1251093

COPPIA MACINE COMPAK-WEGA DX
ø esterno 80 mm - ø interno 41 mm
spessore 10 mm - 3 fori di fissaggio

MAHLSCHEIBENPAAR COMPAK-WEGA R
Aussen-ø 80 mm - Innen-ø 41 mm
Dicke 10 mm - 3 Befestigungslöcher

MARCFI-ANCAS K-247

GRINDING BURRS PAIR COMPAK-WEGA RH
external ø 80 mm - internal ø 41 mm
thickness 10 mm - 3 fixing holes

PAREJA FRESAS COMPAK-WEGA DCHA
ø exterior 80 mm - ø interior 41 mm
espesor 10 mm - 3 agujeros de anclaje

1251504

COPPIA MACINE COMPAK-WEGA DX
ø esterno 63,5 mm - ø interno 38 mm
spessore 9 mm - 3 fori di fissaggio

MAHLSCHEIBENPAAR COMPAK-WEGA R
Aussen-ø 63,5 mm - Innen-ø 38 mm
Dicke 9 mm - 3 Befestigungslöcher

MARCFI-ANCAS K-99

GRINDING BURRS PAIR COMPAK-WEGA RH
external ø 63.5 mm - internal ø 38 mm
thickness 9 mm - 3 fixing holes

PAREJA FRESAS COMPAK-WEGA DCHA
ø exterior 63,5 mm - ø interior 38 mm
espesor 9 mm - 3 agujeros de anclaje

MAZZER

1251115

COPPIA MACINE MAZZER DX
ø esterno 64 mm - ø interno 37 mm
spessore 8,4 mm - 3 fori di fissaggio

MAHLSCHEIBENPAAR MAZZER R
Aussen-ø 64 mm - Innen-ø 37 mm
Dicke 8,4 mm - 3 Befestigungslöcher

MAZZER FMA00189D MAZZER FMA00189D/AQQ

GRINDING BURRS PAIR MAZZER RH
external ø 64 mm - internal ø 37 mm
thickness 8.4 mm - 3 fixing holes

PAREJA FRESAS MAZZER DCHA
ø exterior 64 mm - ø interior 37 mm
espesor 8,4 mm - 3 agujeros de anclaje

MAZZER FMA00189D/QQQ

1251215

COPPIA MACINE MAZZER DX
ø esterno 64 mm - ø interno 37 mm
spessore 8,4 mm - 3 fori di fissaggio

MAHLSCHEIBENPAAR MAZZER R
Aussen-ø 64 mm - Innen-ø 37 mm
Dicke 8,4 mm - 3 Befestigungslöcher

MAZZER

GRINDING BURRS PAIR MAZZER RH
external ø 64 mm - internal ø 37 mm
thickness 8.4 mm - 3 fixing holes

PAREJA FRESAS MAZZER DCHA
ø exterior 64 mm - ø interior 37 mm
espesor 8,4 mm - 3 agujeros de anclaje

1251915

COPPIA MACINE MAZZER DX
ø esterno 58 mm - ø interno 33,5 mm
spessore 8,5 mm - 3 fori di fissaggio

MAHLSCHEIBENPAAR MAZZER R
Aussen-ø 58 mm - Innen-ø 33,5 mm
Dicke 8,5 mm - 3 Befestigungslöcher

MAZZER FMA00182D MAZZER FMA00182D/QQQ

GRINDING BURRS PAIR MAZZER RH
external ø 58 mm - internal ø 33.5 mm
thickness 8.5 mm - 3 fixing holes

PAREJA FRESAS MAZZER DCHA
ø exterior 58 mm - ø interior 33,5 mm
espesor 8,5 mm - 3 agujeros de anclaje

1251020

COPPIA MACINE MAZZER MONOFASE CONICA DX
ø esterno 63/40 mm - ø interno 40/12 mm
spessore 23 mm - 3 fori di fissaggio
scanalatura interna per chiavetta

GRINDING BURRS P. MAZZER 1-PH. CONIC RH
external ø 63/40 mm - internal ø 40/12 mm
thickness 23 mm - 3 fixing holes
inner grooving for feather

MAHLSCHEIBENPAAR MAZZER 1-PH. KEGELF. R
Aussen-ø 63/40 mm - Innen-ø 40/12 mm
Dicke 23 mm - 3 Befestigungslöcher
innere Rille für Keil

PAREJA FRESAS MAZZER MONOF. CÓNICA DCHA
ø exterior 63/40 mm - ø interior 40/12 mm
espesor 23 mm - 3 agujeros de anclaje
acanaladura interior p. llave

MAZZER FMA00191C-C MAZZER FMA00191C/A MAZZER FMA00191C/CQQ

1251179

COPPIA MACINE MAZZER MONOFASE CONICA DX
ø esterno 63/40 mm - ø interno 40/12 mm
spessore 23 mm - 3 fori di fissaggio
scanalatura interna per chiavetta

GRINDING BURRS P. MAZZER 1-PH. CONIC RH
external ø 63/40 mm - internal ø 40/12 mm
thickness 23 mm - 3 fixing holes
inner grooving for feather

MAHLSCHEIBENPAAR MAZZER 1-PH. KEGELF. R
Aussen-ø 63/40 mm - Innen-ø 40/12 mm
Dicke 23 mm - 3 Befestigungslöcher
innere Rille für Keil

PAREJA FRESAS MAZZER MONOF. CÓNICA DCHA
ø exterior 63/40 mm - ø interior 40/12 mm
espesor 23 mm - 3 agujeros de anclaje
acanaladura interior p. llave

MAZZER FMA00191C/C

1251116

COPPIA MACINE MAZZER MONOFASE DX
ø esterno 70 mm - ø interno 40 mm
spessore 9 mm - 3 fori di fissaggio

GRINDING BURRS PAIR MAZZER 1-PH. RH
external ø 70 mm - internal ø 40 mm
thickness 9 mm - 3 fixing holes

MAHLSCHEIBENPAAR MAZZER 1-PH. R
Aussen-ø 70 mm - Innen-ø 40 mm
Dicke 9 mm - 3 Befestigungslöcher

PAREJA FRESAS MAZZER MONOF. DCHA
ø exterior 70 mm - ø interior 40 mm
espesor 9 mm - 3 agujeros de anclaje

MAZZER FMA00175M MAZZER FMA00175M/QQQ

1251118

COPPIA MACINE MAZZER MONOFASE DX
ø esterno 83 mm - ø interno 49 mm
spessore 9,6 mm - 3 fori di fissaggio

GRINDING BURRS PAIR MAZZER 1-PH. RH
external ø 83 mm - internal ø 49 mm
thickness 9.6 mm - 3 fixing holes

MAHLSCHEIBENPAAR MAZZER 1-PH. R
Aussen-ø 83 mm - Innen-ø 49 mm
Dicke 9,6 mm - 3 Befestigungslöcher

PAREJA FRESAS MAZZER MONOF. DCHA
ø exterior 83 mm - ø interior 49 mm
espesor 9,6 mm - 3 agujeros de anclaje

MAZZER FMA00151A MAZZER FMA00151A/QQQ

1251700

COPPIA MACINE MAZZER MONOFASE DX
MACINE "HEAVY DUTY" - durata maggiore del 70% rispetto a una macina standard
non subiscono deformazioni
minor contaminazione del caffè macinato
ø esterno 64 mm - ø interno 38 mm
spessore 8,5 mm - 3 fori fissaggio

GRINDING BURRS PAIR MAZZER 1-PH. RH
GRIND BURRS "HEAVY DUTY" +70% longer life cycle compared to a standard grinding burr
they do not deform
less contamination of milled coffee
ø external 64 mm - ø internal 38 mm
thickness 8.5 mm - 3 fixing holes

MAHLSCHEIBENPAAR MAZZER 1-PH. R
MAHLSCHEIBE "HEAVY DUTY" - Lebensdauer +70% als Standard-Mahlscheibe - die deformieren nicht
weniger Kontamination des gemahlenen Kaffee
Aussen-ø 64 mm - Innen-ø 38 mm
Stärke 8,5 mm - 3 Befestigungslöcher

PAREJA FRESAS MAZZER MONOF. DCHA
FRESAS "HEAVY DUTY" - mayor duración (+70%) respecto a una fresa estandar - no se deforman
menos contaminación del café molido
ø ext. 64 mm - ø int. 38 mm
espesor 8,5 mm - 3 agujeros de anclaje

MAZZER

1251704

COPPIA MACINE MAZZER MONOFASE DX
MACINE "HEAVY DUTY" - durata maggiore del 70% rispetto a una macina standard
non subiscono deformazioni
minor contaminazione del caffè macinato
ø esterno 83 mm - ø interno 49 mm
spessore 9,5 mm - 3 fori fissaggio

GRINDING BURRS PAIR MAZZER 1-PH. RH
GRIND BURRS "HEAVY DUTY" +70% longer life cycle compared to a standard grinding burr
they do not deform
less contamination of milled coffee
ø external 83 mm - ø internal 49 mm
thickness 9.5 mm - 3 fixing holes

MAHLSCHEIBENPAAR MAZZER 1-PH. R
MAHLSCHEIBE "HEAVY DUTY" - Lebensdauer +70% als Standard-Mahlscheibe - die deformieren nicht
weniger Kontamination des gemahlenen Kaffee
Aussen-ø 83 mm - Innen-ø 49 mm
Stärke 9,5 mm - 3 Befestigungslöcher

PAREJA FRESAS MAZZER MONOF. DCHA
FRESAS "HEAVY DUTY" - mayor duración (+70%) respecto a una fresa estandar - no se deforman
menos contaminación del café molido
ø ext. 83 mm - ø int. 49 mm
espesor 9,5 mm - 3 agujeros de anclaje

MAZZER

1251927

COPPIA MACINE MAZZER MONOFASE DX
ø esterno 83 mm - ø interno 49 mm
spessore 9,6 mm - 3 fori di fissaggio

GRINDING BURRS PAIR MAZZER 1-PH. RH
external ø 83 mm - internal ø 49 mm
thickness 9.6 mm - 3 fixing holes

MAHLSCHEIBENPAAR MAZZER 1-PH. R
Aussen-ø 83 mm - Innen-ø 49 mm
Dicke 9,6 mm - 3 Befestigungslöcher

PAREJA FRESAS MAZZER MONOF. DCHA
ø exterior 83 mm - ø interior 49 mm
espesor 9,6 mm - 3 agujeros de anclaje

MAZZER FMA00151A MAZZER FMA00151D

1251929

COPPIA MACINE MAZZER MONOFASE DX
ø esterno 64 mm - ø interno 37 mm
spessore 8,4 mm - 3 fori di fissaggio

GRINDING BURRS PAIR MAZZER 1-PH. RH
external ø 64 mm - internal ø 37 mm
thickness 8.4 mm - 3 fixing holes

MAHLSCHEIBENPAAR MAZZER 1-PH. R
Aussen-ø 64 mm - Innen-ø 37 mm
Dicke 8,4 mm - 3 Befestigungslöcher

PAREJA FRESAS MAZZER MONOF. DCHA
ø exterior 64 mm - ø interior 37 mm
espesor 8,4 mm - 3 agujeros de anclaje

MAZZER FMA00033M MAZZER FMA00033M/QQQ

1251935

COPPIA MACINE MAZZER MONOFASE DX
ø esterno 64 mm - ø interno 37 mm
spessore 8,4 mm - 3 fori di fissaggio

GRINDING BURRS PAIR MAZZER 1-PH. RH
external ø 64 mm - internal ø 37 mm
thickness 8.4 mm - 3 fixing holes

MAHLSCHEIBENPAAR MAZZER 1-PH. R
Aussen-ø 64 mm - Innen-ø 37 mm
Dicke 8,4 mm - 3 Befestigungslöcher

PAREJA FRESAS MAZZER MONOF. DCHA
ø exterior 64 mm - ø interior 37 mm
espesor 8,4 mm - 3 agujeros de anclaje

MAZZER FMA00033M MAZZER FMA00033M/QQQ

5019959

COPPIA MACINE MAZZER MONOFASE DX
ø esterno 115 mm - ø interno 68 mm
spessore 12 mm - 3 fori di fissaggio

GRINDING BURRS PAIR MAZZER 1-PH. RH
external ø 115 mm - internal ø 68 mm
thickness 12 mm - 3 fixing holes

MAHLSCHEIBENPAAR MAZZER 1-PH. R
Aussen-ø 115 mm - Innen-ø 68 mm
Dicke 12 mm - 3 Befestigungslöcher

PAREJA FRESAS MAZZER MONOF. DCHA
ø exterior 115 mm - ø interior 68 mm
espesor 12 mm - 3 agujeros de anclaje

MAZZER FMA00174M

1251026

COPPIA MACINE MAZZER TRIFASE CONICA DX
ø esterno 67/44,5 mm - ø interno 44,5/14 mm
spessore 23 mm - 3 fori di fissaggio
scanalatura interna per chiavetta

GRINDING BURRS P. MAZZER 3-PH. CONIC RH
external ø 67/44.5 mm - internal ø 44.5/14 mm
thickness 23 mm - 3 fixing holes
inner grooving for feather key

MAHLSCHEIBENPAAR MAZZER 3-PH. KEGELF. R
Aussen-ø 67/44,5 mm - Innen-ø 44,5/14 mm
Dicke 23 mm - 3 Befestigungslöcher
innere Rille für Keil

PAREJA FRESAS MAZZER TRIF. CÓNICA DCHA
ø exterior 67/44,5 mm - ø interior 44,5/14 mm
espesor 23 mm - 3 agujeros de anclaje
acanaladura interior p. llave

MAZZER FMA00192C MAZZER FMA00192C-C MAZZER FMA00192C/CQQ

1251180

COPPIA MACINE MAZZER TRIFASE CONICA DX
ø esterno 67/44,5 mm - ø interno 44,5/14 mm
spessore 23 mm - 3 fori di fissaggio
scanalatura interna per chiavetta

GRINDING BURRS P. MAZZER 3-PH. CONIC RH
external ø 67/44.5 mm - internal ø 44.5/14 mm
thickness 23 mm - 3 fixing holes
inner groove for feather

MAHLSCHEIBENPAAR MAZZER 3-PH. KEGELF. R
Aussen-ø 67/44,5 mm - Innen-ø 44,5/14 mm
Dicke 23 mm - 3 Befestigungslöcher
innere Rille für Keil

PAREJA FRESAS MAZZER TRIF. CÓNICA DCHA
ø exterior 67/44,5 mm - ø interior 44,5/14 mm
espesor 23 mm - 3 agujeros de anclaje
acanaladura interior p. llave

MAZZER FMA00192C-C

1251056

COPPIA MACINE MAZZER TRIFASE DX
ø esterno 64 mm - ø interno 37 mm
spessore 9 mm - 3 fori di fissaggio

GRINDING BURRS PAIR MAZZER 3-PH. RH
external ø 64 mm - internal ø 37 mm
thickness 9 mm - 3 fixing holes

MAHLSCHEIBENPAAR MAZZER 3-PH. R
Aussen-ø 64 mm - Innen-ø 37 mm
Dicke 9 mm - 3 Befestigungslöcher

PAREJA FRESAS MAZZER TRIF. DCHA
ø exterior 64 mm - ø interior 37 mm
espesor 9 mm - 3 agujeros de anclaje

MAZZER FMA00033T

1251117

COPPIA MACINE MAZZER TRIFASE DX
ø esterno 70 mm - ø interno 40 mm
spessore 9 mm - 3 fori di fissaggio

GRINDING BURRS PAIR MAZZER 3-PH. RH
external ø 70 mm - internal ø 40 mm
thickness 9 mm - 3 fixing holes

MAHLSCHEIBENPAAR MAZZER 3-PH. R
Aussen-ø 70 mm - Innen-ø 40 mm
Dicke 9 mm - 3 Befestigungslöcher

PAREJA FRESAS MAZZER TRIF. DCHA
ø exterior 70 mm - ø interior 40 mm
espesor 9 mm - 3 agujeros de anclaje

MAZZER FMA00175T MAZZER FMA00175T/QQQ

1251178

COPPIA MACINE MAZZER TRIFASE DX
ø esterno 83 mm - ø interno 49 mm
spessore 9,6 mm - 3 fori di fissaggio

GRINDING BURRS PAIR MAZZER 3-PH. RH
external ø 83 mm - internal ø 49 mm
thickness 9.6 mm - 3 fixing holes

MAHLSCHEIBENPAAR MAZZER 3-PH. R
Aussen-ø 83 mm - Innen-ø 49 mm
Dicke 9,6 mm - 3 Befestigungslöcher

PAREJA FRESAS MAZZER TRIF. DCHA
ø exterior 83 mm - ø interior 49 mm
espesor 9,6 mm - 3 agujeros de anclaje

MAZZER FMA00151B/QQQ

1251928

COPPIA MACINE MAZZER TRIFASE DX
ø esterno 83 mm - ø interno 49 mm
spessore 9,6 mm - 3 fori di fissaggio

GRINDING BURRS PAIR MAZZER 3-PH. RH
external ø 83 mm - internal ø 49 mm
thickness 9.6 mm - 3 fixing holes

MAHLSCHEIBENPAAR MAZZER 3-PH. R
Aussen-ø 83 mm - Innen-ø 49 mm
Dicke 9,6 mm - 3 Befestigungslöcher

PAREJA FRESAS MAZZER TRIF. DCHA
ø exterior 83 mm - ø interior 49 mm
espesor 9,6 mm - 3 agujeros de anclaje

MAZZER FMA00151C MAZZER FMA00151C/QQQ

1251930

COPPIA MACINE MAZZER TRIFASE DX
ø esterno 64 mm - ø interno 37 mm
spessore 8,4 mm - 3 fori di fissaggio

GRINDING BURRS PAIR MAZZER 3-PH. RH
external ø 64 mm - internal ø 37 mm
thickness 8.4 mm - 3 fixing holes

MAHLSCHEIBENPAAR MAZZER 3-PH. R
Aussen-ø 64 mm - Innen-ø 37 mm
Dicke 8,4 mm - 3 Befestigungslöcher

PAREJA FRESAS MAZZER TRIF. DCHA
ø exterior 64 mm - ø interior 37 mm
espesor 8,4 mm - 3 agujeros de anclaje

MAZZER FMA00033T MAZZER FMA00033T/QQQ

1251933

COPPIA MACINE MAZZER TRIFASE DX
ø esterno 83 mm - ø interno 49 mm
spessore 9,6 mm - 3 fori di fissaggio

GRINDING BURRS PAIR MAZZER 3-PH. RH
external ø 83 mm - internal ø 49 mm
thickness 9.6 mm - 3 fixing holes

MAHLSCHEIBENPAAR MAZZER 3-PH. R
Aussen-ø 83 mm - Innen-ø 49 mm
Dicke 9,6 mm - 3 Befestigungslöcher

PAREJA FRESAS MAZZER TRIF. DCHA
ø exterior 83 mm - ø interior 49 mm
espesor 9,6 mm - 3 agujeros de anclaje

MAZZER FMA00151B MAZZER FMA00151B/QQQ MAZZER FMA00151M

5019960

COPPIA MACINE MAZZER TRIFASE DX
ø esterno 115 mm - ø interno 68 mm
spessore 12 mm - 3 fori di fissaggio

GRINDING BURRS PAIR MAZZER 3-PH. RH
external ø 115 mm - internal ø 68 mm
thickness 12 mm - 3 fixing holes

MAHLSCHEIBENPAAR MAZZER 3-PH. R
Aussen-ø 115 mm - Innen-ø 68 mm
Dicke 12 mm - 3 Befestigungslöcher

PAREJA FRESAS MAZZER TRIF. DCHA
ø exterior 115 mm - ø interior 68 mm
espesor 12 mm - 3 agujeros de anclaje

MAZZER FMA00174T MAZZER FMA00174T/QQQ

1251181

COPPIA MACINE MONOFASE MAZZER CONICHE DX
ø esterno 71/49 mm - ø interno 41/14 mm
spessore 25 mm - 3 fori di fissaggio

GRINDING BURRS P. 1-PH. MAZZER CONIC RH
external ø 71/49 mm - internal ø 41/14 mm
thickness 25 mm - 3 fixing holes

MAHLSCHEIBENPAAR 1-PH. MAZZER KEGELF. R
Aussen-ø 71/49 mm - Innen-ø 41/14 mm
Dicke 25 mm - 3 Befestigungslöcher

PAREJA FRESAS MONOF. MAZZER CÓNICAS DCHA
ø exterior 71/49 mm - ø interior 41/14 mm
espesor 25 mm - 3 agujeros de anclaje

MAZZER FMA00186C-C

1251201

COPPIA MACINE MONOFASE MAZZER CONICHE DX
MACINE "HEAVY DUTY" - durata maggiore del 70%
rispetto a una macina standard
non subiscono deformazioni
minor contaminazione del caffè macinato
ø esterno 71/49 mm - ø interno 41/14 mm
spessore 25 mm - 3 fori di fissaggio

GRINDING BURRS P. 1-PH. MAZZER CONIC RH
GRIND.BURRS "HEAVY DUTY"-lifespan increased by 70%
compared to a standard grinding burr
they do not deform
less contamination of ground coffee
external ø 71/49 mm - internal ø 41/14 mm
thickness 25 mm - 3 fixing holes

MAHLSCHEIBENPAAR 1-PH. MAZZER KEGELF. R
MAHLSCHEIBEN "HEAVY DUTY" - Dauer höher als 70%
als eine Standardmahlscheibe
sie deformieren nicht
niedrigere Kontamination des gemahlenen Kaffees
Aussen-ø 71/49 mm - Innen-ø 41/14 mm
Stärke 25 mm - 3 Befestigungslöcher

PAREJA FRESAS MONOF. MAZZER CÓNICAS DCHA
FRESAS "HEAVY DUTY" - duración superior al 70%
con respecto a una máquina estándar
no se deforman
menor contaminación del café molido
ø exterior 71/49 mm - ø interior 41/14 mm
espesor 25 mm - 3 agujeros de anclaje

MAZZER

1251914

COPPIA MACINE MONOFASE MAZZER CONICHE DX
ø esterno 71/49 mm - ø interno 41/14 mm
spessore 25 mm - 3 fori di fissaggio

GRINDING BURRS P. 1-PH. MAZZER CONIC RH
external ø 71/49 mm - internal ø 41/14 mm
thickness 25 mm - 3 fixing holes

MAHLSCHEIBENPAAR 1-PH. MAZZER KEGELF. R
Aussen-ø 71/49 mm - Innen-ø 41/14 mm
Dicke 25 mm - 3 Befestigungslöcher

PAREJA FRESAS MONOF. MAZZER CÓNICAS DCHA
ø exterior 71/49 mm - ø interior 41/14 mm
espesor 25 mm - 3 agujeros de anclaje

MAZZER FMA00186C MAZZER FMA00186C-C MAZZER FMA00186C/CQQ

1251705

COPPIA MACINE TRIFASE MAZZER CONICA DX
MACINE "HEAVY DUTY" - durata maggiore del 70%
rispetto a una macina standard
non subiscono deformazioni
minor contaminazione del caffè macinato
ø esterno 83/59 mm - ø interno 50/14 mm
spessore 25 mm - 3 fori di fissaggio

GRINDING BURRS P. 3-PH. MAZZER CONIC RH
GRIND.BURRS "HEAVY DUTY" +70% longer service life
compared to a standard grinding burr
they do not deform
lower contamination of ground coffee
external ø 83/59 mm - internal ø 50/14 mm
thickness 25 mm - 3 fixing holes

MAHLSCHEIBENPAAR 3-PH. MAZZER KEGELF. R
MAHLSCHEIBE "HEAVY DUTY" - Lebensdauer +70%
als Standard-Mahlscheibe
sie deformieren nicht
weniger Kontamination des gemahlenen Kaffees
Aussen-ø 83/59 mm - Innen-ø 50/14 mm
Stärke 25 mm - 3 Befestigungslöcher

PAREJA FRESAS TRIF. MAZZER CÓNICA DCHA
FRESAS "HEAVY DUTY" -duración superior al 70%
en comparación con una fresa estándar
no padecen deformaciones
menor contaminación del café molido
ø exterior 83/59 mm - ø interior 50/14 mm
espesor 25 mm - 3 agujeros de anclaje

MAZZER FMA00187C-C

1251913

COPPIA MACINE TRIFASE MAZZER CONICHE DX
ø esterno 83/59 mm - ø interno 52/14 mm
spessore 25 mm - 3 fori di fissaggio

GRINDING BURRS P. 3-PH. MAZZER CONIC RH
external ø 83/59 mm - internal ø 52/14 mm
thickness 25 mm - 3 fixing holes

MAHLSCHEIBENPAAR 3-PH. MAZZER KEGELF. R
Aussen-ø 83/59 mm - Innen-ø 52/14 mm
Dicke 25 mm - 3 Befestigungslöcher

PAREJA FRESAS TRIF. MAZZER CÓNICAS DCHA
ø exterior 83/59 mm - ø interior 52/14 mm
espesor 25 mm - 3 agujeros de anclaje

MAZZER FMA00187C MAZZER FMA00187C-C MAZZER FMA00187C/CQQ

NUOVA SIMONELLI

1251038

COPPIA MACINE EUREKA CONICA DX
ø esterno 68/49 mm - ø interno 45/13 mm
spessore 25 mm - 4 fori di fissaggio

GRINDING BURRS PAIR EUREKA CONIC RH
external ø 68/49 mm - internal ø 45/13 mm
thickness 25 mm - 4 fixing holes

MAHLSCHEIBENPAAR EUREKA KEGELF. R
Aussen-ø 68/49 mm - Innen-ø 45/13 mm
Dicke 25 mm - 4 Befestigungslöcher

PAREJA FRESAS EUREKA CÓNICA DCHA
ø exterior 68/49 mm - ø interior 45/13 mm
espesor 25 mm - 4 agujeros de anclaje

NUOVA SIMONELLI 15070001

1251060

COPPIA MACINE EUREKA DX
ø esterno 74 mm - ø interno 38 mm
spessore 9 mm - 3 fori di fissaggio

GRINDING BURRS PAIR EUREKA RH
external ø 74 mm - internal ø 38 mm
thickness 9 mm - 3 fixing holes

MAHLSCHEIBENPAAR EUREKA R
Aussen-ø 74 mm - Innen-ø 38 mm
Dicke 9 mm - 3 Befestigungslöcher

PAREJA FRESAS EUREKA DCHA
ø exterior 74 mm - ø interior 38 mm
espesor 9 mm - 3 agujeros de anclaje

NUOVA SIMONELLI 15080002

1251069

COPPIA MACINE EUREKA DX
ø esterno 50 mm - ø interno 30 mm
spessore 7,5 mm - 3 fori di fissaggio

GRINDING BURRS PAIR EUREKA RH
external ø 50 mm - internal ø 30 mm
thickness 7.5 mm - 3 fixing holes

MAHLSCHEIBENPAAR EUREKA R
Aussen-ø 50 mm - Innen-ø 30 mm
Dicke 7,5 mm - 3 Befestigungslöcher

PAREJA FRESAS EUREKA DCHA
ø exterior 50 mm - ø interior 30 mm
espesor 7,5 mm - 3 agujeros de anclaje

NUOVA SIMONELLI 15800039 NUOVA SIMONELLI 15800045

1251074

COPPIA MACINE EUREKA DX
ø esterno 64 mm - ø interno 38 mm
spessore 9 mm - 3 fori di fissaggio

GRINDING BURRS PAIR EUREKA RH
external ø 64 mm - internal ø 38 mm
thickness 9 mm - 3 fixing holes

MAHLSCHEIBENPAAR EUREKA R
Aussen-ø 64 mm - Innen-ø 38 mm
Dicke 9 mm - 3 Befestigungslöcher

PAREJA FRESAS EUREKA DCHA
ø exterior 64 mm - ø interior 38 mm
espesor 9 mm - 3 agujeros de anclaje

NUOVA SIMONELLI 15050001

1251216

COPPIA MACINE EUREKA/SIMONELLI DX
ø esterno 74 mm - ø interno 37 mm
spessore 9 mm - 3 fori di fissaggio

GRINDING BURRS PAIR EUREKA/SIMONELLI RH
external ø 74 mm - internal ø 37 mm
thickness 9 mm - 3 fixing holes

MAHLSCHEIBENPAAR EUREKA/SIMONELLI R
Aussen-ø 74 mm - Innen-ø 37 mm
Dicke 9 mm - 3 Befestigungslöcher

PAREJA FRESAS EUREKA/SIMONELLI DCHA
ø exterior 74 mm - ø interior 37 mm
espesor 9 mm - 3 agujeros de anclaje

NUOVA SIMONELLI 15030026 NUOVA SIMONELLI 15030057

5065680

COPPIA MACINE EUREKA/SIMONELLI DX
ø esterno 74 mm - ø interno 37 mm
spessore 9 mm - 3 fori di fissaggio

MAHLSCHEIBENPAAR EUREKA/SIMONELLI R
Aussen-ø 74 mm - Innen-ø 37 mm
Dicke 9 mm - 3 Befestigungslöcher

NUOVA SIMONELLI 15030026 NUOVA SIMONELLI 15030057

GRINDING BURRS PAIR EUREKA/SIMONELLI RH
external ø 74 mm - internal ø 37 mm
thickness 9 mm - 3 fixing holes

PAREJA FRESAS EUREKA/SIMONELLI DCHA
ø exterior 74 mm - ø interior 37 mm
espesor 9 mm - 3 agujeros de anclaje

1251076

COPPIA MACINE ROSSI CONICA DX
ø esterno 68/49 mm - ø interno 41/13 mm
spessore 25 mm - 4 fori di fissaggio
scanalatura interna per chiavetta

MAHLSCHEIBENPAAR ROSSI KEGELF. R
Aussen-ø 68/49 mm - Innen-ø 41/13 mm
Dicke 25 mm - 4 Befestigungslöcher
innere Rille für Keil

NUOVA SIMONELLI 15020001

GRINDING BURRS PAIR ROSSI CONIC RH
external ø 68/49 mm - internal ø 41/13 mm
thickness 25 mm - 4 fixing holes
inner groove for feather key

PAREJA FRESAS ROSSI CÓNICA DCHA
ø exterior 68/49 mm - ø interior 41/13 mm
espesor 25 mm - 4 agujeros de anclaje
acanaladura interior p. llave

1251707

COPPIA MACINE ROSSI SX
MACINE "HEAVY DUTY" - durata maggiore del 70%
rispetto a una macina standard
non subiscono deformazioni
minor contaminazione del caffè macinato
ø esterno 63,5 mm - ø interno 38 mm
spessore 9 mm - 3 fori fissaggio

MAHLSCHEIBENPAAR ROSSI L
MAHLSCHEIBE "HEAVY DUTY" - Dauer 70% länger
als eine Standardmahlscheibe
sie deformieren nicht
niedrigere Kontamination des gemahlenen Kaffees
Aussen-ø 63,5 mm - Innen-ø 38 mm
Stärke 9 mm - 3 Befestigungslöcher

NUOVA SIMONELLI

GRINDING BURRS PAIR ROSSI LH
BURRS "HEAVY DUTY" - duration increased by 70%
compared to a standard grinding burr
they do not deform
lower contamination of ground coffee
external ø 63.5 mm - internal ø 38 mm
thickness 9 mm - 3 fixing holes

PAREJA FRESAS ROSSI IZQ
FRESAS "HEAVY DUTY" - duración superior al 70%
en comparación con una fresa estándar
no padecen deformaciones
menor contaminación del café molido
ø exterior 63,5 mm - ø interior 38 mm
espesor 9 mm - 3 agujeros anclaje

1251011

COPPIA MACINE ROSSI-ASTRAL SX
ø esterno 64 mm - ø interno 38 mm
spessore 9 mm - 3 fori di fissaggio

MAHLSCHEIBENPAAR ROSSI-ASTRAL L
Aussen-ø 64 mm - Innen-ø 38 mm
Dicke 9 mm - 3 Befestigungslöcher

NUOVA SIMONELLI 15010030

GRINDING BURRS PAIR ROSSI-ASTRAL LH
external ø 64 mm - internal ø 38 mm
thickness 9 mm - 3 fixing holes

PAREJA FRESAS ROSSI-ASTRAL IZQ
ø exterior 64 mm - ø interior 38 mm
espesor 9 mm - 3 agujeros de anclaje

OBEL

1251062

COPPIA MACINE OBEL SX
ø esterno 50 mm - ø interno 30 mm
spessore 8 mm - 3 fori di fissaggio

GRINDING BURRS PAIR OBEL LH
external ø 50 mm - internal ø 30 mm
thickness 8 mm - 3 fixing holes

MAHLSCHEIBENPAAR OBEL L
Aussen-ø 50 mm - Innen-ø 30 mm
Dicke 8 mm - 3 Befestigungslöcher

PAREJA FRESAS OBEL IZQ
ø exterior 50 mm - ø interior 30 mm
espesor 8 mm - 3 agujeros de anclaje

OBEL DF8

1251114

COPPIA MACINE OBEL SX
ø esterno 75 mm - ø interno 43,6 mm
spessore 9 mm - 3 fori di fissaggio

GRINDING BURRS PAIR OBEL LH
external ø 75 mm - internal ø 43.6 mm
thickness 9 mm - 3 mounting holes

MAHLSCHEIBENPAAR OBEL L
Aussen-ø 75 mm - Innen-ø 43,6 mm
Dicke 9 mm - 3 Befestigungslöcher

PAREJA FRESAS OBEL IZQ
ø exterior 75 mm - ø interior 43,6 mm
espesor 9 mm - 3 agujeros de anclaje

OBEL EB08/75

1251702

COPPIA MACINE OBEL SX
MACINE "HEAVY DUTY" - durata maggiore del 70%
rispetto a una macina standard
non subiscono deformazioni
minor contaminazione del caffè macinato
ø esterno 63,5 mm - ø interno 37,5 mm
spessore 9 mm - 3 fori fissaggio

GRINDING BURRS PAIR OBEL LH
GRIND BURRS "HEAVY DUTY" +70% longer life cycle
compared to a standard grinding burr
they do not deform
less contamination of milled coffee
ø external 63.5 mm - ø internal 37.5 mm
thickness 9 mm - 3 fixing holes

MAHLSCHEIBENPAAR OBEL L
MAHLSCHEIBE "HEAVY DUTY" - Lebensdauer +70%
als Standard-Mahlscheibe
die deformieren nicht
weniger Kontamination des gemahlenen Kaffee
Aussen-ø63,5 mm - Innen-ø 37,5 mm
Stärke 9 mm - 3 Befestigungslöcher

PAREJA FRESAS OBEL IZQ
FRESAS "HEAVY DUTY" - mayor duración (+70%)
respecto a una fresa estandar
no se deforman
menos contaminación del café molido
ø ext. 63,5 mm - ø int. 37,5 mm
espesor 9 mm - 3 agujeros de anclaje

OBEL

1251061

COPPIA MACINE OBEL-CARIMALI SX
ø esterno 64 mm - ø interno 38 mm
spessore 9 mm - 3 fori di fissaggio

GRINDING BURRS PAIR OBEL-CARIMALI LH
external ø 64 mm - internal ø 38 mm
thickness 9 mm - 3 fixing holes

MAHLSCHEIBENPAAR OBEL-CARIMALI L
Aussen-ø 64 mm - Innen-ø 38 mm
Dicke 9 mm - 3 Befestigungslöcher

PAREJA FRESAS OBEL-CARIMALI IZQ
ø exterior 64 mm - ø interior 38 mm
espesor 9 mm - 3 agujeros de anclaje

OBEL EB08

1251076

COPPIA MACINE ROSSI CONICA DX
ø esterno 68/49 mm - ø interno 41/13 mm
spessore 25 mm - 4 fori di fissaggio
scanalatura interna per chiavetta

MAHLSCHEIBENPAAR ROSSI KEGELF. R
Aussen-ø 68/49 mm - Innen-ø 41/13 mm
Dicke 25 mm - 4 Befestigungslöcher
innere Rille für Keil

OBEL MT08K

GRINDING BURRS PAIR ROSSI CONIC RH
external ø 68/49 mm - internal ø 41/13 mm
thickness 25 mm - 4 fixing holes
inner groove for feather key

PAREJA FRESAS ROSSI CÓNICA DCHA
ø exterior 68/49 mm - ø interior 41/13 mm
espesor 25 mm - 4 agujeros de anclaje
acanaladura interior p. llave

PAVONI

1251061

COPPIA MACINE OBEL-CARIMALI SX
ø esterno 64 mm - ø interno 38 mm
spessore 9 mm - 3 fori di fissaggio

MAHLSCHEIBENPAAR OBEL-CARIMALI L
Aussen-ø 64 mm - Innen-ø 38 mm
Dicke 9 mm - 3 Befestigungslöcher

PAVONI OBEB08

GRINDING BURRS PAIR OBEL-CARIMALI LH
external ø 64 mm - internal ø 38 mm
thickness 9 mm - 3 fixing holes

PAREJA FRESAS OBEL-CARIMALI IZQ
ø exterior 64 mm - ø interior 38 mm
espesor 9 mm - 3 agujeros de anclaje

PROMAC

1251072

COPPIA MACINE RANCILIO SX
ø esterno 75 mm - ø interno 43 mm
spessore 10,5 mm - 3 fori di fissaggio

MAHLSCHEIBENPAAR RANCILIO L
Aussen-ø 75 mm - Innen-ø 43 mm
Dicke 10,5 mm - 3 Befestigungslöcher

PROMAC 69000034

GRINDING BURRS PAIR RANCILIO LH
external ø 75 mm - internal ø 43 mm
thickness 10.5 mm - 3 fixing holes

PAREJA FRESAS RANCILIO IZQ
ø exterior 75 mm - ø interior 43 mm
espesor 10,5 mm - 3 agujeros de anclaje

1251109

COPPIA MACINE RANCILIO SX
ø esterno 50 mm - ø interno 31 mm
altezza 8 mm - 3 fori di fissaggio

MAHLSCHEIBENPAAR RANCILIO L
Aussen-ø 50 mm - Innen-ø 31 mm
Höhe 8 mm - 3 Befestigungslöcher

PROMAC 69000032

GRINDING BURRS PAIR RANCILIO LH
external ø 50 mm - internal ø 31 mm
height 8 mm - 3 fixing holes

PAREJA FRESAS RANCILIO IZQ
ø exterior 50 mm - ø interior 31 mm
altura 8 mm - 3 agujeros de anclaje

1251071

COPPIA MACINE RANCILIO-VFA SX
ø esterno 64 mm - ø interno 38 mm
spessore 9 mm - 3 fori di fissaggio

GRINDING BURRS PAIR RANCILIO-VFA LH
external ø 64 mm - internal ø 38 mm
thickness 9 mm - 3 fixing holes

MAHLSCHEIBENPAAR RANCILIO-VFA L
Aussen-ø 64 mm - Innen-ø 38 mm
Dicke 9 mm - 3 Befestigungslöcher

PAREJA FRESAS RANCILIO-VFA IZQ
ø exterior 64 mm - ø interior 38 mm
espesor 9 mm - 3 agujeros de anclaje

PROMAC 69000033

QUAMAR

1251078

COPPIA MACINE FIORENZATO CS/QUAMAR DX
ø esterno 63 mm - ø interno 38 mm
spessore 9,5 mm - 3 fori di fissaggio

GRIND. BURRS P. FIORENZATO CS/QUAMAR RH
external ø 63 mm - internal ø 38 mm
thickness 9.5 mm - 3 fixing holes

MAHLSCHEIBENPAAR FIORENZATO CS/QUAMAR R
Aussen-ø 63 mm - Innen-ø 38 mm
Dicke 9,5 mm - 3 Befestigungslöcher

PAREJA FRESAS FIORENZATO CS/QUAMAR DCHA
ø exterior 63 mm - ø interior 38 mm
espesor 9,5 mm - 3 agujeros de anclaje

QUAMAR 260001

1251052

COPPIA MACINE FIORENZATO MS DX
ø esterno 83 mm - ø interno 45 mm
spessore 10 mm - 3 fori di fissaggio

GRINDING BURRS PAIR FIORENZATO MS RH
external ø 83 mm - internal ø 45 mm
thickness 10 mm - 3 fixing holes

MAHLSCHEIBENPAAR FIORENZATO MS R
Aussen-ø 83 mm - Innen-ø 45 mm
Dicke 10 mm - 3 Befestigungslöcher

PAREJA FRESAS FIORENZATO MS DCHA
ø exterior 83 mm - ø interior 45 mm
espesor 10 mm - 3 agujeros de anclaje

QUAMAR 260003

1251185

COPPIA MACINE FIORENZATO MS/QUAMAR DX
ø esterno 75 mm - ø interno 43 mm
spessore 10,5 mm - 3 fori di fissaggio

GRIND. BURRS P. FIORENZATO MS/QUAMAR RH
external ø 75 mm - internal ø 43 mm
thickness 10.5 mm - 3 fixing holes

MAHLSCHEIBENPAAR FIORENZATO MS/QUAMAR R
Aussen-ø 75 mm - Innen-ø 43 mm
Dicke 10,5 mm - 3 Befestigungslöcher

PAREJA FRESAS FIORENZATO MS/QUAMAR DCHA
ø exterior 75 mm - ø interior 43 mm
espesor 10,5 mm - 3 agujeros de anclaje

QUAMAR 260002 QUAMAR 260014

QUICK MILL

MACINE VARI MARCHI
BURRS VARIOUS BRANDS
MÜHLEN VERSCHIEDENE MARKEN
FRESAS VARIAS MARCAS

1 - Original 2 - Suitable 3 4 5

Photo	LF Code	Dimensions	LH/RH	Suitable for	For machine model
1	**1251199**	ø 47.8/31.7 mm - ø 28/10 mm H20 mm	DX-RH	GAGGIA	SYNCRONYCOMPACT - SYNCRONYLOGIC - TITANIUM
1	**1251199**	ø 47.8/31.7 mm - ø 28/10 mm H20 mm	DX-RH	SAECO	CAFENOVA - INCANTO - ROYAL - ROYALCOFFEEBAR - VIENNA
2	**1251098**	ø 47.8/31.7 mm - ø 28/10 mm H20 mm	DX-RH	GAGGIA	SYNCRONYCOMPACT - SYNCRONYLOGIC - TITANIUM
2	**1251098**	ø 47.8/31.7 mm - ø 28/10 mm H20 mm	DX-RH	SAECO	CAFENOVA - INCANTO - ROYAL - ROYALCOFFEEBAR - VIENNA
3	**1251050**	ø 38/30 mm - ø 26/7 mm H17/20.3 mm	DX-RH	ISOMAC	MAVERICK PLUS - TEA BIS - ZAFFIRO BIS
3	**1251050**	ø 38/30 mm - ø 26/7 mm H17/20.3 mm	DX-RH	ARIETE	CAFE' ROMA DELUXE - CAFFE' ROMA PLUS
4	**1251250**	ø 43x26x7 mm	DX-RH	QUICK MILL	03035 PEGASO - 0835
4	**1251099**	ø 43x25x6.5 mm	SX-LH	SAECO	RIOPROFI - VIAVENEZIA
5	**1251146**	ø 48x28x6.5 mm	SX-LH	SAECO	INCANTO - ODEA - PRIMEA - TALEA

RANCILIO

1251072

COPPIA MACINE RANCILIO SX
ø esterno 75 mm - ø interno 43 mm
spessore 10,5 mm - 3 fori di fissaggio

GRINDING BURRS PAIR RANCILIO LH
external ø 75 mm - internal ø 43 mm
thickness 10.5 mm - 3 fixing holes

MAHLSCHEIBENPAAR RANCILIO L
Aussen-ø 75 mm - Innen-ø 43 mm
Dicke 10,5 mm - 3 Befestigungslöcher

PAREJA FRESAS RANCILIO IZQ
ø exterior 75 mm - ø interior 43 mm
espesor 10,5 mm - 3 agujeros de anclaje

RANCILIO 69000034

1251109

COPPIA MACINE RANCILIO SX
ø esterno 50 mm - ø interno 31 mm
altezza 8 mm - 3 fori di fissaggio

GRINDING BURRS PAIR RANCILIO LH
external ø 50 mm - internal ø 31 mm
height 8 mm - 3 fixing holes

MAHLSCHEIBENPAAR RANCILIO L
Aussen-ø 50 mm - Innen-ø 31 mm
Höhe 8 mm - 3 Befestigungslöcher

PAREJA FRESAS RANCILIO IZQ
ø exterior 50 mm - ø interior 31 mm
altura 8 mm - 3 agujeros de anclaje

RANCILIO 69000032

1251071

COPPIA MACINE RANCILIO-VFA SX
ø esterno 64 mm - ø interno 38 mm
spessore 9 mm - 3 fori di fissaggio

GRINDING BURRS PAIR RANCILIO-VFA LH
external ø 64 mm - internal ø 38 mm
thickness 9 mm - 3 fixing holes

MAHLSCHEIBENPAAR RANCILIO-VFA L
Aussen-ø 64 mm - Innen-ø 38 mm
Dicke 9 mm - 3 Befestigungslöcher

PAREJA FRESAS RANCILIO-VFA IZQ
ø exterior 64 mm - ø interior 38 mm
espesor 9 mm - 3 agujeros de anclaje

RANCILIO 69000033

RENEKA

1251125

COPPIA MACINE ASTORIA-MAHLKONIG SX
ø esterno 65 mm - ø interno 38 mm
spessore 8,4 mm - 2 fori fissaggio
ORIGINALE

GRINDING BURRS PAIR ASTORIA-MAHLKONIG LH
external ø 65 mm - internal ø 38 mm
thickness 8.4 mm - 2 fixing holes
ORIGINAL

MAHLSCHEIBENPAAR ASTORIA-MAHLKONIG L
Aussen-ø 65 mm - Innen-ø 38 mm
Dicke 8,4 mm - 2 Befestigungslöcher
ORIGINAL

PAREJA FRESAS ASTORIA-MAHLKONIG IZQ
ø exterior 65 mm - ø interior 38 mm
espesor 8,4 mm - 2 agujeros de anclaje
ORIGINAL

RENEKA

1251225

COPPIA MACINE ASTORIA-MAHLKONIG SX
ø esterno 65 mm - ø interno 38 mm
spessore 8,4 mm - 2 fori fissaggio

GRINDING BURRS PAIR ASTORIA-MAHLKONIG LH
external ø 65 mm - internal ø 38 mm
thickness 8.4 mm - 2 fixing holes

MAHLSCHEIBENPAAR ASTORIA-MAHLKONIG L
Aussen-ø 65 mm - Innen-ø 38 mm
Dicke 8,4 mm - 2 Befestigungslöcher

PAREJA FRESAS ASTORIA-MAHLKONIG IZQ
ø exterior 65 mm - ø interior 38 mm
espesor 8,4 mm - 2 agujeros de anclaje

RENEKA

1251061

COPPIA MACINE OBEL-CARIMALI SX
ø esterno 64 mm - ø interno 38 mm
spessore 9 mm - 3 fori di fissaggio

GRINDING BURRS PAIR OBEL-CARIMALI LH
external ø 64 mm - internal ø 38 mm
thickness 9 mm - 3 fixing holes

MAHLSCHEIBENPAAR OBEL-CARIMALI L
Aussen-ø 64 mm - Innen-ø 38 mm
Dicke 9 mm - 3 Befestigungslöcher

PAREJA FRESAS OBEL-CARIMALI IZQ
ø exterior 64 mm - ø interior 38 mm
espesor 9 mm - 3 agujeros de anclaje

RENEKA 0005000

ROSSI

1251076

COPPIA MACINE ROSSI CONICA DX
ø esterno 68/49 mm - ø interno 41/13 mm
spessore 25 mm - 4 fori di fissaggio
scanalatura interna per chiavetta

GRINDING BURRS PAIR ROSSI CONIC RH
external ø 68/49 mm - internal ø 41/13 mm
thickness 25 mm - 4 fixing holes
inner groove for feather key

MAHLSCHEIBENPAAR ROSSI KEGELF. R
Aussen-ø 68/49 mm - Innen-ø 41/13 mm
Dicke 25 mm - 4 Befestigungslöcher
innere Rille für Keil

PAREJA FRESAS ROSSI CÓNICA DCHA
ø exterior 68/49 mm - ø interior 41/13 mm
espesor 25 mm - 4 agujeros de anclaje
acanaladura interior p. llave

ROSSI 5585 ROSSI M5585

1251016

COPPIA MACINE ROSSI SX
ø esterno 50 mm - ø interno 31 mm
spessore 8,5 mm - 3 fori di fissaggio

MAHLSCHEIBENPAAR ROSSI L
Aussen-ø 50 mm - Innen-ø 31 mm
Dicke 8,5 mm - 3 Befestigungslöcher

GRINDING BURRS PAIR ROSSI LH
external ø 50 mm - internal ø 31 mm
thickness 8.5 mm - 3 fixing holes

PAREJA FRESAS ROSSI IZQ
ø exterior 50 mm - ø interior 31 mm
espesor 8,5 mm - 3 agujeros de anclaje

ROSSI 5198

1251094

COPPIA MACINE ROSSI SX
ø esterno 63,5 mm - ø interno 38 mm
spessore 9 mm - 3 fori di fissaggio

MAHLSCHEIBENPAAR ROSSI L
Aussen-ø 63,5 mm - Innen-ø 38 mm
Dicke 9 mm - 3 Befestigungslöcher

GRINDING BURRS PAIR ROSSI LH
external ø 63.5 mm - internal ø 38 mm
thickness 9 mm - 3 fixing holes

PAREJA FRESAS ROSSI IZQ
ø exterior 63,5 mm - ø interior 38 mm
espesor 9 mm - 3 agujeros de anclaje

ROSSI 4433.64

1251707

COPPIA MACINE ROSSI SX
MACINE "HEAVY DUTY" - durata maggiore del 70%
rispetto a una macina standard
non subiscono deformazioni
minor contaminazione del caffè macinato
ø esterno 63,5 mm - ø interno 38 mm
spessore 9 mm - 3 fori fissaggio

MAHLSCHEIBENPAAR ROSSI L
MAHLSCHEIBE "HEAVY DUTY" - Dauer 70% länger
als eine Standardmahlscheibe
sie deformieren nicht
niedrigere Kontamination des gemahlenen Kaffees
Aussen-ø 63,5 mm - Innen-ø 38 mm
Stärke 9 mm - 3 Befestigungslöcher

GRINDING BURRS PAIR ROSSI LH
BURRS "HEAVY DUTY" - duration increased by 70%
compared to a standard grinding burr
they do not deform
lower contamination of ground coffee
external ø 63.5 mm - internal ø 38 mm
thickness 9 mm - 3 fixing holes

PAREJA FRESAS ROSSI IZQ
FRESAS "HEAVY DUTY" - duración superior al 70%
en comparación con una fresa estándar
no padecen deformaciones
menor contaminación del café molido
ø exterior 63,5 mm - ø interior 38 mm
espesor 9 mm - 3 agujeros anclaje

ROSSI

1251011

COPPIA MACINE ROSSI-ASTRAL SX
ø esterno 64 mm - ø interno 38 mm
spessore 9 mm - 3 fori di fissaggio

MAHLSCHEIBENPAAR ROSSI-ASTRAL L
Aussen-ø 64 mm - Innen-ø 38 mm
Dicke 9 mm - 3 Befestigungslöcher

GRINDING BURRS PAIR ROSSI-ASTRAL LH
external ø 64 mm - internal ø 38 mm
thickness 9 mm - 3 fixing holes

PAREJA FRESAS ROSSI-ASTRAL IZQ
ø exterior 64 mm - ø interior 38 mm
espesor 9 mm - 3 agujeros de anclaje

ROSSI 4433

SAECO

MACINE VARI MARCHI
BURRS VARIOUS BRANDS
MÜHLEN VERSCHIEDENE MARKEN
FRESAS VARIAS MARCAS

1 - Original 2 - Suitable 3 4 5

Photo	LF Code	Dimensions	LH/RH	Suitable for	For machine model
1	**1251199**	ø 47.8/31.7 mm - ø 28/10 mm H20 mm	DX-RH	GAGGIA	SYNCRONYCOMPACT - SYNCRONYLOGIC - TITANIUM
1	**1251199**	ø 47.8/31.7 mm - ø 28/10 mm H20 mm	DX-RH	SAECO	CAFENOVA - INCANTO - ROYAL - ROYALCOFFEEBAR - VIENNA
2	**1251098**	ø 47.8/31.7 mm - ø 28/10 mm H20 mm	DX-RH	GAGGIA	SYNCRONYCOMPACT - SYNCRONYLOGIC - TITANIUM
2	**1251098**	ø 47.8/31.7 mm - ø 28/10 mm H20 mm	DX-RH	SAECO	CAFENOVA - INCANTO - ROYAL - ROYALCOFFEEBAR - VIENNA
3	**1251050**	ø 38/30 mm - ø 26/7 mm H17/20.3 mm	DX-RH	ISOMAC	MAVERICK PLUS - TEA BIS - ZAFFIRO BIS
3	**1251050**	ø 38/30 mm - ø 26/7 mm H17/20.3 mm	DX-RH	ARIETE	CAFE' ROMA DELUXE - CAFFE' ROMA PLUS
4	**1251250**	ø 43x26x7 mm	DX-RH	QUICK MILL	03035 PEGASO - 0835
4	**1251099**	ø 43x25x6.5 mm	SX-LH	SAECO	RIOPROFI - VIAVENEZIA
5	**1251146**	ø 48x28x6.5 mm	SX-LH	SAECO	INCANTO - ODEA - PRIMEA - TALEA

1251173

COPPIA MACINE GAGGIA DX
ø esterno 64 mm - ø interno 37 mm
spessore 8,5 mm - 3 fori di fissaggio

MAHLSCHEIBENPAAR GAGGIA R
Aussen-ø 64 mm - Innen-ø 37 mm
Dicke 8,5 mm - 3 Befestigungslöcher

SAECO 9141.072 SAECO 9141.072_2PZ

GRINDING BURRS PAIR GAGGIA RH
external ø 64 mm - internal ø 37 mm
thickness 8.5 mm - 3 fixing holes

PAREJA FRESAS GAGGIA DCHA
ø exterior 64 mm - ø interior 37 mm
espesor 8,5 mm - 3 agujeros de anclaje

SAN MARCO

1251134

COPPIA MACINE SAN MARCO CONICA DX
ø esterno 68/49 mm - ø interno 40/13 mm
spessore 25 mm - 4 fori di fissaggio

MAHLSCHEIBENPAAR SAN MARCO KEGELF. R
Aussen-ø 68/49 mm - Innen-ø 40/13 mm
Dicke 25 mm - 4 Befestigungslöcher

SAN MARCO 202251

GRINDING BURRS PAIR SAN MARCO CONIC RH
external ø 68/49 mm - internal ø 40/13 mm
thickness 25 mm - 4 fixing holes

PAREJA FRESAS SAN MARCO CÓNICA DCHA
ø exterior 68/49 mm - ø interior 40/13 mm
espesor 25 mm - 4 agujeros de anclaje

1251086

COPPIA MACINE SAN MARCO DX
ø esterno 64 mm - ø interno 37 mm
spessore 8,5 mm - 3 fori di fissaggio

GRINDING BURRS PAIR SAN MARCO RH
external ø 64 mm - internal ø 37 mm
thickness 8.5 mm - 3 fixing holes

MAHLSCHEIBENPAAR SAN MARCO R
Aussen-ø 64 mm - Innen-ø 37 mm
Dicke 8,5 mm - 3 Befestigungslöcher

PAREJA FRESAS SAN MARCO DCHA
ø exterior 64 mm - ø interior 37 mm
espesor 8,5 mm - 3 agujeros de anclaje

SAN MARCO 202174

1251087

COPPIA MACINE SAN MARCO DX
ø esterno 84 mm - ø interno 45 mm
spessore 9 mm - 3 fori di fissaggio

GRINDING BURRS PAIR SAN MARCO RH
external ø 84 mm - internal ø 45 mm
thickness 9 mm - 3 fixing holes

MAHLSCHEIBENPAAR SAN MARCO R
Aussen-ø 84 mm - Innen-ø 45 mm
Dicke 9 mm - 3 Befestigungslöcher

PAREJA FRESAS SAN MARCO DCHA
ø exterior 84 mm - ø interior 45 mm
espesor 9 mm - 3 agujeros de anclaje

SAN MARCO 202213 SAN MARCO 202254

1251012

COPPIA MACINE SEMICONICA SAN MARCO DX
ø esterno 84/45 mm - ø interno 50/13 mm
spessore 18/9 mm - 3 fori di fissaggio

GRINDING BURRS P. SEMICONIC SAN MARCO RH
external ø 84/45 mm - internal ø 50/13 mm
thickness 18/9 mm - 3 fixing holes

MAHLSCHEIBENPAAR SEMIKEGELF. SAN MARCO R
Aussen-ø 84/45 mm - Innen-ø 50/13 mm
Dicke 18/9 mm - 3 Befestigungslöcher

PAREJA FRESAS SEMICÓNICA SAN MARCO DCHA
ø exterior 84/45 mm - ø interior 50/13 mm
espesor 18/9 mm - 3 agujeros de anclaje

SAN MARCO 202250

SPAZIALE

1251101

COPPIA MACINE MACAP CONICHE DX
ø esterno 63/40 mm - ø interno 33/13 mm
spessore 23 mm - 3 fori di fissaggio

GRINDING BURRS PAIR MACAP CONIC RH
external ø 63/40 mm - internal ø 33/13 mm
thickness 23 mm - 3 fixing holes

MAHLSCHEIBENPAAR MACAP KEGELF. R
Aussen-ø 63/40 mm - Innen-ø 33/13 mm
Dicke 23 mm - 3 Befestigungslöcher

PAREJA FRESAS MACAP CÓNICAS DCHA
ø exterior 63/40 mm - ø interior 33/13 mm
espesor 23 mm - 3 agujeros de anclaje

SPAZIALE 8785

1251302

COPPIA MACINE MACAP DX
ø esterno 68 mm - ø interno 38 mm
spessore 9 mm - 3 fori di fissaggio

GRINDING BURRS PAIR MACAP RH
external ø 68 mm - internal ø 38 mm
thickness 9 mm - 3 fixing holes

MAHLSCHEIBENPAAR MACAP R
Aussen-ø 68 mm - Innen-ø 38 mm
Dicke 9 mm - 3 Befestigungslöcher

PAREJA FRESAS MACAP DCHA
ø exterior 68 mm - ø interior 38 mm
espesor 9 mm - 3 agujeros de anclaje

SPAZIALE 7758

1251304

COPPIA MACINE MACAP DX
ø esterno 65 mm - ø interno 38 mm
spessore 8,5 mm - 3 fori di fissaggio

MAHLSCHEIBENPAAR MACAP R
Aussen-ø 65 mm - Innen-ø 38 mm
Dicke 8,5 mm - 3 Befestigungslöcher

SPAZIALE 3276

GRINDING BURRS PAIR MACAP RH
external ø 65 mm - internal ø 38 mm
thickness 8.5 mm - 3 fixing holes

PAREJA FRESAS MACAP DCHA
ø exterior 65 mm - ø interior 38 mm
espesor 8,5 mm - 3 agujeros de anclaje

1251062

COPPIA MACINE OBEL SX
ø esterno 50 mm - ø interno 30 mm
spessore 8 mm - 3 fori di fissaggio

MAHLSCHEIBENPAAR OBEL L
Aussen-ø 50 mm - Innen-ø 30 mm
Dicke 8 mm - 3 Befestigungslöcher

SPAZIALE 4285

GRINDING BURRS PAIR OBEL LH
external ø 50 mm - internal ø 30 mm
thickness 8 mm - 3 fixing holes

PAREJA FRESAS OBEL IZQ
ø exterior 50 mm - ø interior 30 mm
espesor 8 mm - 3 agujeros de anclaje

VFA EXPRES

1251071

COPPIA MACINE RANCILIO-VFA SX
ø esterno 64 mm - ø interno 38 mm
spessore 9 mm - 3 fori di fissaggio

MAHLSCHEIBENPAAR RANCILIO-VFA L
Aussen-ø 64 mm - Innen-ø 38 mm
Dicke 9 mm - 3 Befestigungslöcher

VFA EXPRES 946005 VFA EXPRES 966005

GRINDING BURRS PAIR RANCILIO-VFA LH
external ø 64 mm - internal ø 38 mm
thickness 9 mm - 3 fixing holes

PAREJA FRESAS RANCILIO-VFA IZQ
ø exterior 64 mm - ø interior 38 mm
espesor 9 mm - 3 agujeros de anclaje

VIBIEMME

1251084

COPPIA MACINE FIORENZATO CS DX
ø esterno 83 mm - ø interno 45 mm
spessore 10 mm - 3 fori di fissaggio

MAHLSCHEIBENPAAR FIORENZATO CS R
Aussen-ø 83 mm - Innen-ø 45 mm
Dicke 10 mm - 3 Befestigungslöcher

VIBIEMME MACCMADSVB83

GRINDING BURRS PAIR FIORENZATO CS RH
external ø 83 mm - internal ø 45 mm
thickness 10 mm - 3 fixing holes

PAREJA FRESAS FIORENZATO CS DCHA
ø exterior 83 mm - ø interior 45 mm
espesor 10 mm - 3 agujeros de anclaje

1251078

COPPIA MACINE FIORENZATO CS/QUAMAR DX
ø esterno 63 mm - ø interno 38 mm
spessore 9,5 mm - 3 fori di fissaggio

GRIND. BURRS P. FIORENZATO CS/QUAMAR RH
external ø 63 mm - internal ø 38 mm
thickness 9.5 mm - 3 fixing holes

MAHLSCHEIBENPAAR FIORENZATO CS/QUAMAR R
Aussen-ø 63 mm - Innen-ø 38 mm
Dicke 9,5 mm - 3 Befestigungslöcher

PAREJA FRESAS FIORENZATO CS/QUAMAR DCHA
ø exterior 63 mm - ø interior 38 mm
espesor 9,5 mm - 3 agujeros de anclaje

VIBIEMME MACCMADSVB63

WEGA

1251138

COPPIA MACINE COMPAK DX
ø esterno 58 mm - ø interno 33 mm
spessore 8,5 mm - 3 fori fissaggio

GRINDING BURRS PAIR COMPAK RH
external ø 58 mm - internal ø 33 mm
thickness 8.5 mm - 3 fixing holes

MAHLSCHEIBENPAAR COMPAK R
Aussen-ø 58 mm - Innen-ø 33 mm
Dicke 8,5 mm - 3 Befestigungslöcher

PAREJA FRESAS COMPAK DCHA
ø exterior 58 mm - ø interior 33 mm
espesor 8,5 mm - 3 agujeros de anclaje

WEGA WY28217014

1251140

COPPIA MACINE COMPAK DX
ø esterno 82,5 mm - ø interno 49 mm
spessore 9,5 mm - 3 fori fissaggio

GRINDING BURRS PAIR COMPAK RH
external ø 82.5 mm - internal ø 49 mm
thickness 9.5 mm - 3 fixing holes

MAHLSCHEIBENPAAR COMPAK R
Aussen-ø 82,5 mm - Innen-ø 49 mm
Dicke 9,5 mm - 3 Befestigungslöcher

PAREJA FRESAS COMPAK DCHA
ø exterior 82,5 mm - ø interior 49 mm
espesor 9,5 mm - 3 agujeros de anclaje

WEGA WY28217011

1251501

COPPIA MACINE COMPAK DX
ø esterno 60 mm - ø interno 36 mm
spessore 8 mm - 3 fori di fissaggio

GRINDING BURRS PAIR COMPAK RH
external ø 60 mm - internal ø 36 mm
thickness 8 mm - 3 fixing holes

MAHLSCHEIBENPAAR COMPAK R
Aussen-ø 60 mm - Innen-ø 36 mm
Dicke 8 mm - 3 Befestigungslöcher

PAREJA FRESAS COMPAK DCHA
ø exterior 60 mm - ø interior 36 mm
espesor 8 mm - 3 agujeros de anclaje

WEGA WY28217006

1251092

COPPIA MACINE COMPAK-WEGA DX
ø esterno 63 mm - ø interno 38 mm
spessore 9 mm - 3 fori di fissaggio

GRINDING BURRS PAIR COMPAK-WEGA RH
external ø 63 mm - internal ø 38 mm
thickness 9 mm - 3 fixing holes

MAHLSCHEIBENPAAR COMPAK-WEGA R
Aussen-ø 63 mm - Innen-ø 38 mm
Dicke 9 mm - 3 Befestigungslöcher

PAREJA FRESAS COMPAK-WEGA DCHA
ø exterior 63 mm - ø interior 38 mm
espesor 9 mm - 3 agujeros de anclaje

WEGA

1251093

COPPIA MACINE COMPAK-WEGA DX
ø esterno 80 mm - ø interno 41 mm
spessore 10 mm - 3 fori di fissaggio

GRINDING BURRS PAIR COMPAK-WEGA RH
external ø 80 mm - internal ø 41 mm
thickness 10 mm - 3 fixing holes

MAHLSCHEIBENPAAR COMPAK-WEGA R
Aussen-ø 80 mm - Innen-ø 41 mm
Dicke 10 mm - 3 Befestigungslöcher

PAREJA FRESAS COMPAK-WEGA DCHA
ø exterior 80 mm - ø interior 41 mm
espesor 10 mm - 3 agujeros de anclaje

WEGA WY28217005

1251504

COPPIA MACINE COMPAK-WEGA DX
ø esterno 63,5 mm - ø interno 38 mm
spessore 9 mm - 3 fori di fissaggio

GRINDING BURRS PAIR COMPAK-WEGA RH
external ø 63.5 mm - internal ø 38 mm
thickness 9 mm - 3 fixing holes

MAHLSCHEIBENPAAR COMPAK-WEGA R
Aussen-ø 63,5 mm - Innen-ø 38 mm
Dicke 9 mm - 3 Befestigungslöcher

PAREJA FRESAS COMPAK-WEGA DCHA
ø exterior 63,5 mm - ø interior 38 mm
espesor 9 mm - 3 agujeros de anclaje

WEGA WY28217000

1251701

COPPIA MACINE COMPAK-WEGA DX
MACINE "HEAVY DUTY" - durata maggiore del 70%
rispetto a una macina standard
non subiscono deformazioni
minor contaminazione del caffè macinato
ø esterno 63 mm - ø interno 38 mm
spessore 9 mm - 3 fori fissaggio

GRINDING BURRS PAIR COMPAK-WEGA RH
GRIND BURRS "HEAVY DUTY" +70% longer life cycle
compared to a standard grinding burr
they do not deform
less contamination of ground coffee
external ø 63 mm - internal ø 38 mm
thickness 9 mm - 3 fixing holes

MAHLSCHEIBENPAAR COMPAK-WEGA R
MAHLSCHEIBE "HEAVY DUTY" - Lebensdauer +70%
als Standard-Mahlscheibe
sie deformieren nicht
weniger Kontamination des gemahlenen Kaffees
Aussen-ø 63 mm - Innen-ø 38 mm
Stärke 9 mm - 3 Befestigungslöcher

PAREJA FRESAS COMPAK-WEGA DCHA
FRESAS "HEAVY DUTY" - duración superior al 70%
respecto de una fresa estándar
no se deforman
menor contaminación del café molido
ø exterior 63 mm - ø interior 38 mm
espesor 9 mm - 3 agujeros de anclaje

WEGA

VARI • MISCELLANEOUS • VERSCHIEDENES • VARIOS

MACINE DELONGHI
BURRS DELONGHI
MAHLSCHEIBEN DELONGHI
MOLINOS DELONGHI

1

2

3

Photo	LF Code	Notes	Suitable for	For machine model
1	**D251001**	230V	DELONGHI 7313227621	ECAM21.210 - ECAM23.210 - ECAM23.420 - ECAM23.450
2	**D251004**	230V	DELONGHI 7313230461	ESAM3600 - ESAM5500 - ESAM6600 - ESAM6620 - ESAM6650 - ESAM6700
3	**5058492**	230V	DELONGHI 7332203600	ESAM2800 - ESAM3200 - ESAM3500 - ESAM4400 - ESAM5400 - ESAM6600

MACINE DELONGHI
BURRS DELONGHI
MAHLSCHEIBEN DELONGHI
MOLINOS DELONGHI

1

2

3

4

Photo	LF Code	Notes	Suitable for	For machine model
1	**D251003**	230V	DELONGHI 7313230501	ECAM21.110 - ECAM21.117 - ECAM22.110 - ECAM22.113 - ECAM23.420
2	**D251002**	230V	DELONGHI 7313230521	ECAM23.450 - ECAM23.460 - ECAM23.463 - ECAM24.450 - ECAM25.452
3	**1251213**	230V	DELONGHI 7313230951	ECAM28.465 - ETAM36.365.M
4	**5081411**	230V	DELONGHI 7313234141	ETAM36.365.M

1251190

COPPIA MACINE MAZZER DX
ø esterno 58 mm - ø interno 33,5 mm
spessore 8,5 mm - 3 fori di fissaggio

MAHLSCHEIBENPAAR MAZZER R
Aussen-ø 58 mm - Innen-ø 33,5 mm
Dicke 8,5 mm - 3 Befestigungslöcher

GRINDING BURRS PAIR MAZZER RH
external ø 58 mm - internal ø 33.5 mm
thickness 8.5 mm - 3 fixing holes

PAREJA FRESAS MAZZER DCHA
ø exterior 58 mm - ø interior 33,5 mm
espesor 8,5 mm - 3 agujeros de anclaje

MANOMETRI ASTORIA/CMA
PRESSURE GAUGES ASTORIA/CMA
MANOMETER ASTORIA/CMA
MANÓMETROS ASTORIA/CMA

1

2

3

4

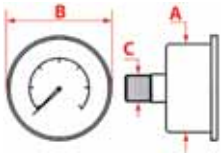

Photo	LF Code	Scale (bar)	Dimensions A - B - C (mm)	Suitable for	For machine model
1	**1245100**	0÷2.5	41 - 44 - 1/8	ASTORIA/CMA 21105	CK - CKE - CKX - CKXE
2	**1245507**	0÷3	52 - 57 - 1/4	ASTORIA/CMA 21101	ARGENTA - DORA
3	**1245021**	0÷3	62 - 64 - 1/4	ASTORIA/CMA 21111	DENISE - DIVINA - LISA - VANIA
4	**1245033**	0÷3	62 - 64 - 1/4	ASTORIA/CMA 21113	GLORIA - RAPALLO - RAPALLO AL

MANOMETRI ASTORIA/CMA
PRESSURE GAUGES ASTORIA/CMA
MANOMETER ASTORIA/CMA
MANÓMETROS ASTORIA/CMA

1

2

3

4

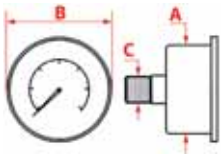

Photo	LF Code	Scale (bar)	Dimensions A - B - C (mm)	Suitable for	For machine model
1	**1245504**	0÷2.5/0÷16	60 - 65 - 1/8	ASTORIA/CMA 21104	ARGENTA
2	**1245502**	0÷2.5/0÷16	60 - 65 - 1/8	ASTORIA/CMA	ARGENTA
3	**1245503**	0÷2.5/0÷15	60 - 65 - 1/8	ASTORIA/CMA	ARGENTA
4	**1245505**	0÷2.5/0÷16	60 - 65 - 1/8	ASTORIA/CMA	ARGENTA

MANOMETRI ASTORIA/CMA
PRESSURE GAUGES ASTORIA/CMA
MANOMETER ASTORIA/CMA
MANÓMETROS ASTORIA/CMA

1

2

3

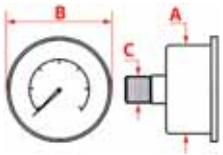

Photo	LF Code	Scale (bar)	Dimensions A - B - C (mm)	Suitable for	For machine model
1	**1245032**	0÷3.0/0÷15	63 - 70 - 1/8	ASTORIA/CMA 21112	CALYPSO-GLORIA-GLORIAR12-RAPALLO-RAPALLOAL
2	**1245411**	0÷2.5/0÷16	63 - 70 - 1/8	ASTORIA/CMA 21109	DENISE-DIVINA-GIADA-LISA-PERLA4D-PRATICNEW
3	**1245532**	0÷2.5/0÷15	63 - 70 - 1/8	ASTORIA/CMA	DENISE-DIVINA-GIADA-LISA-PERLA4D-PRATICNEW

MANOMETRI BEZZERA
PRESSURE GAUGES BEZZERA
MANOMETER BEZZERA
MANÓMETROS BEZZERA

1

2

3

4

5

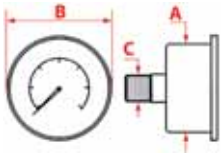

Photo	LF Code	Scale (bar)	Dimensions A - B - C (mm)	Suitable for	For machine model
1	**1245021**	0÷3	62 - 64 - 1/4	BEZZERA 7432513	EBBIS AL - ELLISSE AL
2	**1245082**	0÷3	39 - 44 - 1/8	BEZZERA 7432522	GALATEA DOMUS - GUILIA - STREGA
3	**5062106**	0÷16	39 - 44 - 1/8	BEZZERA 7432523	BZ09 - BZ13 - GALATEA DOMUS - GIULIA - UNICA
4	**1245527**	0÷22	52 - 57 - 1/4	BEZZERA 7432509	VERTICALE
5	**1245526**	0÷3	60 - 65 - 1/8	BEZZERA 7432507	B2000AL - B2006AL

MANOMETRI BEZZERA
PRESSURE GAUGES BEZZERA
MANOMETER BEZZERA
MANÓMETROS BEZZERA

1

2

3

4

5

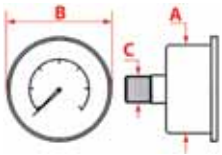

Photo	LF Code	Scale (bar)	Dimensions A - B - C (mm)	Suitable for	For machine model
1	**1245555**	0÷3.0/0÷15	60 - 65 - 1/8	BEZZERA 7432524	BZ10 - BZ13 - B2009 - B2013
2	**1245083**	0÷2.5/0÷16	63 - 70 - 1/8	BEZZERA 7432528	B6000 - EBBIS - ELLISSE NEW
3	**1245018**	0÷2.5/0÷16	63 - 70 - 1/8	BEZZERA 7432502	B6000 - EBBIS - ELLISSE
4	**1245019**	0÷3.0/0÷15	63 - 70 - 1/8	BEZZERA 7432503	B2000 - B3000 - BZ40
5	**1245532**	0÷2.5/0÷15	63 - 70 - 1/8	BEZZERA 5963037	B2000 - B2006 - B4000 - BZ40

MANOMETRI BFC
PRESSURE GAUGES BFC
MANOMETER BFC
MANOMETROS BFC

1

2

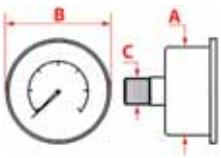

Photo	LF Code	Scale (bar)	Dimensions A - B - C (mm)	Suitable for	For machine model
1	**1245043**	0÷2.5/0÷15	63 - 70 - 1/8	BFC 4551014	CLASSICA - DELUX - GRANDOGE - IMOLA - LIRA - MARANELLO
2	**1245050**	0÷3.0/0÷15	63 - 70 - 1/8	BFC 4551017	DELUX - IMOLA - LIRA - MARANELLO - MONZA

MANOMETRI BIANCHI
PRESSURE GAUGES BIANCHI
MANOMETER BIANCHI
MANÓMETROS BIANCHI

1

2

3

4

5

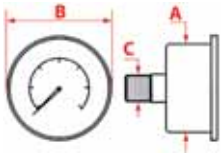

Photo	LF Code	Scale (bar)	Dimensions A - B - C (mm)	Suitable for	For machine model
1	**1245063**	0÷2.5	52 - 57 - 1/8	BIANCHI 25034816-01	SOFIA
2	**1245062**	0÷15	52 - 57 - 1/8	BIANCHI 25034716-01	SOFIA
3	**1245554**	0÷3	52 - 71 - 1/8	BIANCHI 25035116-01	LUCIA
4	**1245553**	0÷16	52 - 71 - 1/8	BIANCHI 25035016-01	LUCIA
5	**1245411**	0÷2.5/0÷16	63 - 70 - 1/8	BIANCHI 25034626-01	SARA

MANOMETRI BRASILIA
PRESSURE GAUGES BRASILIA
MANOMETER BRASILIA
MANÓMETROS BRASILIA

1

2

3

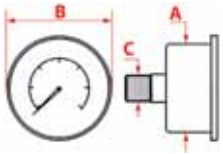

Photo	LF Code	Scale (bar)	Dimensions A - B - C (mm)	Suitable for	For machine model
1	**1245009**	0÷2.5/0÷15	63 - 70 - 1/8	BRASILIA 00737.2.00.08	GRADISCA
2	**1245532**	0÷2.5/0÷15	63 - 70 - 1/8	BRASILIA 06622.2.00.08	FIRENZE
3	**1245535**	0÷2.5/0÷16	63 - 70 - 1/8	BRASILIA 06555.2.00.08	PORTOFINO

MANOMETRI BRUGNETTI/AURORA
PRESSURE GAUGES BRUGNETTI/AURORA
MANOMETER BRUGNETTI/AURORA
MANÓMETROS BRUGNETTI/AURORA

1

2

3

4

5

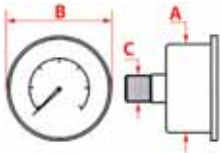

Photo	LF Code	Scale (bar)	Dimensions A - B - C (mm)	Suitable for	For machine model
1	**1245507**	0÷3	52 - 57 - 1/4	BRUGNETTI	---
2	**1245503**	0÷2.5/0÷15	60 - 65 - 1/8	BRUGNETTI	---
3	**1245502**	0÷2.5/0÷16	60 - 65 - 1/8	BRUGNETTI	---
4	**1245504**	0÷2.5/0÷16	60 - 65 - 1/8	BRUGNETTI	---
5	**1245532**	0÷2.5/0÷15	63 - 70 - 1/8	BRUGNETTI	---

MANOMETRI CARIMALI
PRESSURE GAUGES CARIMALI
MANOMETER CARIMALI
MANÓMETROS CARIMALI

1

2

3

4

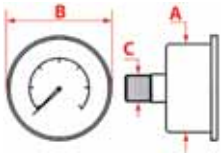

Photo	LF Code	Scale (bar)	Dimensions A - B - C (mm)	Suitable for	For machine model
1	**5023799**	0÷2.5	41 - 43 - 1/8	CARIMALI 95.01378	AROMA - ECOLUX - SISTEMA
2	**1245080**	0÷20	41 - 43 - 1/8	CARIMALI 95.01185	AROMA
3	**1245502**	0÷2.5/0÷16	60 - 65 - 1/8	CARIMALI	ESPRESSO9 - ETABETAV2 - KIKKO - TEMA STYLE
4	**5037468**	0÷2.5/0÷16	60 - 65 - 1/8	CARIMALI 95.01545	ESPRESSO9 - ETABETAV2 - KIKKO - TEMA STYLE

MANOMETRI CASADIO
PRESSURE GAUGES CASADIO
MANOMETER CASADIO
MANÓMETROS CASADIO

1

2

3

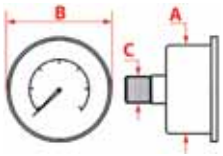

Photo	LF Code	Scale (bar)	Dimensions A - B - C (mm)	Suitable for	For machine model
1	**1245047**	0÷2.5/0÷16	62 - 62 - 1/8	CASADIO 421289010	DIECIA - DIECIS - DODICIA - DODICIS - VENTI
2	**1245094**	0÷3.0/0÷15	62 - 62 - 1/8	CASADIO 421289010	DIECIA - DIECIS - DODICIA - DODICIS - VENTI
3	**1245091**	0÷2.5/0÷16	62 - 62 - 1/8	CASADIO 978017000	UNDICI

MANOMETRI CIMBALI
PRESSURE GAUGES CIMBALI
MANOMETER CIMBALI
MANÓMETROS CIMBALI

1

2

3

4

5

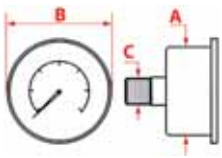

Photo	LF Code	Scale (bar)	Dimensions A - B - C (mm)	Suitable for	For machine model
1	**1245556**	0÷2.5	42 - 43 - 1/8	CIMBALI 3781-133-400	M39
2	**1245557**	0÷16	42 - 43 - 1/8	CIMBALI 3781-133-399	M39 - M39GT
3	**1245003**	0÷2.5	57 - 57 - 1/8	CIMBALI 445-028-000	M31 - M32
4	**1245004**	0÷16	57 - 57 - 1/8	CIMBALI 445-029-000	M31 - M32
5	**1245053**	0÷2.5	57 - 60 - 1/8	CIMBALI 445-168-000	M29SELECT - M31BISTRO - M32BISTRO

MANOMETRI CIMBALI
PRESSURE GAUGES CIMBALI
MANOMETER CIMBALI
MANÓMETROS CIMBALI

1

2

3

4

5

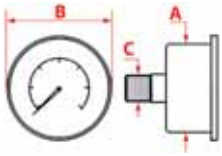

Photo	LF Code	Scale (bar)	Dimensions A - B - C (mm)	Suitable for	For machine model
1	**1245541**	0÷2.5	57 - 60 - 1/8	CIMBALI	M15 - M20 - M27 - M30
2	**1245542**	0÷2.5	57 - 60 - 1/4	CIMBALI	M15 - M20 - M27 - M30
3	**1245546**	0÷2.5	57 - 60 - 1/8	CIMBALI 450-524-000	M21JUNIOR - M21PLUS - M25 - M27 - M28 - M30
4	**1245545**	0÷15	57 - 60 - 1/8	CIMBALI 496-246-000	M30
5	**1245054**	0÷2.5	57 - 60 - 1/8	CIMBALI 492-085-000	M29

MANOMETRI CIMBALI
PRESSURE GAUGES CIMBALI
MANOMETER CIMBALI
MANÓMETROS CIMBALI

1

2

3

4

5

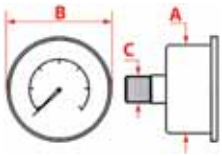

Photo	LF Code	Scale (bar)	Dimensions A - B - C (mm)	Suitable for	For machine model
1	**1245505**	0÷2.5/0÷16	60 - 65 - 1/8	CIMBALI 421-289-000	M22 - M29
2	**1245047**	0÷2.5/0÷16	62 - 62 - 1/8	CIMBALI 421-289-010	M21JUNIOR - M22 - M24 - M29
2	**1245094**	0÷3.0/0÷15	62 - 62 - 1/8	CIMBALI 421-289-010	M21JUNIOR - M22 - M24 - M29
3	**1245022**	0÷2.5/0÷16	63 - 70 - 1/8	CIMBALI 3781-133-765	M27/2008
4	**1245544**	0÷2.5/0÷15	63 - 70 - 1/8	CIMBALI 421-127-000	M20
5	**1245090**	0÷16	62 - 62.8 - 1/8	CIMBALI 531-196-010	M100

MANOMETRI CONTI
PRESSURE GAUGES CONTI
MANOMETER CONTI
MANÓMETROS CONTI

1

2

3

4

5

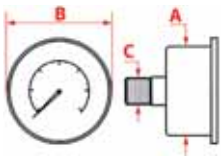

Photo	LF Code	Scale (bar)	Dimensions A - B - C (mm)	Suitable for	For machine model
1	**1245301**	0÷3	62 - 62 - 1/4	CONTI 404325	CLASSICA - CLUB
2	**1245300**	0÷16	62 - 62 - 1/4	CONTI	CLASSICA - CLUB
3	**1242005**	0÷2.5/0÷16	63 - 70 - 1/8	CONTI 407710	XEOS2
4	**1242007**	0÷4.0/0÷16	63 - 70 - 1/8	CONTI 410888	TWIN STAR2
5	**1245532**	0÷2.5/0÷15	63 - 70 - 1/8	CONTI	---

MANOMETRI ECM
PRESSURE GAUGES ECM
MANOMETER ECM
MANÓMETROS ECM

1

2

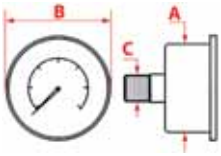

Photo	LF Code	Scale (bar)	Dimensions A - B - C (mm)	Suitable for	For machine model
1	**1245546**	0÷2.5	57 - 60 - 1/8	ECM	---
2	**1245545**	0÷15	57 - 60 - 1/8	ECM	---

MANOMETRI ECM MANUFACTURE
PRESSURE GAUGES ECM MANUFACTURE
MANOMETER ECM MANUFACTURE
MANÓMETROS ECM MANUFACTURE

1

2

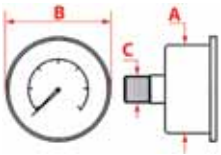

Photo	LF Code	Scale (bar)	Dimensions A - B - C (mm)	Suitable for	For machine model
1	**1245082**	0÷3	44 - 39 - 1/8	ECM MANUFACTURE B7432516	ELEKTRONIKA II PROFI - MECHANIKA
2	**5062106**	0÷16	44 - 39 - 1/8	ECM MANUFACTURE B7432517	CLASSIKA II - ELEKTRONIKA II PROFI - MECHANIKA

MANOMETRI ELEKTRA
PRESSURE GAUGES ELEKTRA
MANOMETER ELEKTRA
MANÓMETROS ELEKTRA

1

2

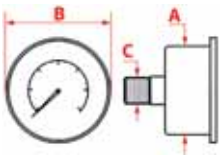

Photo	LF Code	Scale (bar)	Dimensions A - B - C (mm)	Suitable for	For machine model
1	**1245008**	0÷3	42 - 42 - 1/8	ELEKTRA 00143035	MICROCASA
2	**1245005**	0÷3	42 - 42 - 1/8	ELEKTRA 00398035	MICROCASA

MANOMETRI ELEKTRA
PRESSURE GAUGES ELEKTRA
MANOMETER ELEKTRA
MANÓMETROS ELEKTRA

1

2

3

4

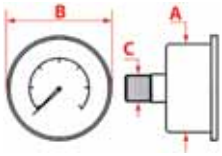

Photo	LF Code	Scale (bar)	Dimensions A - B - C (mm)	Suitable for	For machine model
1	**1245006**	0÷2/0÷16	60 - 60 - 1/8	ELEKTRA 00985014	CLASSIC - BARLUME - SIXTIES
2	**1245007**	0÷2/0÷16	60 - 60 - 1/8	ELEKTRA 00985026	MODERN - SIXTIES
3	**1245060**	0÷3/0÷15	60 - 60 - 1/8	ELEKTRA	CLASSIC - BARLUME - SIXTIES
4	**1245070**	0÷3/0÷15	60 - 60 - 1/8	ELEKTRA	MODERN - SIXTIES

MANOMETRI EXPOBAR
PRESSURE GAUGES EXPOBAR
MANOMETER EXPOBAR
MANÓMETROS EXPOBAR

1

2

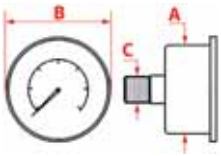

Photo	LF Code	Scale (bar)	Dimensions A - B - C (mm)	Suitable for	For machine model
1	**3245020**	0÷3	43 - 48 - 1/8	EXPOBAR 60000060	MEGACREM
2	**1245042**	0÷2.5	60 - 65 - 1/8	EXPOBAR 60000065	EB61 - EXPRESSO - MARKUS - MEGACREM

MANOMETRI FAEMA
PRESSURE GAUGES FAEMA
MANOMETER FAEMA
MANÓMETROS FAEMA

1

2

3

4

5

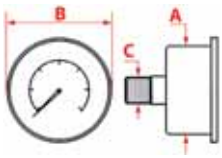

Photo	LF Code	Scale (bar)	Dimensions A - B - C (mm)	Suitable for	For machine model
1	**1245556**	0÷2.5	42 - 43 - 1/8	FAEMA 3781133400	ELITE - E91 - E92
2	**1245557**	0÷16	42 - 43 - 1/8	FAEMA 3781133401	ELITE - E91 - E92
3	**1245554**	0÷3	52 - 71 - 1/8	FAEMA 3781135802	E61
4	**1245553**	0÷16	52 - 71 - 1/8	FAEMA 3781135801	E61
5	**1245053**	0÷2.5	57 - 60 - 1/8	FAEMA 445168000	E98COMPACT

MANOMETRI FAEMA
PRESSURE GAUGES FAEMA
MANOMETER FAEMA
MANÓMETROS FAEMA

1

2

3

4

5

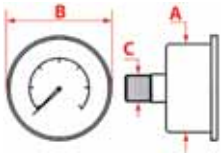

Photo	LF Code	Scale (bar)	Dimensions A - B - C (mm)	Suitable for	For machine model
1	**1245555**	0÷3/0÷15	60 - 65 - 1/8	FAEMA	E64 - E66
2	**1245088**	0÷16	62 - 85 - 1/8	FAEMA 531194500	EMBLEMA
3	**1245022**	0÷2.5/0÷16	63 - 70 - 1/8	FAEMA 3781133765	ENOVA - STYLEMA
4	**1245551**	0÷2.5/0÷15	63 - 70 - 1/8	FAEMA 3781132064	COMPACT - DUEA - ELITE - EXPRESS - E92
5	**1245090**	0÷16	62 - 62.8 - 1/8	FAEMA 531196010	TEOREMA

MANOMETRI FIAMMA RST
PRESSURE GAUGES FIAMMA RST
MANOMETER FIAMMA RST
MANÓMETROS FIAMMA RST

1

2

3

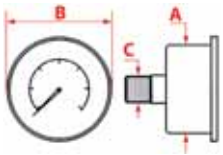

Photo	LF Code	Scale (bar)	Dimensions A - B - C (mm)	Suitable for	For machine model
1	**1245079**	0÷2.5	39 - 44 - 1/8	FIAMMA 5.0.000.0392	ATLANTIC - MARINA - PRESTIGE
2	**1245078**	0÷16	39 - 44 - 1/8	FIAMMA 5.0.000.0391	ATLANTIC - MARINA - PRESTIGE
3	**1245009**	0÷2.5/0÷15	63 - 70 - 1/8	FIAMMA 5.0.000.0390	EUROPA - PRESTIGE - RIA - RIA MAXI

MANOMETRI FIORENZATO CS
PRESSURE GAUGES FIORENZATO CS
MANOMETER FIORENZATO CS
MANÓMETROS FIORENZATO CS

1

2

3

4

5

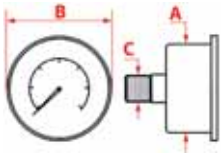

Photo	LF Code	Scale (bar)	Dimensions A - B - C (mm)	Suitable for	For machine model
1	**1245051**	0÷3	41 - 60 - 1/8	FIORENZATO A1400024	BRICOLETTA - COLOMBINA
2	**1245554**	0÷3	52 - 71 - 1/8	FIORENZATO A1400042	PIAZZASANMARCO - VOLANTE
3	**1245553**	0÷16	52 - 71 - 1/8	FIORENZATO A1400043	PIAZZASANMARCO - VOLANTE
4	**1445555**	0÷3/0÷18	60 - 65 - 1/8	FIORENZATO A1400020	DUCALE - MURANO
5	**1445558**	0÷3/0÷18	63 - 70 - 1/8	FIORENZATO A1400019	FENICE - LIDO - VENEZIA

MANOMETRI FRACINO
PRESSURE GAUGES FRACINO
MANOMETER FRACINO
MANÓMETRO FRACINO

1

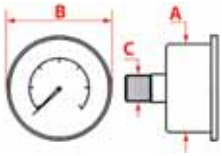

Photo	LF Code	Scale (bar)	Dimensions A - B - C (mm)	Suitable for	For machine model
1	**1245200**	0÷2.5/0÷16	60 - 65 - 1/8	FRACINO FC179M	BAMBINO

MANOMETRI FUTURMAT
PRESSURE GAUGES FUTURMAT
MANOMETER FUTURMAT
MANÓMETROS FUTURMAT

1

2

3

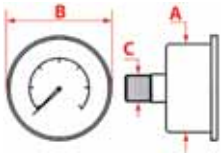

Photo	LF Code	Scale (bar)	Dimensions A - B - C (mm)	Suitable for	For machine model
1	**1245561**	0÷2	52 - 56x79 - 1/4	FUTURMAT	OLD MODELS - MODELLI VECCHI
2	**1245562**	0÷2,5/0÷16	60 - 65 - 1/8	FUTURMAT 08130600	RIMINI
3	**1245801**	0÷2,5/0÷16	63 - 70 - 1/8	FUTURMAT 08339500	F3

MANOMETRI GAGGIA
PRESSURE GAUGES GAGGIA
MANOMETER GAGGIA
MANÓMETROS GAGGIA

1

2

3

4

5

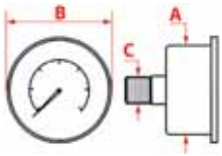

Photo	LF Code	Scale (bar)	Dimensions A - B - C (mm)	Suitable for	For machine model
1	**1245071**	0÷3	39 - 44 - 1/8	GAGGIA DM1600	TD - TE - TN94 - XD - XE
2	**1245069**	0÷15	39 - 44 - 1/8	GAGGIA DM1599	TD - TE - XD - XE
3	**1245056**	0÷3	41 - 44 - 1/8	GAGGIA DM1600/002	FD2000 - FE2000 - TS
4	**1245055**	0÷3	41 - 44 - 1/8	GAGGIA 5024005000	DECO - D90 - E90 - XD - XE
5	**1245061**	0÷15	41 - 44 - 1/8	GAGGIA 5024004000	DECO - XD - XE

MANOMETRI GAGGIA
PRESSURE GAUGES GAGGIA
MANOMETER GAGGIA
MANÓMETROS GAGGIA

1

2

3

4

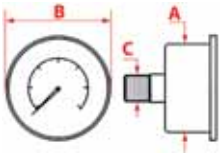

Photo	LF Code	Scale (bar)	Dimensions A - B - C (mm)	Suitable for	For machine model
1	**1245573**	0÷3	49 - 57 - 1/8	GAGGIA	TELL
2	**1245574**	0÷15	49 - 57 - 1/8	GAGGIA	TELL
3	**1245059**	0÷3	49 - 57 - 1/8	GAGGIA DM0800/003	D90 - E90
4	**1245058**	0÷15	49 - 57 - 1/8	GAGGIA DM0801/002	D90 - E90

MANOMETRI GAGGIA
PRESSURE GAUGES GAGGIA
MANOMETER GAGGIA
MANÓMETROS GAGGIA

1

2

3

4

5

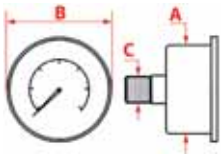

Photo	LF Code	Scale (bar)	Dimensions A - B - C (mm)	Suitable for	For machine model
1	**1245571**	0÷3	52 - 62 - 1/8	GAGGIA	ELE
2	**1245572**	0÷16	52 - 62 - 1/8	GAGGIA	ELE
3	**1245801**	0÷2.5/0÷16	63 - 70 - 1/8	GAGGIA WGA5001018000	GD - GE - LCD
4	**1245575**	0÷3	52 - 56x79 - 1/4	GAGGIA	TELL
5	**1245576**	0÷15	52 - 56x79 - 1/4	GAGGIA	TELL

MANOMETRI GAGGIA SPAGNA
PRESSURE GAUGES GAGGIA SPAGNA
MANOMETER GAGGIA SPAGNA
MANÓMETROS GAGGIA SPAGNA

1

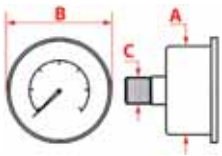

Photo	LF Code	Scale (bar)	Dimensions A - B - C (mm)	Suitable for	For machine model
1	**1245562**	0÷2.5/0÷16	60 - 65 - 1/8	GAGGIA SPAGNA 08130600	BELLA - NERA

MANOMETRI GRIMAC
PRESSURE GAUGES GRIMAC
MANOMETER GRIMAC
MANÓMETROS GRIMAC

1

2

3

4

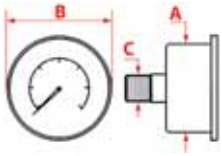

Photo	LF Code	Scale (bar)	Dimensions A - B - C (mm)	Suitable for	For machine model
1	**1245044**	0÷2.5	41 - 44 - 1/8	GRIMAC 1250200057-MG157/1	MIA - NEWCIALDAVAPOR - VAPORDOUBLE
2	**1245200**	0÷2.5/0÷16	60 - 65 - 1/8	GRIMAC 1250200034-GRC106	ECLISSE - TEN - TWENTY
3	**1245201**	0÷2.5/0÷15	63 - 70 - 1/8	GRIMAC 1250200033-GR034S	G10 - G11
4	**1245411**	0÷2.5/0÷16	63 - 70 - 1/8	GRIMAC 1250200031-GR034	ZOLAI - ZOLAII

MANOMETRI ISOMAC
PRESSURE GAUGES ISOMAC
MANOMETER ISOMAC
MANÓMETROS ISOMAC

1

2

3

4

5

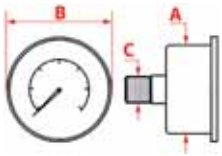

Photo	LF Code	Scale (bar)	Dimensions A - B - C (mm)	Suitable for	For machine model
1	**1245085**	0÷16	39 - 44 - 1/8	ISOMAC IS000714	MAVERICK
2	**1245002**	0÷2.5	41 - 50 - 1/8	ISOMAC IS000134	MILLENNIUM - TEA
3	**1245001**	0÷16	41 - 50 - 1/8	ISOMAC IS000318	TEA - ZAFFIRO
4	**1245087**	0÷16	41 - 50 - 1/8	ISOMAC IS000756	GIADA - VENUS
5	**1245086**	0÷3/0÷15	60 - 65 - 1/8	ISOMAC IS000661	MONDIALE

MANOMETRI ITALCREM
PRESSURE GAUGES ITALCREM
MANOMETER ITALCREM
MANÓMETROS ITALCREM

1

2

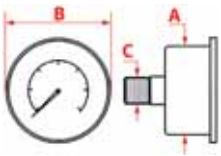

Photo	LF Code	Scale (bar)	Dimensions A - B - C (mm)	Suitable for	For machine model
1	**1245024**	0÷3	51 - 57 - 1/4	ITALCREM	101
2	**1245562**	0÷2.5/0÷16	60 - 65 - 1/8	ITALCREM 08130600	CAPRI

MANOMETRI LAVAZZA
PRESSURE GAUGES LAVAZZA
MANOMETER LAVAZZA
MANÓMETROS LAVAZZA

1

2

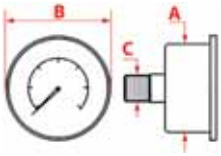

Photo	LF Code	Scale (bar)	Dimensions A - B - C (mm)	Suitable for	For machine model
1	**1245023**	0÷2,5	40 - 44 - 1/8	LAVAZZA 10066482	LB2800
2	**1245801**	0÷2,5/0÷16	63 - 70 - 1/8	LAVAZZA 10061929	LB4800

MANOMETRI MAIRALI
PRESSURE GAUGES MAIRALI
MANOMETER MAIRALI
MANÓMETROS MAIRALI

1

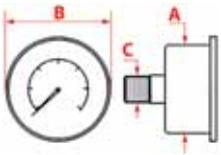

Photo	LF Code	Scale (bar)	Dimensions A - B - C (mm)	Suitable for	For machine model
1	**1245562**	0÷2.5/0÷16	60 - 65 - 1/8	MAIRALI 08130600	ARIANNE - GIULIETTA

MANOMETRI MARCFI-ANCAS
PRESSURE GAUGES MARCFI-ANCAS
MANOMETER MARCFI-ANCAS
MANÓMETROS MARCFI-ANCAS

1

2

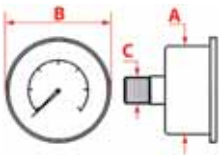

Photo	LF Code	Scale (bar)	Dimensions A - B - C (mm)	Suitable for	For machine model
1	**1245575**	0÷3	52 - 56x79 - 1/4	MARCFI-ANCAS	OLD MODELS - MODELLI VECCHI
2	**1245576**	0÷15	52 - 56x79 - 1/4	MARCFI-ANCAS	OLD MODELS - MODELLI VECCHI

MANOMETRI MARZOCCO
PRESSURE GAUGES MARZOCCO
MANOMETER MARZOCCO
MANÓMETROS MARZOCCO

1

2

3

4

5

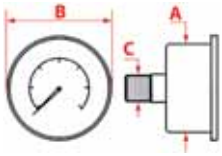

Photo	LF Code	Scale (bar)	Dimensions A - B - C (mm)	Suitable for	For machine model
1	**1245034**	0÷3	41 - 44 - 1/8	MARZOCCO E.3.002	FB/80 - GB/5
2	**1245035**	0÷16	41 - 44 - 1/4	MARZOCCO E.3.001	FB/80 - GB/5
3	**1245093**	0÷3	41 - 44 - 1/8	MARZOCCO E.3.002.01	GS3 - FB/80 - GB/5
4	**1245092**	0÷18	41 - 44 - 1/8	MARZOCCO E.3.001.02	GS3 - FB/80 - GB/5
5	**1445555**	0÷3/0÷18	60 - 65 - 1/8	MARZOCCO L280	LINEA - FB70

MANOMETRI MCE
PRESSURE GAUGES MCE
MANOMETER MCE
MANÓMETROS MCE

1

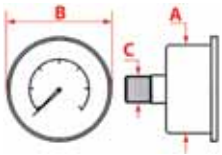

Photo	LF Code	Scale (bar)	Dimensions A - B - C (mm)	Suitable for	For machine model
1	**1245032**	0÷3/0÷15	63 - 70 - 1/8	MCE 21112	START

MANOMETRI NUOVA SIMONELLI
PRESSURE GAUGES NUOVA SIMONELLI
MANOMETER NUOVA SIMONELLI
MANÓMETROS NUOVA SIMONELLI

1

2

3

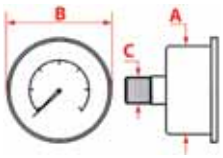

Photo	LF Code	Scale (bar)	Dimensions A - B - C (mm)	Suitable for	For machine model
1	**1245503**	0÷2.5/0÷15	60 - 65 - 1/8	NUOVA SIMONELLI 09100003	APPIA - AURELIA - MACCUP - OPTIMA - PREMIER - PROGRAM
2	**1245502**	0÷2.5/0÷16	60 - 65 - 1/8	NUOVA SIMONELLI	APPIA - AURELIA - MACCUP - OPTIMA - PREMIER - PROGRAM
3	**1245504**	0÷2.5/0÷16	60 - 65 - 1/8	NUOVA SIMONELLI	APPIA - AURELIA - MACCUP - OPTIMA - PREMIER - PROGRAM

MANOMETRI ORCHESTRALE
PRESSURE GAUGES ORCHESTRALE
MANOMETER ORCHESTRALE
MANÓMETROS ORCHESTRALE

1

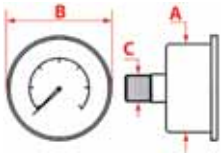

Photo	LF Code	Scale (bar)	Dimensions A - B - C (mm)	Suitable for	For machine model
1	**1245068**	0÷25	61 - 68 - 1/8	ORCHESTRALE D2113001	ETNICA - PHONICA

MANOMETRI PAVONI
PRESSURE GAUGES PAVONI
MANOMETER PAVONI
MANÓMETROS PAVONI

1

2

3

4

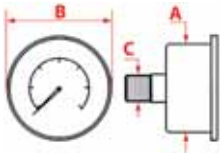

Photo	LF Code	Scale (bar)	Dimensions A - B - C (mm)	Suitable for	For machine model
1	**1245015**	0-2.5	41 - 41 - 1/8	PAVONI 453040	PROFESSIONAL - ROMANTICA - STRADIVARI
2	**1245591**	0÷3	60 - 65 - 1/8	PAVONI 453004	BART
3	**1245801**	0÷2.5/0÷16	63 - 70 - 1/8	PAVONI 453015	BAR
4	**1245802**	0÷2.5/0÷15	63 - 70 - 1/8	PAVONI 453007	BAR

MANOMETRI PROMAC
PRESSURE GAUGES PROMAC
MANOMETER PROMAC
MANÓMETROS PROMAC

1

2

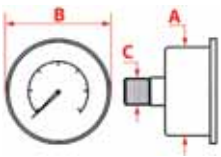

Photo	LF Code	Scale (bar)	Dimensions A - B - C (mm)	Suitable for	For machine model
1	**1245100**	0÷2.5	41 - 44 - 1/8	PROMAC 35002506	CLUB
2	**1245013**	0÷2,5/0÷16	63 - 70 - 1/8	PROMAC 35162505	GREEN - COMPACT

MANOMETRI PROVAPRESSIONE
PRESSURE GAUGES
MANOMETER DRUCKPRÜFUNG
MANÓMETROS PRUEBA PRESIÓN

1

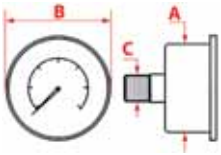

Photo	LF Code	Scale (bar)	Dimensions A - B - C (mm)	Suitable for	For machine model
1	**1245401**	0÷16	3/8	---	---

MANOMETRI QUICK MILL
PRESSURE GAUGES QUICK MILL
MANOMETER QUICK MILL
MANÓMETROS QUICK MILL

1

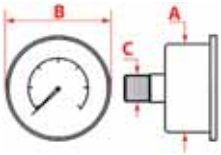

Photo	LF Code	Scale (bar)	Dimensions A - B - C (mm)	Suitable for	For machine model
1	**1245084**	0÷16	40 - 43 - 1/8	QUICK MILL MAN03035	---

MANOMETRI RANCILIO
PRESSURE GAUGES RANCILIO
MANOMETER RANCILIO
MANÓMETROS RANCILIO

1

2

3

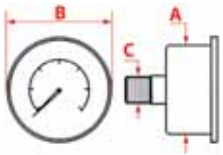

Photo	LF Code	Scale (bar)	Dimensions A - B - C (mm)	Suitable for	For machine model
1	**1245023**	0÷2.5	40 - 44 - 1/8	RANCILIO	CLASSE10 - CLASSE9 - CLASSE8 - CLASSE7 - CLASSE6 - EPOCA
2	**1245014**	0÷2.5	40 - 44 - 1/8	RANCILIO 35002508	CLASSE10 - CLASSE9 - CLASSE8 - CLASSE7 - CLASSE6 - EPOCA
3	**1245012**	0÷16	40 - 44 - 1/8	RANCILIO 35002509	CLASSE10 - CLASSE9 - CLASSE8 - CLASSE7 - CLASSE6 - EPOCA

MANOMETRI RANCILIO
PRESSURE GAUGES RANCILIO
MANOMETER RANCILIO
MANÓMETROS RANCILIO

1

2

3

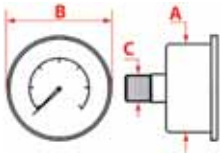

Photo	LF Code	Scale (bar)	Dimensions A - B - C (mm)	Suitable for	For machine model
1	**1245900**	0÷2.5	52 - 57 - 1/4	RANCILIO 35002504	S20
2	**1245013**	0÷2.5/0÷16	63 - 70 - 1/8	RANCILIO 35162505	MILLENNIUNM - S20
3	**1245651**	0÷2.5/0÷16	63 - 70 - 1/8	RANCILIO 35062501	Z11

MANOMETRI RENEKA
PRESSURE GAUGES RENEKA
MANOMETER RENEKA
MANÓMETROS RENEKA

1

2

3

4

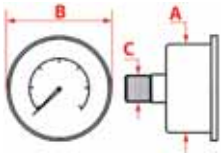

Photo	LF Code	Scale (bar)	Dimensions A - B - C (mm)	Suitable for	For machine model
1	**1245206**	0÷3	49 - 49 - 1/8	RENEKA 9004700	BASIC - SINGLE - XL - VIVA
2	**1245207**	0÷16	49 - 49 - 1/8	RENEKA 9004701	BASIC - VIVA
3	**1242008**	0÷2.5/0÷15	63 - 70 - 1/8	RENEKA 9004720	LC - MOSAIC - VIVAE - VIVAS
4	**1245661**	0÷3/0÷15	63 - 70 - 1/8	RENEKA 9004720	LC - MOSAIC - VIVAE - VIVAS

MANOMETRI ROYAL
PRESSURE GAUGES ROYAL
MANOMETER ROYAL
MANÓMETROS ROYAL

1

2

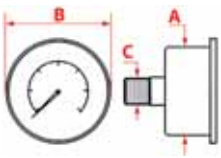

Photo	LF Code	Scale (bar)	Dimensions A - B - C (mm)	Suitable for	For machine model
1	**1245043**	0÷2.5/0÷15	63 - 70 - 1/8	ROYAL 4551014	DIADEMA
2	**1245050**	0÷3.0/0÷15	63 - 70 - 1/8	ROYAL 4551017	---

MANOMETRI SAB ITALIA
PRESSURE GAUGES SAB ITALIA
MANOMETER SAB ITALIA
MANÓMETROS SAB ITALIA

1

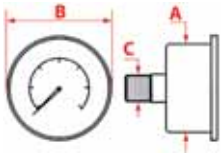

Photo	LF Code	Scale (bar)	Dimensions A - B - C (mm)	Suitable for	For machine model
1	**1245043**	0÷2.5/0÷15	63 - 70 - 1/8	SAB SVTMM019	ELLIPSE - E96 - JOLLY - MODERNA

MANOMETRI SAECO
PRESSURE GAUGES SAECO
MANOMETER SAECO
MANÓMETROS SAECO

1

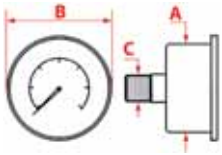

Photo	LF Code	Scale (bar)	Dimensions A - B - C (mm)	Suitable for	For machine model
1	**1245801**	0÷2.5/0÷16	63 - 70 - 1/8	SAECO WGA5001018000	AROMA

MANOMETRI SAN MARCO
PRESSURE GAUGES SAN MARCO
MANOMETER SAN MARCO
MANÓMETROS SAN MARCO

1

2

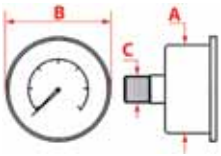

Photo	LF Code	Scale (bar)	Dimensions A - B - C (mm)	Suitable for	For machine model
1	**1245081**	0÷2.5	47 - 40 - 1/8	SAN MARCO 202404	85 FLEXA
2	**1245661**	0÷3/0÷15	63 - 70 - 1/8	SAN MARCO 202102	85 - 95 - LEVA

MANOMETRI SANREMO
PRESSURE GAUGES SANREMO
MANOMETER SANREMO
MANÓMETROS SANREMO

1

2

3

4

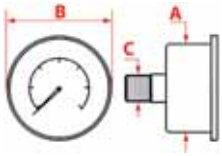

Photo	LF Code	Scale (bar)	Dimensions A - B - C (mm)	Suitable for	For machine model
1	**1245076**	0÷2.5	41 - 44 - 1/8	SANREMO 10552040	TORINO
2	**1245077**	0÷16	41 - 44 - 1/8	SANREMO 10552042	TORINO
3	**5033187**	0÷3/0÷15	60 - 80 - 1/8	SANREMO 10552021A	AMALFI - CAPRI
4	**5056570**	0÷3/0÷15	60 - 85 - 1/8	SANREMO 10552023A	MILANO LX - VENEZIA

MANOMETRI SCALA
PRESSURE GAUGES SCALA
MANOMETER SCALA
MANÓMETROS SCALA

1

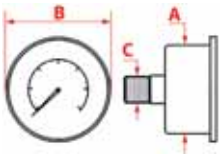

Photo	LF Code	Scale (bar)	Dimensions A - B - C (mm)	Suitable for	For machine model
1	**5053882**	0÷2.5/0÷16	63 - 70 - 1/8	SCALA C-0150	CARMEN

MANOMETRI SPAZIALE
PRESSURE GAUGES SPAZIALE
MANOMETER SPAZIALA
MANÓMETROS SPAZIALE

1

2

3

4

5

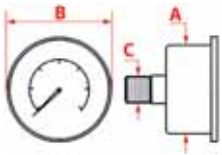

Photo	LF Code	Scale (bar)	Dimensions A - B - C (mm)	Suitable for	For machine model
1	**1245651**	0÷2.5/0÷16	63 - 70 - 1/8	SPAZIALE 08469	S5 - S5COMPACT
2	**1245027**	0÷2.5	42 - 43 - 1/8	SPAZIALE 06237	S3
3	**1245026**	0÷16	42 - 43 - 1/8	SPAZIALE 06238	S3
4	**5033796**	0÷2.5	42 - 54 - 1/8	SPAZIALE 06737	S1VIVALDI - S3SELETRON
5	**5033794**	0÷16	42 - 54 - 1/8	SPAZIALE 06738	S3SELETRON

MANOMETRI SPAZIALE
PRESSURE GAUGES SPAZIALE
MANOMETER SPAZIALE
MANÓMETROS SPAZIALE

1

2

3

4

5

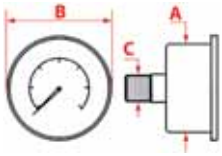

Photo	LF Code	Scale (bar)	Dimensions A - B - C (mm)	Suitable for	For machine model
1	**5072208**	0÷3.0	43 - 48 - 1/8	SPAZIALE 11079	S1 DREAM - S8 - S9
2	**1245089**	0÷16	43 - 48 - 1/8	SPAZIALE 11080	S8 - S9
3	**5070353**	0÷2.5/0÷16	58 - 70 - 1/8	SPAZIALE 10712	S2
4	**1245028**	0÷2.5	58 - 70 - 1/4	SPAZIALE 02047	NEW - RAPID - SELETRON PLUS - SUPER3000
5	**1245029**	0÷2.5/0÷15	63 - 70 - 1/8	SPAZIALE 05044	NEW - RAPID - SUPER3000 - SPAZIO

MANOMETRI VFA
PRESSURE GAUGES VFA
MANOMETER VFA
MANÓMETROS VFA

1

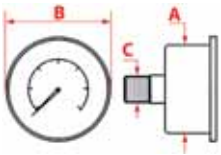

Photo	LF Code	Scale (bar)	Dimensions A - B - C (mm)	Suitable for	For machine model
1	**1245200**	0÷2.5/0÷16	60 - 65 - 1/8	VFA 214225-A	ELITE - MAGESTIC - PRONTA

MANOMETRI VIBIEMME
PRESSURE GAUGES VIBIEMME
MANOMETER VIBIEMME
MANÓMETROS VIBIEMME

1

2

3

4

5

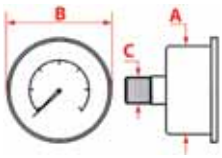

Photo	LF Code	Scale (bar)	Dimensions A - B - C (mm)	Suitable for	For machine model
1	**1245073**	0÷4	40 - 47 - 1/8	VIBIEMME MANMDOE40025	DOMOBARJUNIOR - DOMOBARSUPER - LOLLO
2	**1245072**	0÷16	40 - 47 - 1/8	VIBIEMME MANMDOE40016	DOMOBARJUNIOR - DOMOBARSUPER - LOLLO
3	**1245002**	0÷2.5	41 - 50 - 1/8	VIBIEMME MANMSEM	DOMOBARSUPER
4	**1245001**	0÷16	41 - 50 - 1/8	VIBIEMME MANMSEM16	DOMOBARSUPER
5	**1245074**	0÷16	41 - 44 - 1/8	VIBIEMME MANMSEM42016	DOMOBAR

MANOMETRI VIBIEMME
PRESSURE GAUGES VIBIEMME
MANOMETER VIBIEMME
MANÓMETROS VIBIEMME

1

2

3

4

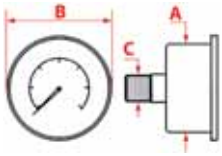

Photo	LF Code	Scale (bar)	Dimensions A - B - C (mm)	Suitable for	For machine model
1	**1245066**	0÷2.5	49 - 57 - 1/8	VIBIEMME MANM49025GHIR	CHIMAERA - EVOLUTION - LOLLO - REPLICA - REVOLUTION
2	**1245067**	0÷16	49 - 57 - 1/8	VIBIEMME MANM49016GHIR	CHIMAERA - EVOLUTION - LOLLO - REPLICA - REVOLUTION
3	**1245016**	0÷2.5/0÷15	60 - 65 - 1/8	VIBIEMME MANMDOTNVBM	MERCURY - MINIMAX
4	**1245017**	0÷2.5/0÷16	63 - 70 - 1/8	VIBIEMME MANMKO	EVOLUTION - REVOLUTION

MANOMETRI VICTORIA ARDUINO
PRESSURE GAUGES VICTORIA ARDUINO
MANOMETER VICTORIA ARDUINO
MANÓMETROS VICTORIA ARDUINO

1

2

3

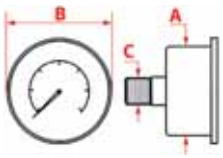

Photo	LF Code	Scale (bar)	Dimensions A - B - C (mm)	Suitable for	For machine model
1	**1245046**	0÷2.5	62 - 66 - 1/4	VICTORIA ARDUINO 09100008	VENUSCENTURY
2	**1245045**	0÷2.5/0÷16	63 - 70 - 1/8	VICTORIA ARDUINO 40900001	ADONIS - ATHENALEVA - ATHENAS - VENUSBAR
3	**5085425**	0÷16	60 - 65 - 1/8	VICTORIA ARDUINO 09100011	VA388 BLACK EAGLE

MANOMETRI VISACREM
PRESSURE GAUGES VISACREM
MANOMETER VISACREM
MANÓMETROS VISACREM

1

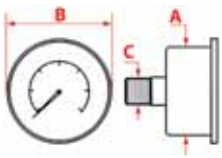

Photo	LF Code	Scale (bar)	Dimensions A - B - C (mm)	Suitable for	For machine model
1	**1245562**	0÷2.5/0÷16	60 - 65 - 1/8	VISACREM 08130600	BRAVA - NERA

MANOMETRI WEGA
PRESSURE GAUGES WEGA
MANOMETER WEGA
MANÓMETROS WEGA

1

2

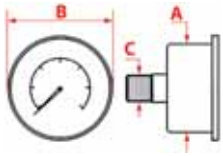

Photo	LF Code	Scale (bar)	Dimensions A - B - C (mm)	Suitable for	For machine model
1	**1245100**	0÷2.5	41 - 44 - 1/8	WEGA WY21105	AIRY - ANTARES - ATLAS - MININOVA - NOVA - NOVECENTO
2	**1245507**	0÷3	52 - 57 - 1/4	WEGA WY21101	NOVA - NOVA ALE - JUNIOR

MANOMETRI WEGA
PRESSURE GAUGES WEGA
MANOMETER WEGA
MANÓMETROS WEGA

1

2

3

4

5

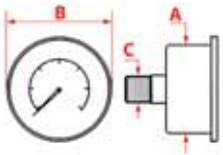

Photo	LF Code	Scale (bar)	Dimensions A - B - C (mm)	Suitable for	For machine model
1	**1245504**	0÷2.5/0÷16	60 - 65 - 1/8	WEGA WY21107	AIRY - ANTARES - ATLAS - COMBINOVA - POLARIS
2	**1245502**	0÷2.5/0÷16	60 - 65 - 1/8	WEGA	AIRY - ANTARES - ATLAS - COMBINOVA - POLARIS
3	**1245503**	0÷2.5/0÷15	60 - 65 - 1/8	WEGA	AIRY - ANTARES - ATLAS - COMBINOVA - POLARIS
4	**1245032**	0÷3.0/0÷15	63 - 70 - 1/8	WEGA WY21112	ATLAS - ATLASCOMPATTA - COLOSSEUM - ESPRESSA - POLARIS
5	**1245411**	0÷2.5/0÷16	63 - 70 - 1/8	WEGA WY21109	EURO2000

Always connected... anytime, anywhere

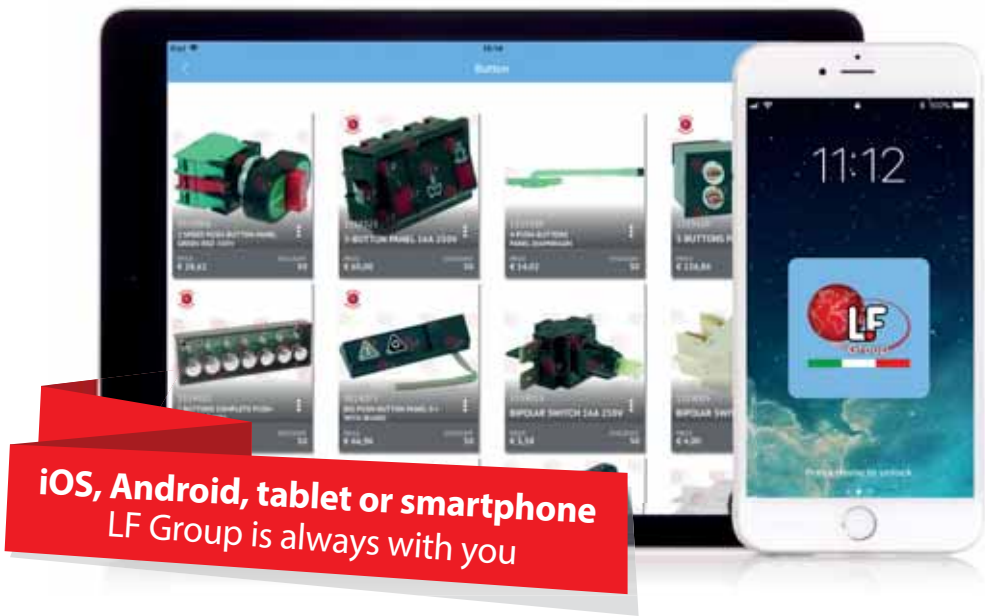

New App
LF Group

Download on the App Store
GET IT ON Google Play

MANOPOLE ASTORIA/CMA
KNOBS ASTORIA/CMA
DREHKNÖPFE ASTORIA/CMA
MANDOS ASTORIA/CMA

1 2 3 4 5 6

Photo	LF Code	Notes	Suitable for	For machine model
1	**1241466**	STEAM - VAPORE	ASTORIA/CMA 15275	CALYPSO - DENISE - GIADA - LISA - PRATIC NEW - VANIA
2	**1241467**	WATER - ACQUA	ASTORIA/CMA 15276	DENISE - LISA - PRATIC NEW - VANIA
3	**1241451**	STEAM - VAPORE	ASTORIA/CMA 15254	DORA - PRATIC
4	**1241453**	WATER - ACQUA	ASTORIA/CMA 15253	DORA - PRATIC
5	**1241201**	STEAM - VAPORE	ASTORIA/CMA 15251	ARGENTA - CK - CKE - CKX - CKXE - DIVINA - DORA - GLORIA
6	**5047209**	WATER - ACQUA	ASTORIA/CMA 15250	ARGENTA - DIVINA - DORA - GLORIA - PERLA4D - RAPALLO

MANOPOLE ASTORIA/CMA
KNOBS ASTORIA/CMA
DREHKNÖPFE ASTORIA/CMA
MANDOS ASTORIA/CMA

1 2 3 4 5 6

Photo	LF Code	Notes	Suitable for	For machine model
1	**1241452**	STEAM - VAPORE	ASTORIA/CMA 15265	ARGENTA - DIVINA
2	**1241468**	WATER - ACQUA	ASTORIA/CMA 15264	ARGENTA - DIVINA
3	**1241202**	STEAM - VAPORE	ASTORIA/CMA 15277997	TANYA
4	**1241203**	WATER - ACQUA	ASTORIA/CMA 15277998	TANYA
5	**1241094**	STEAM/WATER - VAPORE/ACQUA	ASTORIA/CMA 15029050	GLORIA - PERLA 4D - PLUS4YOU
6	**1241095**	STEAM/WATER - VAPORE/ACQUA	ASTORIA/CMA 15029051	GLORIA - GLORIA R12 - PERLA 4D - PLUS4YOU - SIBILLA

MANOPOLE ASTORIA/CMA
KNOBS ASTORIA/CMA
DREHKNÖPFE ASTORIA/CMA
MANDOS ASTORIA/CMA

1 2 3

Photo	LF Code	Notes	Suitable for	For machine model
1	**1241010**	FOR SELECTOR SWITCH - PER COMMUTATORE	ASTORIA/CMA 15271	ARGENTA - BRAVA - CALYPSO - DENISE - DIVINA - DORA
2	**1241463**	FOR SELECTOR SWITCH - PER COMMUTATORE	ASTORIA/CMA 15277999	BRAVA
3	**1241401**	FOR INLET TAPS - PER RUBINETTI CARICO	ASTORIA/CMA 15400	ARGENTA - BRAVA - CALYPSO - DIVINA - DORA - GLORIA

MANOPOLE BEZZERA
KNOBS BEZZERA
DREHKNÖPFE BEZZERA
MANDOS BEZZERA

1 2 3 4 5 6

Photo	LF Code	Notes	Suitable for	For machine model
1	**1241401**	FOR BREW GROUPS - PER GRUPPI EROGAZIONE	BEZZERA 7371511.01	BZ07 - BZ07 NEW - BZ09 - BZ10 - BZ13 - GALATEA - GIULIA - UNICA
2	**1241365**	FOR TAP KNURLED - PER RUBINETTO MILLERIGHE	BEZZERA 5973022	ELLISSE
3	**1241364**	FOR TAP KNURLED - PER RUBINETTO MILLERIGHE	BEZZERA 5973021	ELLISSE
4	**1241353**	FOR TAP KNURLED - PER RUBINETTO MILLERIGHE	BEZZERA 5973023	ELLISSE
5	**1241355**	FOR TAP KNURLED - PER RUBINETTO MILLERIGHE	BEZZERA 5973024	ELLISSE
6	**1241375**	FOR SELECTOR SWITCH - PER COMMUTATORE	BEZZERA 5973025	EBBIS AL

MANOPOLE BEZZERA
KNOBS BEZZERA
DREHKNÖPFE BEZZERA
MANDOS BEZZERA

1 2 3 4 5 6

Photo	LF Code	Notes	Suitable for	For machine model
1	**1241351**	STEAM - VAPORE	BEZZERA 5973005	B3000 - VERTICALE
2	**1241352**	WATER - ACQUA	BEZZERA 5973006	B3000 - VERTICALE
3	**5028645**	STEAM/WATER - VAPORE/ACQUA	BEZZERA 5371803	B2000 - B2000 AL - B2006 - B2006 AL - B2009 COMPACT
4	**5501072**	STEAM - VAPORE	BEZZERA 5373905	B2000 - B2000 AL - B2006 - B2006 AL - B2009 COMPACT
5	**5501073**	WATER - ACQUA	BEZZERA 5373906	B2000 - B2000 AL - B2006 - B2006 AL - B2013 - B3000
6	**1241196**	STEAM/WATER - VAPORE/ACQUA	BEZZERA 7371509	GALATEA - GALATEA DOMUS - VERTICALE

MANOPOLE BFC
KNOBS BFC
DREHKNÖPFE BFC
MANDOS BFC

1 2 3 4 5 6

Photo	LF Code	Notes	Suitable for	For machine model
1	**1241217**	STEAM/WATER - VAPORE/ACQUA	BFC 4001006	GALILEO - IMOLA - JUNIOR ELITE - LIRA - MARANELLO - MONZA
2	**1241057**	STEAM - VAPORE	BFC 4001023	GALILEO - IMOLA - JUNIOR ELITE - LIRA - MARANELLO - MONZA
3	**1241321**	STEAM/WATER - VAPORE/ACQUA	BFC 4001010	CLASSICA - DELUX - GRANDOGE - IMOLA - JUNIOR - VITTORIA
4	**1241322**	STEAM - VAPORE	BFC 4001020	CLASSICA - DELUX - GRANDOGE - IMOLA - JUNIOR - VITTORIA
5	**1241045**	WATER - ACQUA	BFC 4001025	CLASSICA - DELUX - GRANDOGE - IMOLA - LA VITTORIA - LIRA
6	**1241401**	FOR BREW GROUPS - PER GRUPPI EROGAZIONE	BFC 4001005	CLASSICA - DELUX - GALILEO - LA VITTORIA - LIRA

MANOPOLE BIALETTI
KNOBS BIALETTI
DREHKNÖPFE BIALETTI
MANDOS BIALETTI

1

Photo	LF Code	Notes	Suitable for	For machine model
1	**1241221**	STEAM/WATER - VAPORE/ACQUA	BIALETTI 912750640	MOKONA CF40

MANOPOLE BIANCHI
KNOBS BIANCHI
DREHKNÖPFE BIANCHI
MANDOS BIANCHI

1

2

3

Photo	LF Code	Notes	Suitable for	For machine model
1	**1241321**	STEAM/WATER - VAPORE/ACQUA	BIANCHI 05276615	SARA - SOFIA
2	**1241057**	STEAM - VAPORE	BIANCHI 05276525	SARA - SOFIA
3	**1241058**	WATER - ACQUA	BIANCHI 05276515	SARA

MANOPOLE BRASILIA
KNOBS BRASILIA
DREHKNÖPFE BRASILIA
MANDOS BRASILIA

1

2

3

4

Photo	LF Code	Notes	Suitable for	For machine model
1	**1241003**	STEAM/WATER - VAPORE/ACQUA	BRASILIA 16883.0.00.02	CADETTA - MINICLASSIC - ROMA
2	**1241322**	STEAM - VAPORE	BRASILIA 16884.0.00.02	CADETTA - MINICLASSIC - ROMA
3	**1241045**	WATER - ACQUA	BRASILIA 16885.0.00.02	CADETTA - MINICLASSIC - ROMA
4	**1241542**	FOR SELECTOR SWITCH - PER COMMUTATORE	BRASILIA	---

MANOPOLE BRUGNETTI/AURORA
KNOBS BRUGNETTI/AURORA
DREHKNÖPFE BRUGNETTI/AURORA
MANDOS BRUGNETTI/AURORA

1

Photo	LF Code	Notes	Suitable for	For machine model
1	**1241386**	STEAM/WATER - VAPORE/ACQUA	BRUGNETTI 000222	C

MANOPOLE CARIMALI
KNOBS CARIMALI
DREHKNÖPFE CARIMALI
MANDOS CARIMALI

1

2

3

4

5

6

Photo	LF Code	Notes	Suitable for	For machine model
1	**1241436**	STEAM/WATER - VAPORE/ACQUA	CARIMALI 37.00074	ECO - UNO
2	**5052863**	STEAM/WATER - VAPORE/ACQUA	CARIMALI 37.00694	CENTO50 - ETA BETA - E9 ESPRESSO - KIKKO - TEMA STYLE
3	**1241184**	STEAM/WATER - VAPORE/ACQUA	CARIMALI 95.01888	PRATICA
4	**1241207**	STEAM/WATER - VAPORE/ACQUA	CARIMALI 95.01884	PRATICA
5	**1241186**	STEAM - VAPORE	CARIMALI 95.01883	PRATICA
6	**1241185**	WATER - ACQUA	CARIMALI 95.01882	PRATICA

MANOPOLE CASADIO
KNOBS CASADIO
HANDGRIFF CASADIO
MANDOS CASADIO

1

2

3

4

Photo	LF Code	Notes	Suitable for	For machine model
1	**1241220**	STEAM/WATER - VAPORE/ACQUA	CASADIO 973700000	QUINDICI - UNDICI
2	**1241167**	STEAM/WATER - VAPORE/ACQUA	CASADIO 958743000	DIECIA - DIECIS - DODICIA - DODICIS - VENTI
3	**1241561**	---	CASADIO 485154000	DIECIA - DIECIS - DODICIA - DODICIS - VENTI
4	**1241033**	FOR SELECTOR SWITCH - PER COMMUTATORE	CASADIO 3529133899	DODICIA - DODICIS

MANOPOLE CIMBALI
KNOBS CIMBALI
HANDGRIFF CIMBALI
MANDOS CIMBALI

1 2 3 4 5 6

Photo	LF Code	Notes	Suitable for	For machine model
1	**1241559**	STEAM/WATER - VAPORE/ACQUA	CIMBALI	M15
2	**1241558**	STEAM/WATER - VAPORE/ACQUA	CIMBALI	M20
3	**1241555**	FOR SELECTOR SWITCH - PER COMMUTATORE	CIMBALI 421-919-002	M20
4	**1241011**	FOR SELECTOR SWITCH - PER COMMUTATORE	CIMBALI 472-875-000	M21 - M30 - M30BISTRO
5	**1241013**	FOR SELECTOR SWITCH - PER COMMUTATORE	CIMBALI 496-788-000	M21 - M30 - M30BISTRO
6	**5019667**	FOR SELECTOR SWITCH - PER COMMUTATORE	CIMBALI 492-903-010	M22 - M29

MANOPOLE CIMBALI
KNOBS CIMBALI
HANDGRIFF CIMBALI
MANDOS CIMBALI

1 2 3 4 5 6

Photo	LF Code	Notes	Suitable for	For machine model
1	**1241561**	---	CIMBALI 485-154-000	M24 - M39 - M39GT
2	**1241171**	STEAM - VAPORE	CIMBALI 913-729-020	M24 - M39 - M39GT
3	**1241556**	FOR SELECTOR SWITCH - PER COMMUTATORE	CIMBALI 421-920-002	M27
4	**1241554**	STEAM/WATER - VAPORE/ACQUA	CIMBALI 495-764-000	M27 2008
5	**1241033**	FOR SELECTOR SWITCH - PER COMMUTATORE	CIMBALI 3529-133-899	M27 2008
6	**1241015**	STEAM/WATER - VAPORE/ACQUA	CIMBALI 472-869-000	M30

MANOPOLE CIMBALI
KNOBS CIMBALI
HANDGRIFF CIMBALI
MANDOS CIMBALI

1 2 3 4 5 6

Photo	LF Code	Notes	Suitable for	For machine model
1	**1241557**	---	CIMBALI 544-400-230	M32 - M39 - M39GT
2	**1241311**	STEAM/WATER - VAPORE/ACQUA	CIMBALI 445-704-000	M31 - M32
3	**1241012**	FOR SELECTOR SWITCH - PER COMMUTATORE	CIMBALI 445-700-000	M31 - M32
4	**1241014**	FOR SELECTOR SWITCH - PER COMMUTATORE	CIMBALI 445-703-000	M31 - M32
5	**1225011**	FOR INLET TAPS - PER RUBINETTI CARICO	CIMBALI 4831-117-704	M39 - M39GT
6	**1241213**	STEAM - VAPORE	CIMBALI 947-506-000	M100

MANOPOLE CONTI
KNOBS CONTI
DREHKNÖPFE CONTI
MANDOS CONTI

1

2

3

Photo	LF Code	Notes	Suitable for	For machine model
1	**1241367**	STEAM/WATER - VAPORE/ACQUA	CONTI 4081561	CLUB
2	**1241561**	---	CONTI	CLUB
3	**1225407**	STEAM/WATER - VAPORE/ACQUA	CONTI 410099	XEOS2

MANOPOLE DELONGHI
KNOBS DELONGHI
DREHKNÖPFE DELONGHI
MANDOS DELONGHI

1

2

3

4

Photo	LF Code	Notes	Suitable for	For machine model
1	**5077556**	---	DELONGHI 5513222541	ESAM02.110.SB - ESAM03.110.S EX:1 - ESAM03.120.S EX:1
2	**5062848**	---	DELONGHI 5513222461	ESAM04.110 - ESAM04.120 - ESAM04.320
3	**5064193**	---	DELONGHI 5513222431	ECAM23.120 - ECAM23.123 - ECAM23.210 - ECAM23.420 - ECAM24.210
4	**5067829**	---	DELONGHI 5513222471	ESAM2000 - ESAM2600 - ESAM2800

MANOPOLE DELONGHI
KNOBS DELONGHI
DREHKNÖPFE DELONGHI
MANDOS DELONGHI

1

2

3

Photo	LF Code	Notes	Suitable for	For machine model
1	**5059575**	---	DELONGHI 5513222451	EAM3000 - EAM3200 - EAM3400 - ESAM3000 - ESAM3100 - ESAM3200
2	**5064036**	---	DELONGHI 5513222511	EAM4000 - EAM4200 - EAM4300 - ESAM4000 - ESAM4200 - ESAM4300
3	**1241181**	---	DELONGHI 5532109600	EC155

MANOPOLE DIDIESSE
KNOBS DIDIESSE
HANDGRIFF DIDIESSE
MANDOS DIDIESSE

1

Photo	LF Code	Notes	Suitable for	For machine model
1	**1241190**	---	DIDIESSE FR017	FROG

MANOPOLE ECM
KNOBS ECM
KNÖPFE ECM
MANDOS ECM

1

Photo	LF Code	Notes	Suitable for	For machine model
1	**1241401**	FOR BREW GROUPS - PER GRUPPI EROGAZIONE	ECM C439900840	GIOTTO - VENEZIANO

MANOPOLE ECM MANUFACTURE
KNOBS ECM MANUFACTURE
KNÖPFE ECM MANUFACTURE
MANDOS ECM MANUFACTURE

1

2

Photo	LF Code	Notes	Suitable for	For machine model
1	**1241196**	STEAM/WATER - VAPORE/ACQUA	ECM MANUFACTURE B7371509	CLASSIKA II - MECHANIKA - TECHNIKA III
2	**1241401**	FOR BREW GROUPS - PER GRUPPI EROGAZIONE	ECM MANUFACTURE C439900840	CLASSIKA II - ELEKTRONIKA II PROFI - MECHANIKA

MANOPOLE ELEKTRA
KNOBS ELEKTRA
DREHKNÖPFE ELEKTRA
MANDOS ELEKTRA

1

2

3

4

5

6

Photo	LF Code	Notes	Suitable for	For machine model
1	**1241135**	STEAM/WATER - VAPORE/ACQUA	ELEKTRA 01898035	BELLE EPOQUE - CLASSIC BARLUME
2	**1241020**	STEAM/WATER - VAPORE/ACQUA	ELEKTRA 01899035	SIXTIES - MODERN
3	**1241009**	STEAM - VAPORE	ELEKTRA 00154035	MICROCASA
4	**1241132**	FOR BREW GROUPS - PER GRUPPI EROGAZIONE	ELEKTRA 01901035	SIXTIES - CLASSIC BARLUME
5	**1241130**	FOT SELECTOR SWITCH - PER COMMUTATORE	ELEKTRA 01965058	SIXTIES - CLASSIC BARLUME - MODERN
6	**1241131**	FOT SELECTOR SWITCH - PER COMMUTATORE	ELEKTRA 01908030	SIXTIES - CLASSIC BARLUME - MODERN

MANOPOLE EXPOBAR
KNOBS EXPOBAR
DREHKNÖPFE EXPOBAR
MANDOS EXPOBAR

1

2

3

4

Photo	LF Code	Notes	Suitable for	For machine model
1	**1241003**	STEAM/WATER - VAPORE/ACQUA	EXPOBAR 40000015	ELEN - G10 - MARKUS - MARKUS SILVER - MEGACREM - MONROC
2	**1241322**	STEAM - VAPORE	EXPOBAR 30370130	ELEN - G10 - MARKUS - MARKUS SILVER - MEGACREM - MONROC
3	**1241045**	WATER - ACQUA	EXPOBAR 30370120	ELEN - G10 - MARKUS - MARKUS SILVER - MEGACREM - MONROC
4	**1241461**	STEAM/WATER - VAPORE/ACQUA	EXPOBAR 40000080	EB61

MANOPOLE EXPOBAR
KNOBS EXPOBAR
DREHKNÖPFE EXPOBAR
MANDOS EXPOBAR

1

Photo	LF Code	Notes	Suitable for	For machine model
1	**1241001**	FOR INLET TAPS - PER RUBINETTI CARICO	EXPOBAR 40000040	EB61 - NEW ELEGANCE

MANOPOLE FAEMA
KNOBS FAEMA
DREHKNÖPFE FAEMA
MANDOS FAEMA

1

2

3

4

5

6

Photo	LF Code	Notes	Suitable for	For machine model
1	**1241552**	STEAM - VAPORE	FAEMA 3831117527	COMPACT
2	**1241042**	WATER - ACQUA	FAEMA	COMPACT
3	**1241356**	STEAM/WATER - VAPORE/ACQUA	FAEMA	COMPACT
4	**1241350**	---	FAEMA	COMPACT
5	**1241358**	STEAM - VAPORE	FAEMA	COMPACT
6	**1241357**	WATER - ACQUA	FAEMA	COMPACT

MANOPOLE FAEMA
KNOBS FAEMA
DREHKNÖPFE FAEMA
MANDOS FAEMA

1

2

3

4

Photo	LF Code	Notes	Suitable for	For machine model
1	**1241360**	---	FAEMA 4529132464	EXPRESS - E97 - SPECIAL
2	**1241461**	STEAM/WATER - VAPORE/ACQUA	FAEMA 4831135881	E61
3	**1241554**	STEAM/WATER - VAPORE/ACQUA	FAEMA 495764000	E98
4	**1241561**	---	FAEMA 485154000	E98

MANOPOLE FAEMA
KNOBS FAEMA
DREHKNÖPFE FAEMA
MANDOS FAEMA

1

2

3

4

5

6

Photo	LF Code	Notes	Suitable for	For machine model
1	**1241069**	STEAM/WATER - VAPORE/ACQUA	FAEMA 924828000	ELITE - E92 COMPACT
2	**1241319**	STEAM/WATER - VAPORE/ACQUA	FAEMA 3538133797	E91
2	**1241320**	STEAM/WATER - VAPORE/ACQUA	FAEMA 3533133797	E91
3	**1241362**	STEAM/WATER - VAPORE/ACQUA	FAEMA 4529132819	DUE
4	**1241036**	---	FAEMA 4831132762	DUE - DUE SMART - E91 - STYLEMA
5	**3241084**	---	FAEMA 4081132841	DUE - DUE SMART - E91 - STYLEMA
6	**1241177**	STEAM - VAPORE	FAEMA 930020010	ENOVA - SMART - STYLEMA

MANOPOLE FAEMA
KNOBS FAEMA
DREHKNÖPFE FAEMA
MANDOS FAEMA

1 2 3 4 5

Photo	LF Code	Notes	Suitable for	For machine model
1	**1255002**	SX	FAEMA 902146000	ELITE - E92 COMPACT
2	**1255001**	DX	FAEMA 902035000	ELITE
3	**1255003**	DX - SX	FAEMA 4831132314	DUE - DUE SMART - E91 - STYLEMA
4	**1241178**	DX	FAEMA 911563010	DUE - EMBLEMA - ENOVA - E91 - STYLEMA
5	**5038011**	SX	FAEMA 911564010	DUE - EMBLEMA - ENOVA - E91 - STYLEMA

MANOPOLE FAEMA
KNOBS FAEMA
DREHKNÖPFE FAEMA
MANDOS FAEMA

1 2 3 4

Photo	LF Code	Notes	Suitable for	For machine model
1	**1241542**	FOR SELECTOR SWITCH - PER COMMUTATORE	FAEMA 3831130501	COMPACT - E61
2	**1241033**	FOR SELECTOR SWITCH - PER COMMUTATORE	FAEMA 3529133899	DUE - EMBLEMA - ENOVA - E91 AMBASSADOR - E98 COMPACT
3	**1241557**	FOR SELECTOR SWITCH - PER COMMUTATORE	FAEMA 544400230	EMBLEMA
4	**1241318**	FOR SELECTOR SWITCH - PER COMMUTATORE	FAEMA 3538133899	E91

MANOPOLE FAEMA
KNOBS FAEMA
DREHKNÖPFE FAEMA
MANDOS FAEMA

1 2 3 4 5

Photo	LF Code	Notes	Suitable for	For machine model
1	**1241441**	FOR BREW GROUPS - PER GRUPPI EROGAZIONE	FAEMA 4741135910	E61
2	**1241041**	FOR BREW GROUPS - PER GRUPPI EROGAZIONE	FAEMA 4991136527	ELITE - EMBLEMA - ENOVA - E61
3	**1241484**	FOR CUP WARMER - PER SCALDATAZZE	FAEMA	E61
4	**1225011**	FOR INLET TAPS - PER RUBINETTI CARICO	FAEMA 4831117704	E61 - ELITE
5	**1225501**	FOR INLET TAPS - PER RUBINETTI CARICO	FAEMA	E61

MANOPOLE FIAMMA RST
KNOBS FIAMMA RST
DREHKNÖPFE FIAMMA RST
MANDOS FIAMMA RST

1 2 3 4

Photo	LF Code	Notes	Suitable for	For machine model
1	**1241003**	STEAM/WATER - VAPORE/ACQUA	FIAMMA 4.0.016.0023	ATLANTIC - PRESTIGE
2	**1241322**	STEAM - VAPORE	FIAMMA 4.0.016.0027	ATLANTIC - PRESTIGE
3	**1241045**	WATER - ACQUA	FIAMMA 4.0.016.0028	ATLANTIC - PRESTIGE
4	**1241187**	STEAM/WATER - VAPORE/ACQUA	FIAMMA 4.0.002.0029	MARINA - MINIBAR

MANOPOLE FIORENZATO CS
KNOBS FIORENZATO CS
DREHKNÖPFE FIORENZATO CS
MANDOS FIORENZATO CS

1 2 3 4 5

Photo	LF Code	Notes	Suitable for	For machine model
1	**1241172**	STEAM/WATER - VAPORE/ACQUA	FIORENZATO A1600044	BRICOLETTA - COLOMBINA - VOLANTE
2	**1241118**	STEAM - VAPORE	FIORENZATO A1600004	DUCALE - LIDO
3	**1241333**	STEAM - VAPORE	FIORENZATO A1600012	FENICE - VENEZIA
4	**1241401**	FOR BREW GROUPS - PER GRUPPI EROGAZIONE	FIORENZATO A1600001	BRICOLETTA - COLOMBINA - DUCALE - LIDO - VOLANTE
5	**1241334**	FOR INLET TAPS - PER RUBINETTI CARICO	FIORENZATO A1600125	OLD MODELS - MODELLI VECCHI

MANOPOLE FRACINO
KNOBS FRACINO
DREHKNÖPFE FRACINO
MANDOS FRACINO

1 2 3 4 5

Photo	LF Code	Notes	Suitable for	For machine model
1	**1241192**	STEAM/WATER - VAPORE/ACQUA	FRACINO FC222H/R	BAMBINO
2	**1241193**	STEAM/WATER - VAPORE/ACQUA	FRACINO FC222Q	BAMBINO
3	**1241191**	STEAM/WATER - VAPORE/ACQUA	FRACINO FC222P	BAMBINO
4	**1241194**	STEAM - VAPORE	FRACINO FC222L/RS	CONTEMPO - ROMANO
5	**1241195**	WATER - ACQUA	FRACINO FC222L/RW	CONTEMPO - ROMANO

MANOPOLE FUTURA
KNOBS FUTURA
DREHKNÖPFE FUTURA
MANDOS FUTURA

1

2

Photo	LF Code	Notes	Suitable for	For machine model
1	**1241386**	STEAM/WATER - VAPORE/ACQUA	FUTURA 200108	F100
2	**1241601**	STEAM - VAPORE	FUTURA 200109	F100

MANOPOLE FUTURMAT
HANDLES
HANDGRIFFE
MANDOS

1

2

3

4

5

6

Photo	LF Code	Notes	Suitable for	For machine model
1	**1241372**	STEAM/WATER - VAPORE/ACQUA	FUTURMAT 08185911	RIMINI
2	**1241371**	STEAM/WATER - VAPORE/ACQUA	FUTURMAT 08185804	RIMINI
3	**1241423**	STEAM - VAPORE	FUTURMAT 08147804	RIMINI
4	**1241402**	STEAM/WATER - VAPORE/ACQUA	FUTURMAT 07633308	CUSTOM - PALANCA - RIMINI OLD
5	**1241405**	STEAM/WATER - VAPORE/ACQUA	FUTURMAT 07633407	CUSTOM - PALANCA - RIMINI OLD
6	**1241481**	STEAM/WATER - VAPORE/ACQUA	FUTURMAT 07633209	CUSTOM - PALANCA - RIMINI OLD

MANOPOLE FUTURMAT
KNOBS FUTURMAT
DREHKNÖPFE FUTURMAT
MANDOS FUTURMAT

1

2

3

4

5

6

Photo	LF Code	Notes	Suitable for	For machine model
1	**1241422**	STEAM - VAPORE	FUTURMAT 08335400	F3
2	**1241434**	STEAM/WATER - VAPORE/ACQUA	FUTURMAT 08286106A	PALANCA
3	**1241405**	STEAM/WATER - VAPORE/ACQUA	FUTURMAT 07633407	PALANCA
4	**1241481**	STEAM/WATER - VAPORE/ACQUA	FUTURMAT 07633209	PALANCA
5	**1241551**	STEAM/WATER - VAPORE/ACQUA	FUTURMAT	ARIETE
6	**1186263**	STEAM/WATER - VAPORE/ACQUA	FUTURMAT 10983500	ARIETE

MANOPOLE FUTURMAT
KNOBS FUTURMAT
DREHKNÖPFE FUTURMAT
MANDOS FUTURMAT

1 2 3 4 5 6

Photo	LF Code	Notes	Suitable for	For machine model
1	**1241430**	FOR SELECTOR SWITCH - PER COMMUTATORE	FUTURMAT	---
2	**1241429**	FOR SELECTOR SWITCH - PER COMMUTATORE	FUTURMAT 08099600	---
3	**1241378**	FOR SELECTOR SWITCH - PER COMMUTATORE	FUTURMAT 08277006	RIMINI
4	**1241409**	FOR SELECTOR SWITCH - PER COMMUTATORE	FUTURMAT	---
5	**1241484**	FOR CUP WARMER - PER SCALDATAZZE	FUTURMAT	---
6	**1225501**	FOR BREW GROUPS - PER GRUPPI EROGAZIONE	FUTURMAT 08111200	ARIETE - CUSTOM - E61

MANOPOLE FUTURMAT
KNOBS FUTURMAT
DREHKNÖPFE FUTURMAT
MANDOS FUTURMAT

1 2 3 4 5

Photo	LF Code	Notes	Suitable for	For machine model
1	**1241408**	FOR INLET TAPS - PER RUBINETTI CARICO	FUTURMAT	---
2	**1241485**	FOR INLET TAPS - PER RUBINETTI CARICO	FUTURMAT 08099700	ARIETE
3	**1241487**	FOR INLET TAPS - PER RUBINETTI CARICO	FUTURMAT 08099500	ARIETE - PALANCA - RIMINI
4	**1241376**	FOR INLET TAPS - PER RUBINETTI CARICO	FUTURMAT 08183311	RIMINI
5	**1241486**	FOR INLET TAPS - PER RUBINETTI CARICO	FUTURMAT 08100000	ARIETE - RIMINI

MANOPOLE GAGGIA
KNOBS GAGGIA
DREHKNÖPFE GAGGIA
MANDOS GAGGIA

1 2 3 4 5 6

Photo	LF Code	Notes	Suitable for	For machine model
1	**1241176**	STEAM/WATER - VAPORE/ACQUA	GAGGIA 8027044000	DECO - D90 - E90 - LCD - XD - XE
2	**1241417**	STEAM - VAPORE	GAGGIA WGADM0794/003	DECO - D90 - E90 - LCD - XD - XE
2	**1241418**	WATER - ACQUA	GAGGIA	DECO - D90 - E90 - LCD - XD - XE
3	**1241416**	STEAM/WATER - VAPORE/ACQUA	GAGGIA	D90 - E90
4	**1241175**	WATER - ACQUA	GAGGIA DM0793/001	D90 - E90
5	**5038341**	STEAM - VAPORE	GAGGIA CF0189/A	CLASSIC - COFFEEDELUXE - COFFEE97
6	**1241159**	STEAM - VAPORE	GAGGIA RE0012	CAREZZA

MANOPOLE GAGGIA
KNOBS GAGGIA
DREHKNÖPFE GAGGIA
MANDOS GAGGIA

1

2

3

4

5

Photo	LF Code	Notes	Suitable for	For machine model
1	**5027276**	STEAM/WATER - VAPORE/ACQUA	GAGGIA WGA8001028000	GD - GE
2	**1241494**	FOR INLET TAPS - PER RUBINETTI CARICO	GAGGIA RB0718/01	D90 - E90
3	**1241420**	FOR INLET TAPS - PER RUBINETTI CARICO	GAGGIA DM0792/001	D90 - E90
4	**1241542**	FOR SELECTOR SWITCH - PER COMMUTATORE	GAGGIA 12000822	DECO
5	**5049137**	FOR GRINDING SETTING - PER REGOLAZIONE MACINATURA	GAGGIA 11003785	PLATINUM - UNICA

MANOPOLE GAGGIA SPAGNA
KNOBS GAGGIA SPAGNA
DREHKNÖPFE GAGGIA SPAGNA
MANDOS GAGGIA SPAGNA

1

2

3

4

5

6

Photo	LF Code	Notes	Suitable for	For machine model
1	**1241372**	STEAM/WATER - VAPORE/ACQUA	GAGGIA SPAGNA 08185911	NERA
2	**1241371**	STEAM/WATER - VAPORE/ACQUA	GAGGIA SPAGNA 08185804	NERA
3	**1241423**	STEAM - VAPORE	GAGGIA SPAGNA 08147804	NERA
4	**1241402**	STEAM/WATER - VAPORE/ACQUA	GAGGIA SPAGNA 07633308	NERA
5	**1241405**	STEAM/WATER - VAPORE/ACQUA	GAGGIA SPAGNA 07633407	NERA
6	**1241481**	STEAM/WATER - VAPORE/ACQUA	GAGGIA SPAGNA 07633209	NERA

MANOPOLE GAGGIA SPAGNA
KNOBS GAGGIA SPAGNA
DREHKNÖPFE GAGGIA SPAGNA
MANDOS GAGGIA SPAGNA

1

2

3

4

5

6

Photo	LF Code	Notes	Suitable for	For machine model
1	**1241422**	STEAM - VAPORE	GAGGIA SPAGNA 08335400	---
2	**1241434**	STEAM/WATER - VAPORE/ACQUA	GAGGIA SPAGNA 08286106A	PALANCA
3	**1241405**	STEAM/WATER - VAPORE/ACQUA	GAGGIA SPAGNA 07633407	PALANCA
4	**1241481**	STEAM/WATER - VAPORE/ACQUA	GAGGIA SPAGNA 07633209	PALANCA
5	**1241551**	STEAM/WATER - VAPORE/ACQUA	GAGGIA SPAGNA	---
6	**1186263**	STEAM/WATER - VAPORE/ACQUA	GAGGIA SPAGNA 10983500	---

MANOPOLE GAGGIA SPAGNA
KNOBS GAGGIA SPAGNA
DREHKNÖPFE GAGGIA SPAGNA
MANDOS GAGGIA SPAGNA

1

2

3

4

5

6

Photo	LF Code	Notes	Suitable for	For machine model
1	**1241430**	FOR SELECTOR SWITCH - PER COMMUTATORE	GAGGIA SPAGNA	---
2	**1241429**	FOR SELECTOR SWITCH - PER COMMUTATORE	GAGGIA SPAGNA 08099600	---
3	**1241378**	FOR SELECTOR SWITCH - PER COMMUTATORE	GAGGIA SPAGNA 08277006	NERA
4	**1241409**	FOR SELECTOR SWITCH - PER COMMUTATORE	GAGGIA SPAGNA	---
5	**1241484**	FOR CUP WARMER - PER SCALDATAZZE	GAGGIA SPAGNA	---
6	**1225501**	FOR BREW GROUPS - PER GRUPPI EROGAZIONE	GAGGIA SPAGNA 08111200	---

MANOPOLE GAGGIA SPAGNA
KNOBS GAGGIA SPAGNA
DREHKNÖPFE GAGGIA SPAGNA
MANDOS GAGGIA SPAGNA

1

2

3

4

5

Photo	LF Code	Notes	Suitable for	For machine model
1	**1241408**	FOR INLET TAPS - PER RUBINETTI CARICO	GAGGIA SPAGNA	---
2	**1241485**	FOR INLET TAPS - PER RUBINETTI CARICO	GAGGIA SPAGNA 08099700	---
3	**1241487**	FOR INLET TAPS - PER RUBINETTI CARICO	GAGGIA SPAGNA 08099500	NERA
4	**1241376**	FOR INLET TAPS - PER RUBINETTI CARICO	GAGGIA SPAGNA 08183311	NERA
5	**1241486**	FOR INLET TAPS - PER RUBINETTI CARICO	GAGGIA SPAGNA 08100000	NERA

MANOPOLE GRIMAC
KNOBS GRIMAC
DREHKNÖPFE GRIMAC
MANDOS GRIMAC

1

2

3

4

5

6

Photo	LF Code	Notes	Suitable for	For machine model
1	**1241333**	STEAM - VAPORE	GRIMAC 1210200002-GRC632	G11 - ZOLAI
1	**1241609**	WATER - ACQUA	GRIMAC 1210200003-GRC634	ZOLAI
2	**1241606**	STEAM - VAPORE	GRIMAC 2210200009-GR288	ZOLAII
2	**1241608**	WATER - ACQUA	GRIMAC 2210200008-GR289	ZOLAII
3	**1241164**	STEAM - VAPORE	GRIMAC 2210200011-GR292	G10 - MIA - NEW CIALDA VAPOR
3	**1241165**	WATER - ACQUA	GRIMAC 2210200010-GR288CR	G10 - NEW CIALDA VAPOR
4	**1241601**	STEAM - VAPORE	GRIMAC 1211000001-GRC631	---
5	**1241602**	WATER - ACQUA	GRIMAC 1211000002-GRC633	---
6	**1241461**	STEAM - VAPORE	GRIMAC 2210200003-GR331	ZOLAII

MANOPOLE GRIMAC
KNOBS GRIMAC
DREHKNÖPFE GRIMAC
MANDOS GRIMAC

1

2

3

Photo	LF Code	Notes	Suitable for	For machine model
1	**1241401**	FOR BREW GROUPS - PER GRUPPI EROGAZIONE	GRIMAC 1210100001-GR824	ECLISSE - TEN - TWENTY - ZOLAI - ZOLAII
2	**1241603**	FOR INLET TAPS - PER RUBINETTI CARICO	GRIMAC GR819	ZOLAI - ZOLAII
3	**1241605**	FOR INLET TAPS - PER RUBINETTI CARICO	GRIMAC GRT030	ECLISSE - TEN - TWENTY

MANOPOLE ISOMAC
KNOBS ISOMAC
DREHKNÖPFE ISOMAC
MANDOS ISOMAC

1

2

3

Photo	LF Code	Notes	Suitable for	For machine model
1	**1241209**	STEAM/WATER - VAPORE/ACQUA	ISOMAC IS000216	GIADA - MAVERICK
2	**1241210**	STEAM/WATER - VAPORE/ACQUA	ISOMAC IS000174	MILLENNIUM - VENUS
3	**1241401**	FOR BREW GROUPS - PER GRUPPI EROGAZIONE	ISOMAC 2716003	MILLENNIUM - MONDIALE - TEA - ZAFFIRO

MANOPOLE ITALCREM
KNOBS ITALCREM
DREHKNÖPFE ITALCREM
MANDOS ITALCREM

1

2

3

4

5

6

Photo	LF Code	Notes	Suitable for	For machine model
1	**1241372**	STEAM/WATER - VAPORE/ACQUA	ITALCREM 08185911	CAPRI
2	**1241371**	STEAM/WATER - VAPORE/ACQUA	ITALCREM 08185804	CAPRI
3	**1241423**	STEAM - VAPORE	ITALCREM 08147804	CAPRI
4	**1241402**	STEAM/WATER - VAPORE/ACQUA	ITALCREM 07633308	CAPRI
5	**1241405**	STEAM/WATER - VAPORE/ACQUA	ITALCREM 07633407	CAPRI
6	**1241481**	STEAM/WATER - VAPORE/ACQUA	ITALCREM 07633209	CAPRI

MANOPOLE ITALCREM
KNOBS ITALCREM
DREHKNÖPFE ITALCREM
MANDOS ITALCREM

1

2

3

4

5

6

Photo	LF Code	Notes	Suitable for	For machine model
1	**1241422**	STEAM - VAPORE	ITALCREM 08335400	---
2	**1241434**	STEAM/WATER - VAPORE/ACQUA	ITALCREM 08286106A	PALANCA
3	**1241405**	STEAM/WATER - VAPORE/ACQUA	ITALCREM 07633407	PALANCA
4	**1241481**	STEAM/WATER - VAPORE/ACQUA	ITALCREM 07633209	PALANCA
5	**1241551**	STEAM/WATER - VAPORE/ACQUA	ITALCREM	---
6	**1186263**	STEAM/WATER - VAPORE/ACQUA	ITALCREM 10983500	---

MANOPOLE ITALCREM
KNOBS ITALCREM
DREHKNÖPFE ITALCREM
MANDOS ITALCREM

1

2

3

4

5

6

Photo	LF Code	Notes	Suitable for	For machine model
1	**1241430**	FOR SELECTOR SWITCH - PER COMMUTATORE	ITALCREM	---
2	**1241429**	FOR SELECTOR SWITCH - PER COMMUTATORE	ITALCREM 08099600	---
3	**1241378**	FOR SELECTOR SWITCH - PER COMMUTATORE	ITALCREM 08277006	CAPRI
4	**1241409**	FOR SELECTOR SWITCH - PER COMMUTATORE	ITALCREM	---
5	**1241484**	FOR CUP WARMER - PER SCALDATAZZE	ITALCREM	---
6	**1225501**	FOR BREW GROUPS - PER GRUPPI EROGAZIONE	ITALCREM 08111200	---

MANOPOLE ITALCREM
KNOBS ITALCREM
DREHKNÖPFE ITALCREM
MANDOS ITALCREM

1

2

3

4

5

Photo	LF Code	Notes	Suitable for	For machine model
1	**1241408**	FOR INLET TAPS - PER RUBINETTI CARICO	ITALCREM	---
2	**1241485**	FOR INLET TAPS - PER RUBINETTI CARICO	ITALCREM 08099700	---
3	**1241487**	FOR INLET TAPS - PER RUBINETTI CARICO	ITALCREM 08099500	CAPRI
4	**1241376**	FOR INLET TAPS - PER RUBINETTI CARICO	ITALCREM 08183311	CAPRI
5	**1241486**	FOR INLET TAPS - PER RUBINETTI CARICO	ITALCREM 08100000	CAPRI

MANOPOLE LAVAZZA
KNOBS LAVAZZA
DREHKNÖPFE LAVAZZA
MANDOS LAVAZZA

1

2

3

4

5

6

Photo	LF Code	Notes	Suitable for	For machine model
1	**1241091**	STEAM/WATER - VAPORE/ACQUA	LAVAZZA 10066152	LB4700 - LB4700R - LB4701R - LB4711
2	**1241092**	WATER - ACQUA	LAVAZZA 10066154	LB4700 - LB4712
3	**1241093**	STEAM - VAPORE	LAVAZZA 10066153	LB4700 - LB4700R - LB4701R - LB4705 - LB4711 - LB4712
4	**5027276**	STEAM/WATER - VAPORE/ACQUA	LAVAZZA 10061965	LB4800 - LB4800 COMPACT
5	**1241417**	STEAM - VAPORE	LAVAZZA 10061398	LB4800
6	**1241010**	FOR SELECTOR SWITCH - PER COMMUTATORE	LAVAZZA 10066200	LB4700 - LB4700R - LB4701R

MANOPOLE MAGISTER
KNOBS MAGISTER
DREHKNÖPFE MAGISTER
MANDOS MAGISTER

1

Photo	LF Code	Notes	Suitable for	For machine model
1	**1241148**	STEAM - VAPORE	MAGISTER 030020	KAPPA

MANOPOLE MAIRALI
KNOBS MAIRALI
DREHKNÖPFE MAIRALI
MANDOS MAIRALI

1

2

3

4

5

6

Photo	LF Code	Notes	Suitable for	For machine model
1	**1241372**	STEAM/WATER - VAPORE/ACQUA	MAIRALI 08185911	GIULIETTA
2	**1241371**	STEAM/WATER - VAPORE/ACQUA	MAIRALI 08185804	GIULIETTA
3	**1241423**	STEAM - VAPORE	MAIRALI 08147804	GIULIETTA
4	**1241402**	STEAM/WATER - VAPORE/ACQUA	MAIRALI 07633308	GIULIETTA
5	**1241405**	STEAM/WATER - VAPORE/ACQUA	MAIRALI 07633407	GIULIETTA
6	**1241481**	STEAM/WATER - VAPORE/ACQUA	MAIRALI 07633209	GIULIETTA

MANOPOLE MAIRALI
KNOBS MAIRALI
DREHKNÖPFE MAIRALI
MANDOS MAIRALI

1

2

3

4

5

6

Photo	LF Code	Notes	Suitable for	For machine model
1	**1241422**	STEAM - VAPORE	MAIRALI 08335400	---
2	**1241434**	STEAM/WATER - VAPORE/ACQUA	MAIRALI 08286106A	PALANCA
3	**1241405**	STEAM/WATER - VAPORE/ACQUA	MAIRALI 07633407	PALANCA
4	**1241481**	STEAM/WATER - VAPORE/ACQUA	MAIRALI 07633209	PALANCA
5	**1241551**	STEAM/WATER - VAPORE/ACQUA	MAIRALI	---
6	**1186263**	STEAM/WATER - VAPORE/ACQUA	MAIRALI 10983500	---

MANOPOLE MAIRALI
KNOBS MAIRALI
DREHKNÖPFE MAIRALI
MANDOS MAIRALI

1

2

3

4

5

6

Photo	LF Code	Notes	Suitable for	For machine model
1	**1241430**	FOR SELECTOR SWITCH - PER COMMUTATORE	MAIRALI	---
2	**1241429**	FOR SELECTOR SWITCH - PER COMMUTATORE	MAIRALI 08099600	---
3	**1241378**	FOR SELECTOR SWITCH - PER COMMUTATORE	MAIRALI 08277006	GIULIETTA
4	**1241409**	FOR SELECTOR SWITCH - PER COMMUTATORE	MAIRALI	---
5	**1241484**	FOR CUP WARMER - PER SCALDATAZZE	MAIRALI	---
6	**1225501**	FOR BREW GROUPS - PER GRUPPI EROGAZIONE	MAIRALI 08111200	---

MANOPOLE MAIRALI
KNOBS MAIRALI
DREHKNÖPFE MAIRALI
MANDOS MAIRALI

1

2

3

4

5

Photo	LF Code	Notes	Suitable for	For machine model
1	**1241408**	FOR INLET TAPS - PER RUBINETTI CARICO	MAIRALI	---
2	**1241485**	FOR INLET TAPS - PER RUBINETTI CARICO	MAIRALI 08099700	---
3	**1241487**	FOR INLET TAPS - PER RUBINETTI CARICO	MAIRALI 08099500	GIULIETTA
4	**1241376**	FOR INLET TAPS - PER RUBINETTI CARICO	MAIRALI 08183311	GIULIETTA
5	**1241486**	FOR INLET TAPS - PER RUBINETTI CARICO	MAIRALI 08100000	GIULIETTA

MANOPOLE MARCFI-ANCAS
KNOBS MARCFI-ANCAS
DREHKNÖPFE MARCFI-ANCAS
MANDOS MARCFI-ANCAS

1

2

Photo	LF Code	Notes	Suitable for	For machine model
1	**1241341**	STEAM/WATER - VAPORE/ACQUA	MARCFI-ANCAS BL-3046	---
2	**1241342**	STEAM/WATER - VAPORE/ACQUA	MARCFI-ANCAS	---

MANOPOLE MARZOCCO
KNOBS MARZOCCO
DREHKNÖPFE MARZOCCO
MANDOS MARZOCCO

1

2

3

4

5

6

Photo	LF Code	Notes	Suitable for	For machine model
1	**1241219**	COARSE THREAD - FILETTATURA GROSSA	MARZOCCO L165/V	LINEA - FB70
1	**1241386**	FINE THREAD - FILETTATURA FINE	MARZOCCO	LINEA - FB70
2	**1241350**	STEAM/WATER - VAPORE/ACQUA	MARZOCCO L165/M	LINEA - FB70
3	**1241358**	STEAM - VAPORE	MARZOCCO L165/MV	LINEA - FB70
3	**1241357**	WATER - ACQUA	MARZOCCO L165/MA	LINEA - FB70
4	**1241098**	STEAM - VAPORE	MARZOCCO F.1.006	FB/80 - GB/5
5	**1241097**	STEAM - VAPORE	MARZOCCO F.1.007	FB/80 - GB/5
6	**1241542**	FOR SELECTOR SWITCH - PER COMMUTATORE	MARZOCCO L400/K	LINEA - FB70

MANOPOLE MCE
KNOBS MCE
DREHKNÖPFE MCE
MANDOS MCE

1

Photo	LF Code	Notes	Suitable for	For machine model
1	**1241010**	FOR SELECTOR SWITCH - PER COMMUTATORE	MCE 15271	START

MANOPOLE NUOVA SIMONELLI
KNOBS NUOVA SIMONELLI
DREHKNÖPFE NUOVA SIMONELLI
MANDOS NUOVA SIMONELLI

1

2

3

4

Photo	LF Code	Notes	Suitable for	For machine model
1	**1241548**	STEAM/WATER - VAPORE/ACQUA	NUOVA SIMONELLI 05000022	MAC 2000 - PROGRAM VIP
2	**1241025**	STEAM/WATER - VAPORE/ACQUA	NUOVA SIMONELLI 05000815	APPIA - APPIA COMPACT - AURELIA - AURELIA II
3	**1241030**	STEAM/WATER - VAPORE/ACQUA	NUOVA SIMONELLI 05080021	BEACH - OPTIMA
4	**1241912**	FOR SELECTOR SWITCH - PER COMMUTATORE	NUOVA SIMONELLI 05000064	PREMIER - PROGRAM

MANOPOLE ORCHESTRALE
KNOBS ORCHESTRALE
DREHKNÖPFE ORCHESTRALE
MANDOS ORCHESTRALE

1

2

Photo	LF Code	Notes	Suitable for	For machine model
1	**1241180**	STEAM/WATER - VAPORE/ACQUA	ORCHESTRALE D15278016	PHONICA
2	**1241179**	STEAM/WATER - VAPORE/ACQUA	ORCHESTRALE D15278015	ETNICA

MANOPOLE PAVONI
KNOBS PAVONI
DREHKNÖPFE PAVONI
MANDOS PAVONI

1

2

3

4

5

6

Photo	LF Code	Notes	Suitable for	For machine model
1	**1241157**	STEAM/WATER - VAPORE/ACQUA	PAVONI 2711014	BAR - HOTEL - PUB
2	**1241412**	STEAM - VAPORE	PAVONI 37102101	BAR - HOTEL - PUB
2	**1241613**	WATER - ACQUA	PAVONI 37102102	BAR - HOTEL - PUB
3	**1241414**	STEAM/WATER - VAPORE/ACQUA	PAVONI 37100701	P1 - P3 - P90
4	**1241526**	STEAM - VAPORE	PAVONI 380103	P1 - P3 - P90
5	**5011730**	STEAM/WATER - VAPORE/ACQUA	PAVONI 3710559	BAR - HOTEL - PUB
6	**1241114**	STEAM - VAPORE	PAVONI 475010	EUROPICCOLA - PROFESSIONAL - STRADIVARI

MANOPOLE PAVONI
KNOBS PAVONI
DREHKNÖPFE PAVONI
MANDOS PAVONI

1 2

Photo	LF Code	Notes	Suitable for	For machine model
1	**1241441**	FOR BREW GROUPS - PER GRUPPI EROGAZIONE	PAVONI 4750012	BAR - HOTEL - PUB
2	**1241410**	FOR INLET TAPS - PER RUBINETTI CARICO	PAVONI 475019	BAR - HOTEL - PUB

MANOPOLE PROMAC
KNOBS PROMAC
DREHKNÖPFE PROMAC
MANDOS PROMAC

1 2 3

Photo	LF Code	Notes	Suitable for	For machine model
1	**1241109**	STEAM - VAPORE	PROMAC 80630211	CLUB - COMPACT - GREEN
2	**1241110**	WATER - ACQUA	PROMAC 80630212	CLUB - COMPACT - GREEN
3	**1241821**	FOR SELECTOR SWITCH - PER COMMUTATORE	PROMAC 38123090	COMPACT - GREEN

MANOPOLE QUICK MILL
KNOBS QUICK MILL
KNÖPFE QUICK MILL
MANDOS QUICK MILL

1

Photo	LF Code	Notes	Suitable for	For machine model
1	**1241208**	STEAM/WATER - VAPORE/ACQUA	QUICK MILL PL0980MRN	0995 VETRANO

MANOPOLE RANCILIO
KNOBS RANCILIO
DREHKNÖPFE RANCILIO
MANDOS RANCILIO

1 2 3 4 5 6

Photo	LF Code	Notes	Suitable for	For machine model
1	**1241046**	STEAM - VAPORE	RANCILIO 10060175	EPOCA
2	**1241824**	WATER - ACQUA	RANCILIO 10060176	EPOCA
3	**1241831**	STEAM - VAPORE	RANCILIO 10060152	S20 - Z11
4	**1241830**	WATER - ACQUA	RANCILIO 10060162	S20 - Z11
5	**5030150**	STEAM - VAPORE	RANCILIO 38121037	SILVIA
6	**1241821**	FOR SELECTOR SWITCH - PER COMMUTATORE	RANCILIO 38123090	Z11

MANOPOLE RANCILIO
KNOBS RANCILIO
DREHKNÖPFE RANCILIO
MANDOS RANCILIO

1 2 3 4 5 6

Photo	LF Code	Notes	Suitable for	For machine model
1	**5056833**	STEAM - VAPORE	RANCILIO 10060183	CLASSE10 - CLASSE6 - CLASSE7 - CLASSE8 - CLASSE9 - EPOCA
2	**5062752**	WATER - ACQUA	RANCILIO 10060182	CLASSE10 - CLASSE6 - CLASSE7 - CLASSE8 - CLASSE9 - EPOCA
3	**5033626**	STEAM - VAPORE	RANCILIO 10060181	CLASSE10 - CLASSE6 - CLASSE7 - CLASSE8 - CLASSE9 - EPOCA
4	**1241048**	STEAM - VAPORE	RANCILIO 10705087	CLASSE10
5	**1241833**	STEAM/WATER - VAPORE/ACQUA	RANCILIO 10060177	MILLENNIUM
6	**5055880**	STEAM - VAPORE	RANCILIO 10060186	SILVIA NEW

MANOPOLE RENEKA
KNOBS RENEKA
DREHKNÖPFE RENEKA
MANDOS RENEKA

1 2 3 4

Photo	LF Code	Notes	Suitable for	For machine model
1	**1241145**	STEAM/WATER - VAPORE/ACQUA	RENEKA 9208030	VIVAE - VIVAS
2	**1241140**	STEAM/WATER - VAPORE/ACQUA	RENEKA 9208032	VIVAE - VIVAS
3	**1241196**	STEAM/WATER - VAPORE/ACQUA	RENEKA AT7371509	AMICI - ATALANTE
4	**1241401**	FOR BREW GROUPS - PER GRUPPI EROGAZIONE	RENEKA AT7371511	AMICI - ATALANTE

MANOPOLE ROYAL
KNOBS ROYAL
DREHKNÖPFE ROYAL
MANDOS ROYAL

1

2

3

4

5

6

Photo	LF Code	Notes	Suitable for	For machine model
1	**1241217**	STEAM/WATER - VAPORE/ACQUA	ROYAL 4001006	SYNCHRO
2	**1241057**	STEAM - VAPORE	ROYAL 4001023	SYNCHRO - VALLELUNGA LEVA
3	**1241321**	STEAM/WATER - VAPORE/ACQUA	ROYAL 4001010	DIADEMA - SYNCHRO
4	**1241322**	STEAM - VAPORE	ROYAL 4001020	DIADEMA - SYNCHRO
5	**1241045**	WATER - ACQUA	ROYAL 4001025	DIADEMA - SYNCHRO
6	**1241401**	FOR BREW GROUPS - PER GRUPPI EROGAZIONE	ROYAL 4001005	DIADEMA - SYNCHRO

MANOPOLE SAB ITALIA
KNOBS SAB ITALIA
DREHKNÖPFE SAB ITALIA
MANDOS SAB ITALIA

1

Photo	LF Code	Notes	Suitable for	For machine model
1	**1241333**	STEAM - VAPORE	SAB ITALIA SVTMM005	E96 - MODERNA

MANOPOLE SAECO
KNOBS SAECO
DREHKNÖPFE SAECO
MANDOS SAECO

1

2

3

4

5

Photo	LF Code	Notes	Suitable for	For machine model
1	**1241153**	STEAM - VAPORE	SAECO 227720953	CAFECREMA - CAFENOVA - VIAROMA - VIENNA - VIENNA DELUXE
2	**1241124**	STEAM - VAPORE	SAECO 227720753	SPIDEM - TREVI
3	**1241125**	STEAM/WATER - VAPORE/ACQUA	SAECO 11004374	ODEA
4	**5027276**	STEAM/WATER - VAPORE/ACQUA	SAECO WGA8001028000	AROMA
5	**1241417**	STEAM - VAPORE	SAECO WGADM0794/003	AROMA

MANOPOLE SAECO
KNOBS SAECO
DREHKNÖPFE SAECO
MANDOS SAECO

1

2

Photo	LF Code	Notes	Suitable for	For machine model
1	**3241084**	---	SAECO 120460100	--
2	**5049137**	FOR GRINDING SETTING - PER REGOLAZIONE MACINATURA	GAGGIA 11003785	PLATINUM - UNICA

MANOPOLE SAN MARCO
KNOBS SAN MARCO
DREHKNÖPFE SAN MARCO
MANDOS SAN MARCO

1

2

3

4

5

6

Photo	LF Code	Notes	Suitable for	For machine model
1	**1241450**	STEAM/WATER - VAPORE/ACQUA	SAN MARCO 106414	105
2	**1241442**	STEAM/WATER - VAPORE/ACQUA	SAN MARCO 106026	85 - 95 - LEVA
3	**1241102**	STEAM/WATER - VAPORE/ACQUA	SAN MARCO 106708	100
4	**1241449**	FOR SELECTOR SWITCH - PER COMMUTATORE	SAN MAECO 106413	105
5	**1241448**	FOR SELECTOR SWITCH - PER COMMUTATORE	SAN MARCO 106108	85 - 95 - LEVA
6	**5032723**	FOR SELECTOR SWITCH - PER COMMUTATORE	SAN MARCO 506709	LEVA - 100 - 85 FLEXA-E - 85 TOP

MANOPOLE SAN MARCO
KNOBS SAN MARCO
DREHKNÖPFE SAN MARCO
MANDOS SAN MARCO

1

2

3

4

5

6

Photo	LF Code	Notes	Suitable for	For machine model
1	**1225035**	FOR INLET TAPS - PER RUBINETTI CARICO	SAN MARCO 106412	85 - 105 - LEVA
2	**1241061**	FOR INLET TAPS - PER RUBINETTI CARICO	SAN MARCO 106107	95
3	**1241516**	FOR INLET TAPS - PER RUBINETTI CARICO	SAN MARCO 106072	EUROPA95 - NS85
4	**1241515**	FOR INLET TAPS - PER RUBINETTI CARICO	SAN MARCO 106007	PREZIOSA
5	**1241446**	FOR CUP WARMER - PER SCALDATAZZE	SAN MARCO 106064	LEVA
6	**1241441**	FOR BREW GROUPS - PER GRUPPI EROGAZIONE	SAN MARCO 106020	OLD MODELS - MODELLI VECCHI

MANOPOLE SANREMO
KNOBS SANREMO
DREHKNÖPFE SANREMO
MANDOS SANREMO

1

2

3

Photo	LF Code	Notes	Suitable for	For machine model
1	**1241184**	STEAM/WATER - VAPORE/ACQUA	SANREMO 10402074	AMALFI - CAPRI - MILANO LX - PISA - VENEZIA
2	**1241186**	STEAM - VAPORE	SANREMO 10351114	AMALFI - CAPRI - MILANO LX - PISA
3	**1241185**	WATER - ACQUA	SANREMO 10351115	AMALFI - CAPRI - PISA

MANOPOLE SCALA
KNOBS SCALA
DREHKNÖPFE SCALA
MANDOS SCALA

1

2

3

4

5

Photo	LF Code	Notes	Suitable for	For machine model
1	**1241321**	STEAM/WATER - VAPORE/ACQUA	SCALA	BUTTERFLY - CARMEN - EROICA - IRIS - NORMA
2	**1241322**	STEAM - VAPORE	SCALA C-0283	BUTTERFLY - CARMEN - EROICA - IRIS - NORMA
3	**1241045**	WATER - ACQUA	SCALA C-0295	BUTTERFLY - CARMEN - EROICA - IRIS - NORMA
4	**1241461**	STEAM/WATER - VAPORE/ACQUA	SCALA C-0199	EROICA
5	**1241188**	FOR BREW GROUPS - PER GRUPPI EROGAZIONE	SCALA C-0546	BUTTERFLY - EROICA

MANOPOLE SPAZIALE
KNOBS SPAZIALE
DREHKNÖPFE SPAZIALE
MANDOS SPAZIALE

1

2

3

4

5

6

Photo	LF Code	Notes	Suitable for	For machine model
1	**1241081**	STEAM/WATER - VAPORE/ACQUA	SPAZIALE 08468	S5 - S5 COMPACT - S40
2	**1241080**	STEAM/WATER - VAPORE/ACQUA	SPAZIALE 08499	S5
3	**1241085**	STEAM - VAPORE	SPAZIALE 08531	S5 - S5 COMPACT - S40
4	**1241086**	WATER - ACQUA	SPAZIALE 08532	S5 - S5 COMPACT - S40
5	**1241528**	STEAM - VAPORE	SPAZIALE 06037	S3 - S8
6	**1241212**	WATER - ACQUA	SPAZIALE 10726	S8

MANOPOLE SPAZIALE
KNOBS SPAZIALE
DREHKNÖPFE SPAZIALE
MANDOS SPAZIALE

1

2

3

4

5

Photo	LF Code	Notes	Suitable for	For machine model
1	**1241519**	STEAM - VAPORE	SPAZIALE 10661	S2 - S2 SPAZIO
2	**1241211**	WATER - ACQUA	SPAZIALE 10662	S2 - S2 SPAZIO
3	**5069488**	STEAM/WATER - VAPORE/ACQUA	SPAZIALE 00247	S2
4	**1241524**	STEAM - VAPORE	SPAZIALE 04959	S1 - SELETRON
5	**1241525**	STEAM - VAPORE	SPAZIALE 04963	S1 - SELETRON

MANOPOLE SPAZIALE
KNOBS SPAZIALE
DREHKNÖPFE SPAZIALE
MANDOS SPAZIALE

1

2

3

4

5

Photo	LF Code	Notes	Suitable for	For machine model
1	**1241521**	STEAM/WATER - VAPORE/ACQUA	SPAZIALE 01558	NEW - RAPID
2	**1241522**	STEAM - VAPORE	SPAZIALE 03061	NEW - RAPID
3	**1241523**	WATER - ACQUA	SPAZIALE 03062	NEW - RAPID
4	**1241538**	STEAM - VAPORE	SPAZIALE 06039	S3 - S8
5	**5033801**	WATER - ACQUA	SPAZIALE 06038	S3

MANOPOLE SPAZIALE
KNOBS SPAZIALE
DREHKNÖPFE SPAZIALE
MANDOS SPAZIALE

1

2

3

4

5

Photo	LF Code	Notes	Suitable for	For machine model
1	**1241517**	FOR BREW GROUPS - PER GRUPPI EROGAZIONE	SPAZIALE 01837	S1 - S3 - SPAZIO - NEW - MANUAL
2	**1241518**	FOR INLET TAPS - PER RUBINETTI CARICO	SPAZIALE 04916	S3 - S5 - S5 COMPACT - S40 - SELETRON
3	**1241521**	FOR INLET TAPS - PER RUBINETTI CARICO	SPAZIALE 01558	NEW - RAPID
4	**1439036**	FOR INLET TAPS - PER RUBINETTI CARICO	SPAZIALE 03063	NEW - RAPID
5	**1241152**	FOR SELECTOR SWITCH - PER COMMUTATORE	SPAZIALE 06049	S3 - SELETRON

MANOPOLE SPINEL
KNOBS SPINEL
DREHKNÖPFE SPINEL
MANDOS SPINEL

1

2

Photo	LF Code	Notes	Suitable for	For machine model
1	**1241172**	STEAM/WATER - VAPORE/ACQUA	SPINEL SR.000.050.002	DUE LUX - RONDO LUX - TRE LUX
2	**3242337**	FOR BREW GROUPS - PER GRUPPI EROGAZIONE	SPINEL SR.000.040.001	DUE LUX - DUETTO - DUETTO LUX

MANOPOLE VIBIEMME
KNOBS VIBIEMME
DREHKNÖPFE VIBIEMME
MANDOS VIBIEMME

1

2

3

4

5

6

Photo	LF Code	Notes	Suitable for	For machine model
1	**1241336**	STEAM/WATER - VAPORE/ACQUA	VIBIEMME MANPRUACVP	DOSAPLUS - MERCURY - REPLICA
2	**1241003**	STEAM/WATER - VAPORE/ACQUA	VIBIEMME MANPRUACUPEVO	EVOLUTION - KOMETA - MINIMAX - REVOLUTION - SILVER
3	**1241057**	STEAM - VAPORE	VIBIEMME MANPDIVAEVORE	EVOLUTION - KOMETA - MINIMAX - REVOLUTION - SILVER
3	**1241058**	WATER - ACQUA	VIBIEMME MANPDIACEVORE	EVOLUTION - KOMETA - MINIMAX - REVOLUTION - SILVER
4	**1241461**	STEAM/WATER - VAPORE/ACQUA	VIBIEMME MANPRUVAACRE	CHIMAERA - CUBO - REPLICA
5	**1241182**	STEAM/WATER - VAPORE/ACQUA	VIBIEMME MANPRUSC	DOMOBAR - DOMOBARJUNIOR - DOMOBARSUPER
5	**1241183**	STEAM/WATER - VAPORE/ACQUA	VIBIEMME MANPRUSCDOMSA	DOMOBARJUNIOR - DOMOBARSUPER
6	**1241401**	FOR BREW GROUPS - PER GRUPPI EROGAZIONE	VIBIEMME MANPPOLE	CUBO - DOMOBAR - DOMOBARJUNIOR - DOMOBARSUPER

MANOPOLE VICTORIA ARDUINO
KNOBS VICTORIA ARDUINO
DREHKNÖPFE VICTORIA ARDUINO
MANDOS VICTORIA ARDUINO

1

2

Photo	LF Code	Notes	Suitable for	For machine model
1	**1241386**	STEAM/WATER - VAPORE/ACQUA	VICTORIA ARDUINO 40500002	ATHENA LEVA - ATHENAS - VENUSBAR
2	**5081750**	STEAM/WATER - VAPORE/ACQUA	VICTORIA ARDUINO 05000424	VA388 BLACK EAGLE

MANOPOLE VISACREM
KNOBS VISACREM
DREHKNÖPFE VISACREM
MANDOS VISACREM

1

2

3

4

5

6

Photo	LF Code	Notes	Suitable for	For machine model
1	**1241372**	STEAM/WATER - VAPORE/ACQUA	VISACREM 08185911	NERA
2	**1241371**	STEAM/WATER - VAPORE/ACQUA	VISACREM 08185804	NERA
3	**1241423**	STEAM - VAPORE	VISACREM 08147804	NERA
4	**1241402**	STEAM/WATER - VAPORE/ACQUA	VISACREM 07633308	NERA
5	**1241405**	STEAM/WATER - VAPORE/ACQUA	VISACREM 07633407	NERA
6	**1241481**	STEAM/WATER - VAPORE/ACQUA	VISACREM 07633209	NERA

MANOPOLE VISACREM
KNOBS VISACREM
DREHKNÖPFE VISACREM
MANDOS VISACREM

1

2

3

4

5

6

Photo	LF Code	Notes	Suitable for	For machine model
1	**1241422**	STEAM - VAPORE	VISACREM 08335400	---
2	**1241434**	STEAM/WATER - VAPORE/ACQUA	VISACREM 08286106A	PALANCA
3	**1241405**	STEAM/WATER - VAPORE/ACQUA	VISACREM 07633407	PALANCA
4	**1241481**	STEAM/WATER - VAPORE/ACQUA	VISACREM 07633209	PALANCA
5	**1241551**	STEAM/WATER - VAPORE/ACQUA	VISACREM	---
6	**1186263**	STEAM/WATER - VAPORE/ACQUA	VISACREM 10983500	---

MANOPOLE VISACREM
KNOBS VISACREM
DREHKNÖPFE VISACREM
MANDOS VISACREM

1

2

3

4

5

6

Photo	LF Code	Notes	Suitable for	For machine model
1	**1241430**	FOR SELECTOR SWITCH - PER COMMUTATORE	VISACREM	---
2	**1241429**	FOR SELECTOR SWITCH - PER COMMUTATORE	VISACREM 08099600	---
3	**1241378**	FOR SELECTOR SWITCH - PER COMMUTATORE	VISACREM 08277006	NERA
4	**1241409**	FOR SELECTOR SWITCH - PER COMMUTATORE	VISACREM	---
5	**1241484**	FOR CUP WARMER - PER SCALDATAZZE	VISACREM	---
6	**1225501**	FOR BREW GROUPS - PER GRUPPI EROGAZIONE	VISACREM 08111200	---

MANOPOLE VISACREM
KNOBS VISACREM
DREHKNÖPFE VISACREM
MANDOS VISACREM

1

2

3

4

5

Photo	LF Code	Notes	Suitable for	For machine model
1	**1241408**	FOR INLET TAPS - PER RUBINETTI CARICO	VISACREM	---
2	**1241485**	FOR INLET TAPS - PER RUBINETTI CARICO	VISACREM 08099700	---
3	**1241487**	FOR INLET TAPS - PER RUBINETTI CARICO	VISACREM 08099500	NERA
4	**1241376**	FOR INLET TAPS - PER RUBINETTI CARICO	VISACREM 08183311	NERA
5	**1241486**	FOR INLET TAPS - PER RUBINETTI CARICO	VISACREM 08100000	NERA

MANOPOLE WEGA
KNOBS WEGA
DREHKNÖPFE WEGA
MANDOS WEGA

1

2

3

4

5

Photo	LF Code	Notes	Suitable for	For machine model
1	**1241466**	STEAM - VAPORE	WEGA WY15275	EURO2000 - FORMULA MILANO
1	**1241467**	WATER - ACQUA	WEGA WY15276	EURO2000 - FORMULA MILANO
2	**1241451**	STEAM - VAPORE	WEGA WY15254	AIRI - ORION ECO
2	**1241453**	WATER - ACQUA	WEGA WY15253	AIRI - ORION ECO
3	**1241201**	STEAM - VAPORE	WEGA WY15251	COLOSSEUM - ESPRESSA - EURO2000 - FORMULA MILANO - NOVA
3	**5047209**	WATER - ACQUA	WEGA WY15250	COLOSSEUM - ESPRESSA - EURO2000 - FORMULA MILANO - NOVA
4	**1241452**	STEAM - VAPORE	WEGA WY15265	AIRY - ANTARES - MINI - POLARIS
4	**1241468**	WATER - ACQUA	WEGA WY15264	AIRY - ANTARES - MINI - POLARIS
5	**1241089**	STEAM - VAPORE	WEGA WY15272	ATLAS - COMBINOVA - JUNIOR - MININOVA - NOVA - POLARIS
5	**1241090**	WATER - ACQUA	WEGA WY15273	ATLAS - COMBINOVA - JUNIOR - NOVA - POLARIS - START

MANOPOLE WEGA
KNOBS WEGA
DREHKNÖPFE WEGA
MANDOS WEGA

1

2

3

4

5

6

Photo	LF Code	Notes	Suitable for	For machine model
1	**1241094**	STEAM/WATER - VAPORE/ACQUA	WEGA WY15029050	VENERE
2	**1241095**	STEAM/WATER - VAPORE/ACQUA	WEGA WY15029051	VENERE
3	**1241091**	STEAM/WATER - VAPORE/ACQUA	WEGA WY15278007	COLOSSEUM - ESPRESSA - POLARIS - SPHERA
4	**1241093**	STEAM - VAPORE	WEGA WY29037	COLOSSEUM - ESPRESSA - POLARIS - SPHERA
4	**1241092**	WATER - ACQUA	WEGA WY29036	COLOSSEUM - ESPRESSA - POLARIS - SPHERA
5	**1241401**	FOR BREW GROUPS - PER GRUPPI EROGAZIONE	WEGA WY27421022	AIRY - ANTARES - ATLAS - NOVA - ORIONPLUS - POLARIS
6	**1241010**	FOR SELECTOR SWITCH - PER COMMUTATORE	WEGA WY15271	---

MANOPOLE ZACCONI
KNOBS ZACCONI
DREHKNÖPFE ZACCONI
MANDOS ZACCONI

1

Photo	LF Code	Notes	Suitable for	For machine model
1	**1241215**	STEAM/WATER - VAPORE/ACQUA	ZACCONI 34	ESPRESSO BABY - RIVIERA

MANOPOLE PORTAFILTRO UNIVERSALI
UNIVERSAL FILTER HOLDER HANDLES
GRIFFE FÜR SIEBTRÄGER UNIVERSELL
MANDOS PORTAFILTRO UNIVERSALES

1

2

3

Photo	LF Code	Connection	Suitable for
1	**1241505**	M10	ALL BRANDS - TUTTE LE MARCHE
1	**1241504**	M12	ALL BRANDS - TUTTE LE MARCHE
2	**1241269**	M10	ALL BRANDS - TUTTE LE MARCHE
2	**1241169**	M12	ALL BRANDS - TUTTE LE MARCHE
3	**1241502**	M10	ALL BRANDS - TUTTE LE MARCHE
3	**1241501**	M12	ALL BRANDS - TUTTE LE MARCHE

MANOPOLE PORTAFILTRO UNIVERSALI
UNIVERSAL FILTER HOLDER HANDLES
GRIFFE FÜR SIEBTRÄGER UNIVERSELL
MANDOS PORTAFILTRO UNIVERSALES

1

2

Photo	LF Code	Connection	Suitable for
1	**5051751**	M10	ALL BRANDS - TUTTE LE MARCHE
1	**5051102**	M12	ALL BRANDS - TUTTE LE MARCHE
2	**5054506**	M10	ALL BRANDS - TUTTE LE MARCHE
2	**5054505**	M12	ALL BRANDS - TUTTE LE MARCHE

MANOPOLE PORTAFILTRO UNIVERSALI
UNIVERSAL FILTER HOLDER HANDLES
GRIFFE FÜR SIEBTRÄGER UNIVERSELL
MANDOS PORTAFILTRO UNIVERSALES

1

2

3

Photo	LF Code	Connection	Suitable for
1	**1141006**	M10	ALL BRANDS - TUTTE LE MARCHE
1	**1141007**	M12	ALL BRANDS - TUTTE LE MARCHE
2	**1141004**	M10	ALL BRANDS - TUTTE LE MARCHE
2	**1141003**	M12	ALL BRANDS - TUTTE LE MARCHE
3	**5083515**	M10	ALL BRANDS - TUTTE LE MARCHE
3	**5055983**	M12	ALL BRANDS - TUTTE LE MARCHE

MANOPOLE PORTAFILTRO ASCASO
FILTER HOLDER HANDLES ASCASO
GRIFFE FÜR SIEBTRÄGER ASCASO
MANDOS PORTAFILTRO ASCASO

1

2

Photo	LF Code	Connection	Suitable for
1	**5065857**	M10	ASCASO I..289
2	**1141018**	M10	ASCASO I..858

MANOPOLE PORTAFILTRO ASTORIA/CMA
FILTER HOLDER HANDLES ASTORIA/CMA
GRIFFE FÜR SIEBTRÄGER ASTORIA/CMA
MANDOS PORTAFILTRO ASTORIA/CMA

1

2

3

4

5

6

Photo	LF Code	Connection	Suitable for
1	**1241206**	M12	ASTORIA/CMA 15263010
2	**1241469**	---	ASTORIA/CMA 15486006
3	**1186774**	---	ASTORIA/CMA 15296010
4	**1241067**	M12	ASTORIA/CMA 15262
5	**1241200**	---	ASTORIA/CMA 15261
6	**1225001**	---	ASTORIA/CMA 27220

MANOPOLE PORTAFILTRO BEZZERA
FILTER HOLDER HANDLES BEZZERA
GRIFFE FÜR SIEBTRÄGER BEZZERA
MANDOS PORTAFILTRO BEZZERA

1

2

3

Photo	LF Code	Connection	Suitable for
1	**1241380**	M12	BEZZERA 5963016
2	**1241381**	M12	BEZZERA 5963013
3	**1141009**	M12	BEZZERA 5978508

MANOPOLE PORTAFILTRO BFC
FILTER HOLDER HANDLES BFC
SIEBTRÄGERGRIFFE BFC
MANDOS PORTAFILTRO BFC

1

2

3

Photo	LF Code	Connection	Suitable for
1	**1141016**	M12	BFC 4002110
2	**1241200**	---	BFC
3	**1141010**	M12	BFC 4002120

MANOPOLE PORTAFILTRO BRASILIA
FILTER HOLDER HANDLES BRASILIA
GRIFFE FÜR SIEBTRÄGER BRASILIA
MANDOS PORTAFILTRO BRASILIA

1

2

3

Photo	LF Code	Connection	Suitable for
1	**1241200**	---	BRASILIA 01487.0.00.02
2	**1241067**	M12	BRASILIA 02638.0.00.02
3	**1225001**	---	BRASILIA 02111.0.00.04

MANOPOLE PORTAFILTRO BRUGNETTI/AURORA
FILTER HOLDER HANDLES BRUGNETTI/AURORA
GRIFFE FÜR SIEBTRÄGER BRUGNETTI/AURORA
MANDOS PORTAFILTRO BRUGNETTI/AURORA

1

Photo	LF Code	Connection	Suitable for
1	**1241067**	M12	BRUGNETTI 000043

MANOPOLE PORTAFILTRO CASADIO
FILTER HOLDER HANDLESCASADIO
GRIFFE FÜR SIEBTRÄGER CASADIO
MANDOS PORTAFILTRO CASADIO

1

Photo	LF Code	Connection	Suitable for
1	**1141017**	M10	CASADIO 957821000

MANOPOLE PORTAFILTRO CIMBALI
FILTER HOLDER HANDLES CIMBALI
GRIFFE FÜR SIEBTRÄGER CIMBALI
MANDOS PORTAFILTRO CIMBALI

1

2

3

4

5

6

Photo	LF Code	Connection	Suitable for
1	**1241137**	M10	CIMBALI 472-792-000
2	**1241316**	M10	CIMBALI 3831-091-811
3	**1241301**	M10	CIMBALI 537-021-900
4	**1241156**	M10	CIMBALI 537-025-200
4	**1241256**	M10	CIMBALI
5	**1141002**	---	CIMBALI 492-006-000
6	**1141001**	---	CIMBALI 492-008-000

MANOPOLE PORTAFILTRO ELEKTRA
FILTER HOLDER HANDLES ELEKTRA
GRIFFE FÜR SIEBTRÄGER ELEKTRA
MANDOS PORTAFILTRO ELEKTRA

1

2

Photo	LF Code	Connection	Suitable for
1	**1241067**	M12	ELEKTRA 00062035
2	**1241133**	M12	ELEKTRA 01897035

MANOPOLE PORTAFILTRO ELEKTRA
KNOBS FILTER HOLDER ELEKTRA
SIEBTRÄGERDREHKNÖPFE ELEKTRA
MANDOS PORTAFILTRO ELEKTRA

1

2

3

4

5

6

Photo	LF Code	Connection	Suitable for
1	**1241019**	M10	ELEKTRA 00176039
2	**1241021**	M10	ELEKTRA 00469035
3	**1241018**	M10	ELEKTRA 00176038
4	**1241017**	---	ELEKTRA 00177014
5	**1241022**	---	ELEKTRA 01367019
6	**1165008**	M10/M8	ELEKTRA 00186035

MANOPOLE PORTAFILTRO FAEMA
FILTER HOLDER HANDLES FAEMA
GRIFFE FÜR SIEBTRÄGER FAEMA
MANDOS PORTAFILTRO FAEMA

1 2 3

Photo	LF Code	Connection	Suitable for
1	**1241035**	---	FAEMA 3831136652
2	**1241065**	---	FAEMA
3	**1241316**	M10	FAEMA 3831091811

MANOPOLE PORTAFILTRO FUTURMAT
FILTER HOLDER HANDLES FUTURMAT
GRIFFE FÜR SIEBTRÄGER FUTURMAT
MANDOS PORTAFILTRO FUTURMAT

1 2 3

Photo	LF Code	Connection	Suitable for
1	**1241482**	---	FUTURMAT 08103600
2	**1241483**	M12	FUTURMAT 07821705
3	**1141011**	---	FUTURMAT

MANOPOLE PORTAFILTRO GAGGIA
FILTER HOLDER HANDLES GAGGIA
GRIFFE FÜR SIEBTRÄGER GAGGIA
MANDOS PORTAFILTRO GAGGIA

1 2 3 4 5

Photo	LF Code	Connection	Suitable for
1	**1141005**	M10	GAGGIA WGA8001061000
2	**5059486**	---	GAGGIA DY0006
3	**5047149**	---	GAGGIA 4332037000
4	**5047150**	---	GAGGIA 4332038000
5	**1241055**	M10	GAGGIA S371125

MANOPOLE PORTAFILTRO GAGGIA SPAGNA
FILTER HOLDER HANDLES GAGGIA SPAGNA
GRIFFE FÜR SIEBTRÄGER GAGGIA SPAGNA
MANDOS PORTAFILTRO GAGGIA SPAGNA

1 2 3 4

Photo	LF Code	Connection	Suitable for
1	**1241482**	---	GAGGIA SPAGNA 08103600
2	**1241488**	---	GAGGIA SPAGNA 08233514
3	**1241483**	M12	GAGGIA SPAGNA 07821705
4	**1141011**	---	GAGGIA SPAGNA

MANOPOLE PORTAFILTRO ITALCREM
FILTER HOLDER HANDLES ITALCREM
GRIFFE FÜR SIEBTRÄGER ITALCREM
MANDOS PORTAFILTRO ITALCREM

1 2 3 4

Photo	LF Code	Connection	Suitable for
1	**1241482**	---	ITALCREM 08103600
2	**1241488**	---	ITALCREM 08233514
3	**1241483**	M12	ITALCREM 07821705
4	**1141011**	---	ITALCREM

MANOPOLE PORTAFILTRO MAIRALI
FILTER HOLDER HANDLES MAIRALI
GRIFFE FÜR SIEBTRÄGER MAIRALI
MANDOS PORTAFILTRO MAIRALI

1 2 3

Photo	LF Code	Connection	Suitable for
1	**1241482**	---	MAIRALI 08103600
2	**1241488**	---	MAIRALI 08233514
3	**1241483**	M12	MAIRALI 07821705

MANOPOLE PORTAFILTRO MARZOCCO
FILTER HOLDER HANDLES MARZOCCO
DREHNKNÖPFE SIEBTRÄGER MARZOCCO
MANDOS PORTAFILTRO MARZOCCO

1

Photo	LF Code	Connection	Suitable for
1	**1241096**	M12	MARZOCCO L112/G12

MANOPOLE PORTAFILTRO MCE
FILTER HOLDER HANDLES MCE
SIEBTRÄGERDREHKNÖPFE MCE
MANDOS PORTAFILTRO MCE

1

2

3

Photo	LF Code	Connection	Suitable for
1	**1241206**	M12	MCE 15263010
2	**1241469**	---	MCE 15486006
3	**1186774**	---	MCE 15296010

MANOPOLE PORTAFILTRO NUOVA SIMONELLI
FILTER HOLDER HANDLES NUOVA SIMONELLI
GRIFFE FÜR SIEBTRÄGER NUOVA SIMONELLI
MANDOS PORTAFILTRO NUOVA SIMONELLI

1

2

3

4

5

Photo	LF Code	Connection	Suitable for
1	**5035724**	M10	NUOVA SIMONELLI 07300601
2	**1241027**	---	NUOVA SIMONELLI 05000840
3	**1241031**	M10	NUOVA SIMONELLI 07300601
4	**1241026**	---	NUOVA SIMONELLI 05000844
5	**1241032**	---	NUOVA SIMONELLI 05000842

MANOPOLE PORTAFILTRO NUOVA SIMONELLI
KNOBS FILTER HOLDER NUOVA SIMONELLI
SIEBTRÄGERDREHKNÖPFE NUOVA SIMONELLI
MANDOS PORTAFILTRO NUOVA SIMONELLI

1

2

3

Photo	LF Code	Connection	Suitable for
1	**1241067**	M12	NUOVA SIMONELLI 40500003
2	**1241023**	---	NUOVA SIMONELLI 05080014
3	**1241200**	---	NUOVA SIMONELLI 17000025

MANOPOLE PORTAFILTRO ORCHESTRALE
FILTER HOLDER HANDLES ORCHESTRALE
GRIFFE FÜR SIEBTRÄGER ORCHESTRALE
MANDOS PORTAFILTRO ORCHESTRALE

1

2

3

Photo	LF Code	Connection	Suitable for
1	**1241206**	M12	ORCHESTRALE D15263010
2	**1241469**	---	ORCHESTRALE D15486006
3	**1186774**	---	ORCHESTRALE D15296010

MANOPOLE PORTAFILTRO PAVONI
FILTER HOLDER HANDLES PAVONI
GRIFFE FÜR SIEBTRÄGER PAVONI
MANDOS PORTAFILTRO PAVONI

1

2

3

4

5

Photo	LF Code	Connection	Suitable for
1	**1241700**	M12	PAVONI 2710003
2	**1241023**	---	PAVONI 420003
3	**1241055**	M10	PAVONI 371125
4	**1241200**	---	PAVONI 475026
5	**1225001**	---	PAVONI 3115034

MANOPOLE PORTAFILTRO PROMAC
FILTER HOLDER HANDLES PROMAC
GRIFFE FÜR SIEBTRÄGER PROMAC
MANDOS PORTAFILTRO PROMAC

1

2

Photo	LF Code	Connection	Suitable for
1	**1241511**	---	PROMAC 38121018
2	**1241051**	---	PROMAC 38121032

MANOPOLE PORTAFILTRO RANCILIO
FILTER HOLDER HANDLES RANCILIO
GRIFFE FÜR SIEBTRÄGER RANCILIO
MANDOS PORTAFILTRO RANCILIO

1

2

3

4

5

Photo	LF Code	Connection	Suitable for
1	**1141012**	---	RANCILIO 10705091
2	**1241047**	---	RANCILIO 38123569
3	**1241050**	---	RANCILIO 38123599
4	**1241511**	---	RANCILIO 38121018
5	**1241051**	---	RANCILIO 38121032

MANOPOLE PORTAFILTRO RENEKA
FILTER HOLDER HANDLES RENEKA
GRIFFE FÜR SIEBTRÄGER RENEKA
MANDOS PORTAFILTRO RENEKA

1

Photo	LF Code	Connection	Suitable for
1	**1242020**	M10	RENEKA 9004927

Manopole portafiltro
Handles for filterholder
Griffe für Siebträger
Mandos portafiltro

MANOPOLE PORTAFILTRO ROYAL
FILTER HOLDER HANDLES ROYAL
SIEBTRÄGERGRIFFE ROYAL
MANDOS PORTAFILTRO ROYAL

1

2

3

Photo	LF Code	Connection	Suitable for
1	**1141016**	M12	ROYAL 4002110
2	**1241200**	---	ROYAL
3	**1141010**	M12	ROYAL

MANOPOLE PORTAFILTRO SAECO
FILTER HOLDER HANDLES SAECO
GRIFFE FÜR SIEBTRÄGER SAECO
MANDOS PORTAFILTRO SAECO

1

Photo	LF Code	Connection	Suitable for
1	**1141005**	M10	SAECO WGA8001061000

MANOPOLE PORTAFILTRO SAN MARCO
FILTER HOLDER HANDLES SAN MARCO
GRIFFE FÜR SIEBTRÄGER SAN MARCO
MANDOS PORTAFILTRO SAN MARCO

1

2

3

4

Photo	LF Code	Connection	Suitable for
1	**1241105**	M10	SAN MARCO 106055
2	**1241104**	M10	SAN MARCO 106502
3	**1241103**	---	SAN MARCO 106005
4	**1141015**	M10	SAN MARCO 106573

MANOPOLE PORTAFILTRO SCALA
FILTER HOLDER HANDLES SCALA
GRIFFE FÜR SIEBTRÄGER SCALA
MANDOS PORTAFILTRO SCALA

1

Photo	LF Code	Connection	Suitable for
1	**1141010**	M12	SCALA

MANOPOLE PORTAFILTRO SPAZIALE
FILTER HOLDER HANDLES SPAZIALE
GRIFFE FÜR SIEBTRÄGER SPAZIALE
MANDOS PORTAFILTRO SPAZIALE

1

Photo	LF Code	Connection	Suitable for
1	**1241160**	M12x1.5	SPAZIALE 04962

MANOPOLE PORTAFILTRO VIBIEMME
FILTER HOLDER HANDLES VIBIEMME
GRIFFE FÜR SIEBTRÄGER VIBIEMME
MANDOS PORTAFILTRO VIBIEMME

1

2

Photo	LF Code	Connection	Suitable for
1	**1241060**	M10	VIBIEMME PORTIMPPFNEW
2	**1241200**	---	VIBIEMME MANLEVAPISTON

MANOPOLE PORTAFILTRO VICTORIA ARDUINO
FILTER HOLDER HANDLES VICTORIA ARDUINO
GRIFFE FÜR SIEBTRÄGER VICTORIA ARDUINO
MANDOS PORTAFILTRO VICTORIA ARDUINO

1

2

3

4

5

Photo	LF Code	Connection	Suitable for
1	**1241163**	M10	VICTORIA ARDUINO 05000840-G
2	**1241031**	M10	VICTORIA ARDUINO 07300601
3	**1241067**	M12	VICTORIA ARDUINO 40500003
4	**1241200**	---	VICTORIA ARDUINO 17000025
5	**1225001**	---	VICTORIA ARDUINO 17000026

MANOPOLE PORTAFILTRO VISACREM
FILTER HOLDER HANDLES VISACREM
GRIFFE FÜR SIEBTRÄGER VISACREM
MANDOS PORTAFILTRO VISACREM

1

2

3

Photo	LF Code	Connection	Suitable for
1	**1241482**	---	VISACREM 08103600
2	**1241483**	M12	VISACREM 07821705
3	**1141011**	---	VISACREM

MANOPOLE PORTAFILTRO WEGA
FILTER HOLDER HANDLES WEGA
GRIFFE FÜR SIEBTRÄGER WEGA
MANDOS PORTAFILTRO WEGA

1

2

3

4

5

Photo	LF Code	Connection	Suitable for
1	**1241206**	M12	WEGA WY15263010
2	**1241469**	---	WEGA WY15486006
3	**1186774**	---	WEGA WY15296010
4	**1241067**	M12	WEGA WY15262
5	**1241200**	---	WEGA WY15261

MOLLE ASTORIA/CMA
SPRINGS ASTORIA/CMA
FEDER ASTORIA/CMA
RESORTES ASTORIA/CMA

1

2

3

4

5

Photo	LF Code	Dimensions	Notes	Suitable for	For machine model
1	**1250372**	ø 11.5x16 mm	FOR WATER/STEAM PIPES - PER TUBI ACQUA/VAPORE	ASTORIA/CMA 10452	ALL MODELS - TUTTI I MODELLI
2	**1250001**	ø 11,4x18 mm	FOR WATER/STEAM PIPES - PER TUBI ACQUA/VAPORE	ASTORIA/CMA 10465	DIVINA - GLORIA - GLORIA P4Y - PERLA 4D
3	**1250546**	ø 14x44 mm	FOR INLET TAPS - PER RUBINETTI CARICO	ASTORIA/CMA 10451	ARGENTA - BRAVA - DIVINA
4	**1250501**	ø 46x141 mm	FOR BREW GROUPS - PER GRUPPI EROGAZIONE	ASTORIA/CMA 27250	RAPALLO AL
5	**1250332**	9x12 mm	FOR KNOBS - PER MANOPOLE	ASTORIA/CMA 10459	---

MOLLE BEZZERA
SPRINGS BEZZERA
FEDER BEZZERA
RESORTES BEZZERA

1

2

3

4

5

Photo	LF Code	Dimensions	Notes	Suitable for	For machine model
1	**3053919**	---	FOR MOUNTING PANELS - PER FISSAGGIO PANNELLI	BEZZERA 5471533	ELLISSE - EBBIS
2	**5049014**	ø 7.5x22 mm	FOR EXPANSION VALVE - PER VALVOLA ESPANSIONE	BEZZERA 5471505	ELLISSE - EBBIS
3	**1250358**	ø 8x33 mm	FOR EXPANSION VALVE - PER VALVOLA ESPANSIONE	BEZZERA 5471506.01	B2009 COMPACT - B2013 - B6000
4	**1250446**	ø 9x35 mm	FOR INLET TAPS - PER RUBINETTI CARICO	BEZZERA 5471512	B2000 - B2000 AL
5	**5057135**	ø 11.7x16 mm	FOR WATER/STEAM PIPES - PER TUBI ACQUA/VAPORE	BEZZERA 5471532	BZ07 - BZ09 - BZ10 - BZ13 - GALATEA

MOLLE BEZZERA
SPRINGS BEZZERA
FEDER BEZZERA
MUELLES BEZZERA

1

2

3

4

5

Photo	LF Code	Dimensions	Notes	Suitable for	For machine model
1	**1250011**	ø 14.6x21 mm	FOR BREW GROUPS - PER GRUPPI EROGAZIONE	BEZZERA 7479970	GALATEA - GIULIA - UNICA
2	**1250545**	ø 14x10 mm	FOR WATER/STEAM PIPES - PER TUBI ACQUA/VAPORE	BEZZERA 5471504	B2000 - ELLISSE - EBBIS
3	**1250515**	ø 14x33 mm	FOR BREW GROUPS - PER GRUPPI EROGAZIONE	BEZZERA 7479944	GALATEA - GIULIA - UNICA
4	**1250537**	ø 14x45 mm	FOR BREW GROUPS - PER GRUPPI EROGAZIONE	BEZZERA 7479936	GALATEA - GIULIA - UNICA
5	**1250357**	ø 46x131 mm	FOR BREW GROUPS - PER GRUPPI EROGAZIONE	BEZZERA 5471537	B2000 AL - ELLISSE AL - STREGA

MOLLE BFC
SPRINGS BFC
FEDER BFC
RESORTES BFC

1 2 3 4 5 6

Photo	LF Code	Dimensions	Notes	Suitable for	For machine model
1	**1250536**	ø 13x42 mm	FOR BREW GROUPS - PER GRUPPI EROGAZIONE	BFC 0530030	CLASSICA - DELUX - LIRA
2	**1250515**	ø 14x33 mm	FOR BREW GROUPS - PER GRUPPI EROGAZIONE	BFC 0530045	CLASSICA - DELUX - LIRA
3	**1250537**	ø 14x45 mm	FOR BREW GROUPS - PER GRUPPI EROGAZIONE	BFC 0530030	CLASSICA - DELUX - LIRA
4	**1250516**	ø 15x28 mm	FOR BREW GROUPS - PER GRUPPI EROGAZIONE	BFC 0530095	CLASSICA - DELUX - LIRA
5	**1250354**	ø 49x150 mm	FOR BREW GROUPS - PER GRUPPI EROGAZIONE	BFC 0530255	CLASSICA LEVA
6	**1250355**	ø 34x142 mm	FOR BREW GROUPS - PER GRUPPI EROGAZIONE	BFC	CLASSICA LEVA

MOLLE BFC
SPRINGS BFC
FEDER BFC
RESORTES BFC

1 2 3 4

Photo	LF Code	Dimensions	Notes	Suitable for	For machine model
1	**1250415**	ø 10x32 mm	FOR STEAM/WATER TAPS - PER RUBINETTI VAPORE/ACQUA	BFC 0540070	CLASSICA - DELUX - LIRA
2	**1250019**	ø 12x16.5 mm	FOR STEAM/WATER TAPS - PER RUBINETTI VAPORE/ACQUA	BFC 0540100	CLASSICA - DELUX - LIRA
3	**1250157**	ø 12.5x30 mm	FOR INLET TAPS - PER RUBINETTI CARICO	BFC 0510110	CLASSICA - DELUX - LIRA
4	**1250202**	ø 8x30 mm	FOR INLET TAPS - PER RUBINETTI CARICO	BFC 0510160	CLASSICA - DELUX - LIRA

MOLLE BIANCHI
SPRINGS BIANCHI
FEDER BIANCHI
RESORTES BIANCHI

1 2

Photo	LF Code	Dimensions	Notes	Suitable for	For machine model
1	**1250402**	ø 7x28 mm	FOR BREW GROUPS - PER GRUPPI EROGAZIONE	BIANCHI 43125216	LUCIA - SOFIA
2	**1250151**	ø 12x15 mm	FOR WATER/STEAM PIPES - PER TUBI ACQUA/VAPORE	BIANCHI 07034711	SOFIA

MOLLE BRASILIA
SPRINGS BRASILIA
FEDER BRASILIA
RESORTES BRASILIA

1 2 3 4 5 6

Photo	LF Code	Dimensions	Notes	Suitable for	For machine model
1	**1250204**	ø 7x33 mm	FOR INLET TAPS - PER RUBINETTI CARICO	BRASILIA 17694.0.00.03	CENTURY - GRADISCA
2	**1250201**	ø 8x20 mm	FOR INLET TAPS - PER RUBINETTI CARICO	BRASILIA 05538.0.00.03	CENTURY AMERICA
3	**1250202**	ø 8x30 mm	FOR INLET TAPS - PER RUBINETTI CARICO	BRASILIA 00870.0.00.03	CENTURY - PORTOFINO
4	**1250074**	ø 10.5x27 mm	FOR STEAM/WATER TAPS - PER RUBINETTI VAPORE/ACQUA	BRASILIA 10962.0.00.03	CENTURY - PORTOFINO
5	**1250203**	ø 11x30 mm	FOR INLET TAPS - PER RUBINETTI CARICO	BRASILIA 00884.0.00.03	CENTURY - PORTOFINO
6	**1250548**	ø 11x58 mm	FOR BREW GROUPS - PER GRUPPI EROGAZIONE	BRASILIA 03788.0.00.03	CENTURY RESTYLING

MOLLE BRASILIA
SPRINGS BRASILIA
FEDER BRASILIA
RESORTES BRASILIA

1 2 3 4 5 6

Photo	LF Code	Dimensions	Notes	Suitable for	For machine model
1	**1250151**	ø 12x15 mm	FOR WATER/STEAM PIPES - PER TUBI ACQUA/VAPORE	BRASILIA 07060.0.00.03	CLASSICA - GRADISCA
2	**1250011**	ø 14.6x21 mm	FOR BREW GROUPS - PER GRUPPI EROGAZIONE	BRASILIA 12941.0.00.03	DECURTIS - GRADISCA
3	**1250515**	ø 14x33 mm	FOR BREW GROUPS - PER GRUPPI EROGAZIONE	BRASILIA 08953.0.00.03	DECURTIS - GRADISCA
4	**1250537**	ø 14x45 mm	FOR BREW GROUPS - PER GRUPPI EROGAZIONE	BRASILIA 08952.0.00.03	DECURTIS - GRADISCA
5	**1250521**	ø 15x17 mm	FOR STEAM/WATER TAPS - PER RUBINETTI VAPORE/ACQUA	BRASILIA 00879.0.00.03	BAR - AMERICA
6	**1250501**	ø 46x141 mm	FOR BREW GROUPS - PER GRUPPI EROGAZIONE	BRASILIA 02222.0.00.03	DECURTIS - PORTOFINO AL

MOLLE BRUGNETTI/AURORA
SPRINGS BRUGNETTI/AURORA
FEDER BRUGNETTI/AURORA
RESORTES BRUGNETTI/AURORA

1

Photo	LF Code	Dimensions	Notes	Suitable for	For machine model
1	**1250506**	ø 9x14 mm	FOR BREW GROUPS - PER GRUPPI EROGAZIONE	BRUGNETTI 000180	ALEXIA - C

MOLLE CARIMALI
SPRINGS CARIMALI
FEDER CARIMALI
RESORTES CARIMALI

1

2

3

4

5

6

Photo	LF Code	Dimensions	Notes	Suitable for	For machine model
1	**3053919**	---	FOR MOUNTING PANELS - PER FISSAGGIO PANNELLI	CARIMALI 95.00970	---
2	**1250211**	---	FOR KNOBS - PER MANOPOLE	CARIMALI 14.00856	ECO - SYSTEMA - UNO
3	**1250214**	ø 9.5x10 mm	FOR INLET TAPS - PER RUBINETTI CARICO	CARIMALI 14.00172	ECO - SYSTEMA - UNO
4	**1250361**	ø 10.5x32 mm	FOR STEAM/WATER TAPS - PER RUBINETTI VAPORE/ACQUA	CARIMALI 95.05032	PRATICA
5	**1250212**	ø 11.5x31 mm	FOR STEAM/WATER TAPS - PER RUBINETTI VAPORE/ACQUA	CARIMALI 14.00847	ECO - SYSTEMA - UNO
6	**1250019**	ø 12x16.5 mm	FOR WATER/STEAM PIPES - PER TUBI ACQUA/VAPORE	CARIMALI 13.00059	ETA BETA - E9 ESPRESSO - KIKKO

MOLLE CASADIO
SPRINGS CASADIO
FEDER CASADIO
RESORTES CASADIO

1

2

Photo	LF Code	Dimensions	Notes	Suitable for	For machine model
1	**1250226**	ø 11x24 mm	FOR WATER/STEAM PIPES - PER TUBI ACQUA/VAPORE	CASADIO 485061010	DIECI - DODICI - VENTI
2	**1250228**	ø 11,5x24 mm	FOR EXPANSION VALVE - PER VALVOLA ESPANSIONE	CASADIO 418014000	DAFNE

MOLLE CIMBALI
SPRINGS CIMBALI
FEDER CIMBALI
RESORTES CIMBALI

1

2

3

4

5

6

Photo	LF Code	Dimensions	Notes	Suitable for	For machine model
1	**1081012**	---	FOR BREW GROUPS - PER GRUPPI EROGAZIONE	CIMBALI 458-094-000	M20 - M21 LEVA - M25
2	**1250162**	ø 6.5x20 mm	FOR INLET TAPS - PER RUBINETTI CARICO	CIMBALI 4731-027-556	M39 - M39GT
3	**1250228**	ø 11.5x24 mm	FOR INLET TAPS - PER RUBINETTI CARICO	CIMBALI 418-014-000	M27 - M27 2008 - M28
4	**1250226**	ø 11x24 mm	FOR STEAM/WATER TAPS - PER RUBINETTI VAPORE/ACQUA	CIMBALI 485-061-010	M25 - M27 - M28
5	**1250404**	ø 11x31 mm	FOR BREW GROUPS - PER GRUPPI EROGAZIONE	CIMBALI 4731-030-495	M20 - M25
6	**1250160**	ø 14x23 mm	FOR INLET TAPS - PER RUBINETTI CARICO	CIMBALI 4731-022-508	M39 - M39GT

MOLLE CIMBALI
SPRINGS CIMBALI
FEDER CIMBALI
RESORTES CIMBALI

1

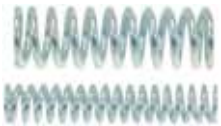
2

3

4

Photo	LF Code	Dimensions	Notes	Suitable for	For machine model
1	**1250227**	ø 18x30 mm	FOR INLET TAPS - PER RUBINETTI CARICO	CIMBALI 419-004-030	M27 - M28 - M30
2	**1250013**	ø 48/30x150/150 mm	FOR BREW GROUPS - PER GRUPPI EROGAZIONE	CIMBALI	M20 - M25
3	**1250233**	---	FOR BREW GROUPS - PER GRUPPI EROGAZIONE	CIMBALI 460-242-000	M20 - M25
4	**1250015**	---	FOR FLOAT - PER GALLEGGIANTE	CIMBALI 464-078-000	M20 - M25 - M28 - M30

MOLLE DELONGHI
SPRINGS DELONGHI
FEDER DELONGHI
RESORTES DELONGHI

1

2

Photo	LF Code	Dimensions	Notes	Suitable for	For machine model
1	**1250344**	ø 1.2 mm	---	DELONGHI 6113210021	ECAM23.210.W - ECAM26.455.C
2	**1250342**	ø 1.1 mm	---	DELONGHI 6132101300	ECAM23.210.W - ECAM26.455.C

MOLLE DELONGHI
SPRINGS DELONGHI
FEDERN DELONGHI
MUELLES DELONGHI

1

2

3

4

Photo	LF Code	Dimensions	Notes	Suitable for	For machine model
1	**1250340**	ø 7.5/5x25 mm	FOR BREW GROUPS - PER GRUPPI EROGAZIONE	DELONGHI 6132106900	ESAM5400 - ESAM5400EX
2	**1250370**	ø 9/5.5x13 mm	FOR BREW GROUPS - PER GRUPPI EROGAZIONE	DELONGHI 6113211931	ECI341 - ECOV310 - EC150 - EC300M
3	**1250347**	ø 7/4.3x11.4 mm	FOR CREAM FROTHER VALVE - PER VALVOLA MONTACREMA	DELONGHI 6132106700	ESAM5400
4	**1250339**	ø 7/5x13 mm	FOR CREAM FROTHERS - PER MONTACREMA	DELONGHI 6132112200	ECAM23.210.W - ECAM26.455.C

MOLLE DELONGHI
SPRINGS DELONGHI
FEDER DELONGHI
RESORTES DELONGHI

1

2

3

4

Photo	LF Code	Dimensions	Notes	Suitable for	For machine model
1	**5076359**	ø 13.7 mm	FOR EJECTION ROD - PER ASTA ESPULSIONE	DELONGHI 6132103500	EAM2000 - ECA14200 - ESAM04.350
2	**5059580**	ø 12x5 mm	FOR KNOB - PER MANOPOLA	DELONGHI 6113211791	BAR40 - BCO420 - ECI341 - EC150
3	**1250345**	ø 12.5/10.5x16 mm	FOR WATER CONTAINER - PER CONTENITORE ACQUA	DELONGHI 6132100800	ECOV310AZ - EC155 - EC300M
4	**1250341**	ø 12.5/11x16 mm	FOR WATER CONTAINER - PER CONTENITORE ACQUA	DELONGHI 6113210251	ECAM26.455.C

MOLLE ECM
SPRINGS ECM
FEDER ECM
RESORTES ECM

1

2

3

4

Photo	LF Code	Dimensions	Notes	Suitable for	For machine model
1	**1250073**	ø 14.5x32 mm	FOR INLET TAPS - PER RUBINETTI CARICO	ECM C019900100	LAURA - MICHELANGELO - RAFFAELLO
2	**1250515**	ø 14x33 mm	FOR BREW GROUPS - PER GRUPPI EROGAZIONE	ECM C219900431	GIOTTO - VENEZIANO
3	**1250537**	ø 14x45 mm	FOR BREW GROUPS - PER GRUPPI EROGAZIONE	ECM C219900423	GIOTTO - VENEZIANO
4	**1250516**	ø 15x28 mm	FOR BREW GROUPS - PER GRUPPI EROGAZIONE	ECM C219900427	GIOTTO - VENEZIANO

MOLLE ECM MANUFACTURE
SPRINGS ECM MANUFACTURE
FEDER ECM MANUFACTURE
MUELLES ECM MANUFACTURE

1

2

3

4

5

6

Photo	LF Code	Dimensions	Notes	Suitable for	For machine model
1	**1250348**	ø 10.5x29.3 mm	FOR WATER/STEAM PIPES - PER TUBI ACQUA/VAPORE	ECM MANUFACTURE P6003.13	ELEKTRONIKA II PROFI
2	**1250547**	ø 11.5x16 mm	FOR WATER/STEAM PIPES - PER TUBI ACQUA/VAPORE	ECM MANUFACTURE P6011	CLASSIKA II - MECHANIKA
3	**1250356**	ø 13x27 mm	FOR STEAM/WATER TAPS - PER RUBINETTI VAPORE/ACQUA	ECM MANUFACTURE P6003.7	ELEKTRONIKA II PROFI
4	**1250515**	ø 14x33 mm	FOR BREW GROUPS - PER GRUPPI EROGAZIONE	ECM MANUFACTURE C219900431	CLASSIKA II - MECHANIKA
5	**1250537**	ø 14x45 mm	FOR BREW GROUPS - PER GRUPPI EROGAZIONE	ECM MANUFACTURE C219900423	CLASSIKA II - MECHANIKA
6	**1250516**	ø 15x28 mm	FOR BREW GROUPS - PER GRUPPI EROGAZIONE	ECM MANUFACTURE C219900427	CLASSIKA II - MECHANIKA

MOLLE ELEKTRA
SPRINGS ELEKTRA
FEDER ELEKTRA
RESORTES ELEKTRA

1 2 3 4 5

Photo	LF Code	Dimensions	Notes	Suitable for	For machine model
1	**1250051**	---	FOR BREW GROUPS - PER GRUPPI EROGAZIONE	ELEKTRA 01902092	CLASSIC BARLUME - SIXTIES
2	**1250052**	ø 12.2x35 mm	FOR STEAM/WATER TAPS - PER RUBINETTI VAPORE/ACQUA	ELEKTRA 01189035	CLASSIC BARLUME - SIXTIES
3	**1250019**	ø 12x16.5 mm	FOR WATER/STEAM PIPES - PER TUBI ACQUA/VAPORE	ELEKTRA 01912035	CLASSIC BARLUME - SIXTIES
4	**1250050**	ø 20x19 mm	FOR BREW GROUPS - PER GRUPPI EROGAZIONE	ELEKTRA 01242035	CLASSIC BARLUME - SIXTIES
5	**1250017**	ø 37x94 mm	FOR BREW GROUPS - PER GRUPPI EROGAZIONE	ELEKTRA 00819014	MICROCASA

MOLLE EXPOBAR
SPRINGS EXPOBAR
FEDER EXPOBAR
RESORTES EXPOBAR

1 2 3 4

Photo	LF Code	Dimensions	Notes	Suitable for	For machine model
1	**1250071**	ø 8x32 mm	FOR INLET TAPS - PER RUBINETTI CARICO	EXPOBAR 55000010	EB61 - NEW ELEGANCE
2	**1250415**	ø 10x32 mm	FOR STEAM/WATER TAPS - PER RUBINETTI VAPORE/ACQUA	EXPOBAR 30370040	ELEN - G10 - MARKUS
3	**1250547**	ø 11.5x16 mm	FOR WATER/STEAM PIPES - PER TUBI ACQUA/VAPORE	EXPOBAR 30370076	ELEN - G10 - MARKUS
4	**1250163**	ø 12x30 mm	FOR INLET TAPS - PER RUBINETTI CARICO	EXPOBAR 55000020	EB61 - NEW ELEGANCE

MOLLE EXPOBAR
SPRINGS EXPOBAR
FEDERN EXPOBAR
MUELLES EXPOBAR

1 2 3 4

Photo	LF Code	Dimensions	Notes	Suitable for	For machine model
1	**1250536**	ø 13x42 mm	FOR BREW GROUPS - PER GRUPPI EROGAZIONE	EXPOBAR CTAV1-08	EB61 - OFFICE
2	**1250363**	ø 13.5x24 mm	FOR STEAM/WATER TAPS - PER RUBINETTI VAPORE/ACQUA	EXPOBAR 55000070	DIAMANT
3	**1250073**	ø 14.5x32 mm	FOR INLET TAPS - PER RUBINETTI CARICO	EXPOBAR 55000030	EB61 - ELEN - G10
4	**1250656**	ø 14.5x35 mm	FOR BREW GROUPS - PER GRUPPI EROGAZIONE	EXPOBAR CTAV1-06	EB61 - OFFICE

MOLLE FAEMA
SPRINGS FAEMA
FEDER FAEMA
RESORTES FAEMA

1 2 3 4 5 6

Photo	LF Code	Dimensions	Notes	Suitable for	For machine model
1	**1250334**	---	FOR STEAM/WATER TAPS - PER RUBINETTI VAPORE/ACQUA	FAEMA 911310000	ENOVA - STYLEMA
2	**1250162**	ø 6.5x20 mm	FOR INLET TAPS - PER RUBINETTI CARICO	FAEMA 4731027556	ELITE - E61
3	**1250403**	ø 7.5x27 mm	FOR BREW GROUPS - PER GRUPPI EROGAZIONE	FAEMA 4731021631	COMPACT - E64 - E66 - P4 - P6
4	**1250511**	ø 8x20 mm	FOR BREW GROUPS - PER GRUPPI EROGAZIONE	FAEMA 4731135893	E61
5	**1250202**	ø 8x30 mm	FOR INLET TAPS - PER RUBINETTI CARICO	FAEMA	E61
6	**1250415**	ø 10x32 mm	FOR STEAM/WATER TAPS - PER RUBINETTI VAPORE/ACQUA	FAEMA 4731103918	COMPACT - EXPRESS - E97

MOLLE FAEMA
SPRINGS FAEMA
FEDER FAEMA
RESORTES FAEMA

1 2 3 4 5 6

Photo	LF Code	Dimensions	Notes	Suitable for	For machine model
1	**1250228**	ø 11.5x24 mm	FOR INLET TAPS - PER RUBINETTI CARICO	FAEMA 418014000	ELITE - EMBLEMA - ENOVA
2	**1250226**	ø 11x24 mm	FOR STEAM/WATER TAPS - PER RUBINETTI VAPORE/ACQUA	FAEMA 485061010	ELITE - EMBLEMA - ENOVA
3	**1250404**	ø 11x31 mm	FOR STEAM/WATER TAPS - PER RUBINETTI VAPORE/ACQUA	FAEMA 4731030495	DUE - ELITE - EMBLEMA
4	**1250157**	ø 12.5x30 mm	FOR STEAM/WATER TAPS - PER RUBINETTI VAPORE/ACQUA	FAEMA 4731135884	E61
5	**1250163**	ø 12x30 mm	FOR INLET TAPS - PER RUBINETTI CARICO	FAEMA 4731023109	STAR
6	**1250408**	ø 13x18 mm	FOR STEAM/WATER TAPS - PER RUBINETTI VAPORE/ACQUA	FAEMA 4731132350	DUE - ELITE - EMBLEMA

MOLLE FAEMA
SPRINGS FAEMA
FEDER FAEMA
RESORTES FAEMA

1 2 3 4 5 6

Photo	LF Code	Dimensions	Notes	Suitable for	For machine model
1	**1250536**	ø 13x42 mm	FOR BREW GROUPS - PER GRUPPI EROGAZIONE	FAEMA 4731135896	E61
2	**1250160**	ø 14x23 mm	FOR INLET TAPS - PER RUBINETTI CARICO	FAEMA 4731022508	E61
3	**1250158**	ø 14x28 mm	FOR INLET TAPS - PER RUBINETTI CARICO	FAEMA 4731020408	E61
4	**1250515**	ø 14x33 mm	FOR BREW GROUPS - PER GRUPPI EROGAZIONE	FAEMA 4731135918	E61
5	**1250537**	ø 14x45 mm	FOR BREW GROUPS - PER GRUPPI EROGAZIONE	FAEMA	E61
6	**1250521**	ø 15x17 mm	FOR STEAM/WATER TAPS - PER RUBINETTI VAPORE/ACQUA	FAEMA 4731135883	E61

MOLLE FAEMA
SPRINGS FAEMA
FEDERN FAEMA
MUELLES FAEMA

1

2

3

Photo	LF Code	Dimensions	Notes	Suitable for	For machine model
1	**1250516**	ø 15x28 mm	FOR EXPANSION VALVE - PER VALVOLA ESPANSIONE	FAEMA	E61
2	**1250401**	ø 22x20 mm	FOR LEVEL - PER LIVELLO	FAEMA 4731018635	STAR
3	**1250417**	ø 26x14 mm	FOR WATER/STEAM PIPES - PER TUBI ACQUA/VAPORE	FAEMA 4731109279	COMPACT - EXPRESS - E97

MOLLE FIAMMA RST
SPRINGS FIAMMA RST
FEDER FIAMMA RST
RESORTES FIAMMA RST

1

2

3

4

5

Photo	LF Code	Dimensions	Notes	Suitable for	For machine model
1	**1250202**	ø 8x30 mm	FOR INLET TAPS - PER RUBINETTI CARICO	FIAMMA 5.0.016.0234	ATLANTIC - MARINA - PRESTIGE
2	**1250415**	ø 10x32 mm	FOR STEAM/WATER TAPS - PER RUBINETTI VAPORE/ACQUA	FIAMMA 5.0.016.0302	ATLANTIC - PRESTIGE
3	**1250548**	ø 11x58 mm	FOR BREW GROUPS - PER GRUPPI EROGAZIONE	FIAMMA 5.0.025.0006	PRESTIGE
4	**1250151**	ø 12x15 mm	FOR WATER/STEAM PIPES - PER TUBI ACQUA/VAPORE	FIAMMA 5.0.025.7060	ATLANTIC - PRESTIGE
5	**1250349**	ø 14.5x28 mm	FOR INLET TAPS - PER RUBINETTI CARICO	FIAMMA 5.0.016.0214	ATLANTIC - MARINA - PRESTIGE

MOLLE FIORENZATO CS
SPRINGS FIORENZATO CS
FEDER FIORENZATO CS
RESORTES FIORENZATO CS

1

2

3

Photo	LF Code	Dimensions	Notes	Suitable for	For machine model
1	**1250071**	ø 8x32 mm	FOR INLET TAPS - PER RUBINETTI CARICO	FIORENZATO A2200205	OLD MODELS
2	**1250365**	ø 11.5x30 mm	FOR STEAM/WATER TAPS - PER RUBINETTI VAPORE/ACQUA	FIORENZATO A2200002	DUCALE - FENICE
3	**1250151**	ø 12x15 mm	FOR WATER/STEAM PIPES - PER TUBI ACQUA/VAPORE	FIORENZATO A2200001	BRICOLETTA - DUCALE

MOLLE FIORENZATO CS
SPRINGS FIORENZATO CS
FEDERN FIORENZATO CS
MUELLES FIORENZATO CS

1

2

3

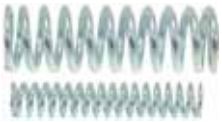
4

Photo	LF Code	Dimensions	Notes	Suitable for	For machine model
1	**1250073**	ø 14.5x32 mm	FOR BREW GROUPS - PER GRUPPI EROGAZIONE	FIORENZATO A2200209	BRICOLETTA - DUCALE
2	**1250011**	ø 14.6x21 mm	FOR BREW GROUPS - PER GRUPPI EROGAZIONE	FIORENZATO A2200192	BRICOLETTA - DUCALE
3	**1250537**	ø 14x45 mm	FOR BREW GROUPS - PER GRUPPI EROGAZIONE	FIORENZATO A2200177	BRICOLETTA - DUCALE
4	**1250113**	ø 49/35 mm - 160/142 mm	FOR BREW GROUPS - PER GRUPPI EROGAZIONE	FIORENZATO A2200242	PIAZZA SAN MARCO

MOLLE FRACINO
SPRINGS FRACINO
FEDER FRACINO
MUELLES FRACINO

1

2

3

Photo	LF Code	Dimensions	Notes	Suitable for	For machine model
1	**1250361**	ø 10.5x32 mm	FOR STEAM/WATER TAPS - PER RUBINETTI VAPORE/ACQUA	FRACINO FC222U	BAMBINO
2	**1250359**	ø 10.7x23.5 mm	FOR WATER/STEAM PIPES - PER TUBI ACQUA/VAPORE	FRACINO FC222C	BAMBINO - CHERUB
3	**1250360**	ø 33x32 mm	FOR KNOBS - PER MANOPOLE	FRACINO FC222N	BAMBINO

MOLLE FUTURA
SPRINGS FUTURA
FEDER FUTURA
MUELLES FUTURA

1

2

Photo	LF Code	Dimensions	Notes	Suitable for	For machine model
1	**1250202**	ø 8x30 mm	FOR INLET TAPS - PER RUBINETTI CARICO	FUTURA 200146	F100
2	**1250415**	ø 10x32 mm	FOR STEAM/WATER TAPS - PER RUBINETTI VAPORE/ACQUA	FUTURA 200155	F100

MOLLE FUTURMAT
SPRINGS FUTURMAT
FEDER FUTURMAT
RESORTES FUTURMAT

1 2 3 4 5 6

Photo	LF Code	Dimensions	Notes	Suitable for	For machine model
1	**1250402**	ø 7x28 mm	FOR BREW GROUPS - PER GRUPPI EROGAZIONE	FUTURMAT 07507304	RIMINI
2	**1250112**	ø 8x20 mm	FOR BREW GROUPS - PER GRUPPI EROGAZIONE	FUTURMAT 0212703	PALANCA
3	**1250511**	ø 8x20 mm	FOR BREW GROUPS - PER GRUPPI EROGAZIONE	FUTURMAT 02446409	ARIETE - E61
4	**1250202**	ø 8x30 mm	FOR INLET TAPS - PER RUBINETTI CARICO	FUTURMAT 01720606	ARIETE - RIMINI
5	**1250415**	ø 10x32 mm	FOR STEAM/WATER TAPS - PER RUBINETTI VAPORE/ACQUA	FUTURMAT 10391803	PALANCA - E61
6	**1250549**	ø 11x25 mm	FOR STEAM/WATER TAPS - PER RUBINETTI VAPORE/ACQUA	FUTURMAT 08165300	ARIETE - RIMINI

MOLLE FUTURMAT
SPRINGS FUTURMAT
FEDER FUTURMAT
RESORTES FUTURMAT

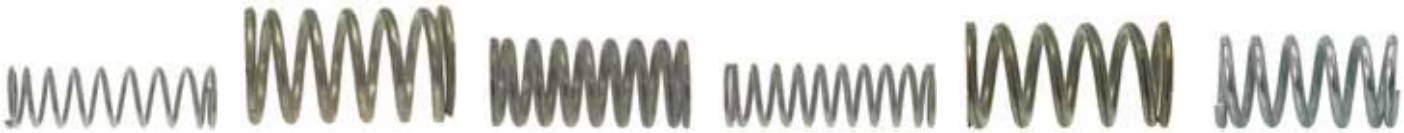

1 2 3 4 5 6

Photo	LF Code	Dimensions	Notes	Suitable for	For machine model
1	**1250536**	ø 13x42 mm	FOR BREW GROUPS - PER GRUPPI EROGAZIONE	FUTURMAT 02318400	ARIETE - E61
2	**1250160**	ø 14x23 mm	FOR BREW GROUPS - PER GRUPPI EROGAZIONE	FUTURMAT 02250801	PALANCA
3	**1250515**	ø 14x33 mm	FOR BREW GROUPS - PER GRUPPI EROGAZIONE	FUTURMAT 01784909	ARIETE - E61
4	**1250537**	ø 14x45 mm	FOR BREW GROUPS - PER GRUPPI EROGAZIONE	FUTURMAT 02054609	ARIETE - E61
5	**1250517**	ø 15.5x29 mm	FOR INLET TAPS - PER RUBINETTI CARICO	FUTURMAT 00109108	ARIETE - RIMINI
6	**1250516**	ø 15x28 mm	FOR BREW GROUPS - PER GRUPPI EROGAZIONE	FUTURMAT 01854306	ARIETE - E61

MOLLE FUTURMAT
SPRINGS FUTURMAT
FEDERN FUTURMAT
MUELLES FUTURMAT

1 2 3

Photo	LF Code	Dimensions	Notes	Suitable for	For machine model
1	**1250510**	ø 29x30 mm	FOR STEAM/WATER TAPS - PER RUBINETTI VAPORE/ACQUA	FUTURMAT 08018707	ARIETE - F3 - RIMINI
2	**1250179**	ø 34x34 mm	FOR STEAM/WATER TAPS - PER RUBINETTI VAPORE/ACQUA	FUTURMAT 10907509	CUSTOM - E61 - PALANCA
3	**1250407**	ø 46x170 mm	FOR BREW GROUPS - PER GRUPPI EROGAZIONE	FUTURMAT 02241206	PALANCA

MOLLE GAGGIA
SPRINGS GAGGIA
FEDER GAGGIA
RESORTES GAGGIA

1

2

3

4

5

Photo	LF Code	Dimensions	Notes	Suitable for	For machine model
1	**5060579**	---	FOR BREW GROUPS - PER GRUPPI EROGAZIONE	GAGGIA 9161.378	ACCADEMIA - TITANIUM
2	**1250369**	---	FOR BREW GROUPS - PER GRUPPI EROGAZIONE	GAGGIA 11001556	ACCADEMIA - TITANIUM
3	**5059829**	44 mm	FOR BREW GROUPS - PER GRUPPI EROGAZIONE	GAGGIA 9161.046	ACCADEMIA - TITANIUM
4	**1250239**	---	FOR COFFEE HOPPER - PER CONTENITORE CAFFE	GAGGIA 11001693	CAPPUCCINO XTWO
5	**5071472**	---	FOR STEAM/WATER TAPS - PER RUBINETTI VAPORE/ ACQUA	GAGGIA WGARB0693	SYNCRONY - TITANIUM

MOLLE GAGGIA
SPRINGS GAGGIA
FEDER GAGGIA
RESORTES GAGGIA

1

2

3

4

5

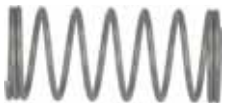
6

Photo	LF Code	Dimensions	Notes	Suitable for	For machine model
1	**5500664**	ø 3.8x16 mm	FOR BREW GROUPS - PER GRUPPI EROGAZIONE	GAGGIA 9161.045	SYNCRONY DIGITAL - SYNCRONY LOGIC
2	**1250238**	ø 4x21 mm	FOR STEAM/WATER TAPS - PER RUBINETTI VAPORE/ACQUA	GAGGIA 126765317	TITANIUM
3	**1250901**	ø 4x29 mm	FOR BOILER VALVE - PER VALVOLA CALDAIA	GAGGIA 9011.132	ACCADEMIA - TITANIUM - UNICA
4	**5031970**	ø 7x21 mm	FOR MUSHROOM VALVE - PER VALVOLA A FUNGO	GAGGIA 126761518	CAREZZA DELUXE
5	**1250367**	ø 7.6x17 mm	FOR MUSHROOM VALVE - PER VALVOLA A FUNGO	GAGGIA EF0013	GRAN GAGGIA
6	**1250378**	ø 8.2x18.8 mm	FOR WATER CONTAINER - PER CONTENITORE ACQUA	GAGGIA 11003672	BRERA - CAREZZA DELUXE - NAVIGLIO

MOLLE GAGGIA
SPRINGS GAGGIA
FEDER GAGGIA
RESORTES GAGGIA

1

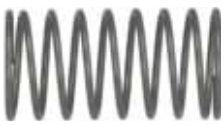
2

3

4

5

6

Photo	LF Code	Dimensions	Notes	Suitable for	For machine model
1	**1250236**	ø 9x21 mm	FOR STEAM/WATER TAPS - PER RUBINETTI VAPORE/ACQUA	GAGGIA 11000759	CAPPUCCINO XTWO
2	**5073339**	ø 10x19 mm	FOR WATER CONTAINER - PER CONTENITORE ACQUA	GAGGIA 126764718	ACCADEMIA - SYNCRONY LOGIC
3	**1250534**	ø 12x22 mm	FOR WATER/STEAM PIPES - PER TUBI ACQUA/VAPORE	GAGGIA WGARB0882	DECO - FD2000 - FE2000
4	**1250536**	ø 13x42 mm	FOR INLET TAPS - PER RUBINETTI CARICO	GAGGIA WGA40010890	DECO - GD - GE
5	**5073717**	ø 14x28 mm	FOR BREW GROUPS - PER GRUPPI EROGAZIONE	GAGGIA 9161.198	ACCADEMIA - TITANIUM
6	**1250417**	ø 26x14 mm	FOR WATER/STEAM PIPES - PER TUBI ACQUA/VAPORE	GAGGIA WGARB0693	D90 - E90 - TD - TE

MOLLE GAGGIA
SPRINGS GAGGIA
FEDER GAGGIA
RESORTES GAGGIA

1

2

3

Photo	LF Code	Dimensions	Notes	Suitable for	For machine model
1	**1250241**	---	---	GAGGIA 9011.144	ACCADEMIA - BRERA
2	**1250379**	---	---	GAGGIA 11001499	PLATINUM EVENT - UNICA
3	**1250206**	---	FOR STEAM/WATER TAPS - PER RUBINETTI VAPORE/ACQUA	GAGGIA RB0816	FD2000 - FE2000 - TD - TE

MOLLE GAGGIA SPAGNA
SPRINGS GAGGIA SPAGNA
FEDER GAGGIA SPAGNA
RESORTES GAGGIA SPAGNA

1

2

3

4

5

6

Photo	LF Code	Dimensions	Notes	Suitable for	For machine model
1	**1250402**	ø 7x28 mm	FOR BREW GROUPS - PER GRUPPI EROGAZIONE	GAGGIA SPAGNA 07507304	NERA
2	**1250112**	ø 8x20 mm	FOR BREW GROUPS - PER GRUPPI EROGAZIONE	GAGGIA SPAGNA 02122703	PALANCA
3	**1250202**	ø 8x30 mm	FOR INLET TAPS - PER RUBINETTI CARICO	GAGGIA SPAGNA 01720606	KB - PALANCA
4	**1250415**	ø 10x32 mm	FOR STEAM/WATER TAPS - PER RUBINETTI VAPORE/ACQUA	GAGGIA SPAGNA 10391803	PALANCA
5	**1250549**	ø 11x25 mm	FOR STEAM/WATER TAPS - PER RUBINETTI VAPORE/ACQUA	GAGGIA SPAGNA 08165300	BELLA - G6 - KB
6	**1250536**	ø 13x42 mm	FOR BREW GROUPS - PER GRUPPI EROGAZIONE	GAGGIA SPAGNA 02318400	NERA

MOLLE GAGGIA SPAGNA
SPRINGS GAGGIA SPAGNA
FEDERN GAGGIA SPAGNA
MUELLES GAGGIA SPAGNA

1

2

3

4

5

Photo	LF Code	Dimensions	Notes	Suitable for	For machine model
1	**1250160**	ø 14x23 mm	FOR BREW GROUPS - PER GRUPPI EROGAZIONE	GAGGIA SPAGNA 02250801	PALANCA
2	**1250517**	ø 15.5x29 mm	FOR INLET TAPS - PER RUBINETTI CARICO	GAGGIA SPAGNA 00109108	BELLA - G6 - KB
3	**1250510**	ø 29x30 mm	FOR STEAM/WATER TAPS - PER RUBINETTI VAPORE/ACQUA	GAGGIA SPAGNA 08018707	BELLA
4	**1250179**	ø 34x34 mm	FOR STEAM/WATER TAPS - PER RUBINETTI VAPORE/ACQUA	GAGGIA SPAGNA 10907509	PALANCA
5	**1250407**	ø 46x170 mm	FOR BREW GROUPS - PER GRUPPI EROGAZIONE	GAGGIA SPAGNA 02241206	PALANCA

MOLLE GRIMAC
SPRINGS GRIMAC
FEDER GRIMAC
RESORTES GRIMAC

1 2 3 4 5 6

Photo	LF Code	Dimensions	Notes	Suitable for	For machine model
1	**1250286**	ø 7.5x24 mm	FOR MUSHROOM VALVE - PER VALVOLA A FUNGO	GRIMAC 1180100001-MG015/1	OPALE - TERRY
2	**1250202**	ø 8x30 mm	FOR STEAM/WATER TAPS - PER RUBINETTI VAPORE/ACQUA	GRIMAC GR359	ZOLAII
3	**1250071**	ø 8x32 mm	FOR INLET TAPS - PER RUBINETTI CARICO	GRIMAC 1180100081-FS214	G10 - MIA
4	**1250547**	ø 11.5x16 mm	FOR WATER/STEAM PIPES - PER TUBI ACQUA/VAPORE	GRIMAC 1180100012-AS035	ECLISSE - MIA
5	**1250365**	ø 11.5x30 mm	FOR STEAM/WATER TAPS - PER RUBINETTI VAPORE/ACQUA	GRIMAC 1180100097-GR362	ZOLAII
6	**1250203**	ø 11x30 mm	FOR STEAM/WATER TAPS - PER RUBINETTI VAPORE/ACQUA	GRIMAC 1180100035-C295	G10

MOLLE GRIMAC
SPRINGS GRIMAC
FEDER GRIMAC
RESORTES GRIMAC

1 2 3 4 5 6

Photo	LF Code	Dimensions	Notes	Suitable for	For machine model
1	**1250157**	ø 12.5x30 mm	FOR STEAM/WATER TAPS - PER RUBINETTI VAPORE/ACQUA	GRIMAC GR742	ECLISSE - TEN
2	**1250151**	ø 12x15 mm	FOR STEAM/WATER TAPS - PER RUBINETTI VAPORE/ACQUA	GRIMAC A2200001	G11
3	**1250536**	ø 13x42 mm	FOR BREW GROUPS - PER GRUPPI EROGAZIONE	GRIMAC 1180100053-GR780	ECLISSE - TEN
4	**1250656**	ø 14.5x35 mm	FOR BREW GROUPS - PER GRUPPI EROGAZIONE	GRIMAC 1180100054-GR760	ECLISSE - TEN
5	**1250521**	ø 15x18 mm	FOR STEAM/WATER TAPS - PER RUBINETTI VAPORE/ACQUA	GRIMAC GR799	ECLISSE - TEN
6	**1250516**	ø 15x28 mm	FOR BREW GROUPS - PER GRUPPI EROGAZIONE	GRIMAC 1180100193-GR788	ECLISSE - TWENTY - ZOLAI - ZOLAII

MOLLE ISOMAC
SPRINGS ISOMAC
FEDER ISOMAC
MUELLES ISOMAC

1 2 3 4

Photo	LF Code	Dimensions	Notes	Suitable for	For machine model
1	**1250364**	ø 7.2x21 mm	FOR BREW GROUPS - PER GRUPPI EROGAZIONE	ISOMAC IS000804	GIADA - MAVERICK
2	**1250536**	ø 13x42 mm	FOR BREW GROUPS - PER GRUPPI EROGAZIONE	ISOMAC ISMOLLA-A	MILLENNIUM - MONDIALE - TEA - ZAFFIRO
3	**1250515**	ø 14x33 mm	FOR BREW GROUPS - PER GRUPPI EROGAZIONE	ISOMAC ISMOL311420R1	MILLENNIUM - MONDIALE - TEA - ZAFFIRO
4	**1250516**	ø 15x28 mm	FOR BREW GROUPS - PER GRUPPI EROGAZIONE	ISOMAC ISMOLLA-E	MILLENNIUM - MONDIALE - TEA - ZAFFIRO

MOLLE ITALCREM
SPRINGS ITALCREM
FEDER ITALCREM
RESORTES ITALCREM

1 2 3 4 5 6

Photo	LF Code	Dimensions	Notes	Suitable for	For machine model
1	**1250402**	ø 7x28 mm	FOR BREW GROUPS - PER GRUPPI EROGAZIONE	ITALCREM 07507304	CAPRI
2	**1250112**	ø 8x20 mm	FOR BREW GROUPS - PER GRUPPI EROGAZIONE	ITALCREM 02122703	PALANCA
3	**1250202**	ø 8x30 mm	FOR INLET TAPS - PER RUBINETTI CARICO	ITALCREM 01720606	IT4 - PALANCA
4	**1250415**	ø 10x32 mm	FOR STEAM/WATER TAPS - PER RUBINETTI VAPORE/ACQUA	ITALCREM 10391803	PALANCA
5	**1250549**	ø 11x25 mm	FOR STEAM/WATER TAPS - PER RUBINETTI VAPORE/ACQUA	ITALCREM 08165300	IT4 - PALANCA
6	**1250536**	ø 13x42 mm	FOR BREW GROUPS - PER GRUPPI EROGAZIONE	ITALCREM 02318400	CAPRI

MOLLE ITALCREM
SPRINGS ITALCREM
FEDERN ITALCREM
MUELLES ITALCREM

1 2 3 4 5

Photo	LF Code	Dimensions	Notes	Suitable for	For machine model
1	**1250160**	ø 14x23 mm	FOR BREW GROUPS - PER GRUPPI EROGAZIONE	ITALCREM 02250801	PALANCA
2	**1250517**	ø 15.5x29 mm	FOR INLET TAPS - PER RUBINETTI CARICO	ITALCREM 00109108	IT4
3	**1250510**	ø 29x30 mm	FOR STEAM/WATER TAPS - PER RUBINETTI VAPORE/ACQUA	ITALCREM 08018707	IT4
4	**1250179**	ø 34x34 mm	FOR STEAM/WATER TAPS - PER RUBINETTI VAPORE/ACQUA	ITALCREM 10907509	PALANCA
5	**1250407**	ø 46x170 mm	FOR BREW GROUPS - PER GRUPPI EROGAZIONE	ITALCREM 02241206	PALANCA

MOLLE LAVAZZA
SPRINGS LAVAZZA
FEDER LAVAZZA
RESORTES LAVAZZA

1 2 3 4 5 6

Photo	LF Code	Dimensions	Notes	Suitable for	For machine model
1	**1250536**	ø 13x42 mm	FOR INLET TAP - PER RUBINETTI CARICO	LAVAZZA 10061896	LB4800
2	**1250368**	ø 10x10 mm	FOR BREW GROUP - PER GRUPPI EROGAZIONE	LAVAZZA 10066197	LB2800 - LB4100 - LB4103 - LB4700 - LB4700R - LB4701R
3	**1250001**	ø 11,4x18 mm	FOR STEAM PIPE - PER TUBI VAPORE	LAVAZZA 10066308	LB2800 - LB4100 - LB4103 - LB4700 - LB4712
4	**1250151**	ø 12x15 mm	FOR STEAM PIPE - PER TUBI VAPORE	LAVAZZA 10084149	LB4600
5	**1250534**	ø 12x22 mm	FOR STEAM PIPE - PER TUBI VAPORE	LAVAZZA 10062055	LB4800
6	**1250372**	ø 11,5x16 mm	FOR STEAM PIPE - PER TUBI VAPORE	LAVAZZA 10066324	LB4700 - LB4700R - LB4701R

MOLLE MAIRALI
SPRINGS MAIRALI
FEDER MAIRALI
RESORTES MAIRALI

1 2 3 4 5 6

Photo	LF Code	Dimensions	Notes	Suitable for	For machine model
1	**1250402**	ø 7x28 mm	FOR BREW GROUPS - PER GRUPPI EROGAZIONE	MAIRALI 07507304	GIULIETTA
2	**1250112**	ø 8x20 mm	FOR BREW GROUPS - PER GRUPPI EROGAZIONE	MAIRALI 02122703	PALANCA
3	**1250202**	ø 8x30 mm	FOR INLET TAPS - PER RUBINETTI CARICO	MAIRALI 01720606	ARIANNE - PALANCA
4	**1250415**	ø 10x32 mm	FOR STEAM/WATER TAPS - PER RUBINETTI VAPORE/ACQUA	MAIRALI 10391803	PALANCA
5	**1250549**	ø 11x25 mm	FOR STEAM/WATER TAPS - PER RUBINETTI VAPORE/ACQUA	MAIRALI 08165300	ARIANNE - PALANCA
6	**1250536**	ø 13x42 mm	FOR BREW GROUPS - PER GRUPPI EROGAZIONE	MAIRALI 02318400	GIULIETTA

MOLLE MAIRALI
SPRINGS MAIRALI
FEDERN MAIRALI
MUELLES MAIRALI

1 2 3 4 5

Photo	LF Code	Dimensions	Notes	Suitable for	For machine model
1	**1250160**	ø 14x23 mm	FOR BREW GROUPS - PER GRUPPI EROGAZIONE	MAIRALI 02250801	PALANCA
2	**1250517**	ø 15.5x29 mm	FOR INLET TAPS - PER RUBINETTI CARICO	MAIRALI 00109108	ARIANNE
3	**1250510**	ø 29x30 mm	FOR STEAM/WATER TAPS - PER RUBINETTI VAPORE/ACQUA	MAIRALI 08018707	ARIANNE
4	**1250179**	ø 34x34 mm	FOR STEAM/WATER TAPS - PER RUBINETTI VAPORE/ACQUA	MAIRALI 10907509	PALANCA
5	**1250407**	ø 46x170 mm	FOR BREW GROUPS - PER GRUPPI EROGAZIONE	MAIRALI 02241206	PALANCA

MOLLE MARZOCCO
SPRINGS MARZOCCO
FEDER MARZOCCO
RESORTES MARZOCCO

1 2 3 4 5 6

Photo	LF Code	Dimensions	Notes	Suitable for	For machine model
1	**1250219**	ø 10.5x37 mm	FOR THERMOSTATIC VALVE - PER VALVOLA TERMOSTATICA	MARZOCCO F.3.002	FB80 - GB5
2	**1250415**	ø 10x32 mm	FOR STEAM/WATER TAPS - PER RUBINETTI VAPORE/ACQUA	MARZOCCO L165/4	FB70 - LINEA
3	**1250380**	ø 12x29.5 mm	FOR STEAM/WATER TAPS - PER RUBINETTI VAPORE/ACQUA	MARZOCCO F.3.005.01	GB5 - FB80
4	**1250026**	ø 12x31 mm	FOR STEAM/WATER TAPS - PER RUBINETTI VAPORE/ACQUA	MARZOCCO F.3.005	FB80 - GB5
5	**1250516**	ø 15x28 mm	FOR WATER/STEAM PIPES - PER TUBI ACQUA/VAPORE	MARZOCCO F.3.004	FB80 - GB5
6	**1250417**	ø 26x14 mm	FOR WATER/STEAM PIPES - PER TUBI ACQUA/VAPORE	MARZOCCO L165/1	FB70 - LINEA

MOLLE MCE
SPRINGS MCE
FEDER MCE
RESORTES MCE

1

Photo	LF Code	Dimensions	Notes	Suitable for	For machine model
1	**1250372**	ø 11.5x16 mm	FOR WATER/STEAM PIPES - PER TUBI ACQUA/VAPORE	MCE 10452	START

MOLLE NUOVA SIMONELLI
SPRINGS NUOVA SIMONELLI
FEDER NUOVA SIMONELLI
MUELLES NUOVA SIMONELLI

1

2

3

4

Photo	LF Code	Dimensions	Notes	Suitable for	For machine model
1	**1250318**	ø 8x14.5 mm	FOR MUSHROOM VALVE - PER VALVOLA A FUNGO	NUOVA SIMONELLI 08000062	JAZZ
2	**1250531**	ø 11.5x25 mm	FOR STEAM/WATER TAPS - PER RUBINETTI VAPORE/ACQUA	NUOVA SIMONELLI 08000005	AURELIA - APPIA
3	**1250019**	ø 12x16.5 mm	FOR STEAM/WATER TAPS - PER RUBINETTI VAPORE/ACQUA	NUOVA SIMONELLI 08000049	AURELIA II
4	**1250532**	ø 20.4x15.9x16.5 mm	FOR STEAM/WATER TAPS - PER RUBINETTI VAPORE/ACQUA	NUOVA SIMONELLI 08000013	OPTIMA - PREMIER

MOLLE ORCHESTRALE
SPRINGS ORCHESTRALE
FEDER ORCHESTRALE
MUELLES ORCHESTRALE

1

2

Photo	LF Code	Dimensions	Notes	Suitable for	For machine model
1	**1250001**	ø 11,4x18 mm	FOR WATER/STEAM PIPES - PER TUBI ACQUA/VAPORE	ORCHESTRALE D10465	ETNICA - PHONICA
2	**1250372**	ø 11,4x16 mm	FOR WATER/STEAM PIPES - PER TUBI ACQUA/VAPORE	ORCHESTRALE D10465	ETNICA - PHONICA

MOLLE PAVONI
SPRINGS PAVONI
FEDER PAVONI
MUELLES PAVONI

1 2 3 4 5 6

Photo	LF Code	Dimensions	Notes	Suitable for	For machine model
1	**1250286**	ø 7.5x24 mm	FOR MUSHROOM VALVE - PER VALVOLA A FUNGO	PAVONI 0R1134002W	MICROPOD
2	**1250042**	ø 7x26 mm	FOR BOILER SAFETY VALVES - PER VALVOLA SICUREZZA BOILER	PAVONI 311407	EUROPICCOLA
3	**1250415**	ø 10x32 mm	FOR STEAM/WATER TAPS - PER RUBINETTI VAPORE/ACQUA	PAVONI 311427	BAR - PUB
4	**1250534**	ø 12x22 mm	FOR STEAM/WATER TAPS - PER RUBINETTI VAPORE/ACQUA	PAVONI 311409	BAR - PUB
5	**1250536**	ø 13x42 mm	FOR INLET TAPS - PER RUBINETTI CARICO	PAVONI 311419	BAR - PUB
6	**1250158**	ø 14x28 mm	FOR STEAM/WATER TAPS - PER RUBINETTI VAPORE/ACQUA	PAVONI 311408	P1 - P3

MOLLE PAVONI
SPRINGS PAVONI
FEDERN PAVONI
MUELLES PAVONI

1 2 3 4 5

Photo	LF Code	Dimensions	Notes	Suitable for	For machine model
1	**1250537**	ø 14x45 mm	FOR BREW GROUPS - PER GRUPPI EROGAZIONE	PAVONI 311420	BAR - PUB
2	**1250516**	ø 15x28 mm	FOR BREW GROUPS - PER GRUPPI EROGAZIONE	PAVONI 311421	BAR - PUB
3	**1250501**	ø 46x141 mm	FOR BREW GROUPS - PER GRUPPI EROGAZIONE	PAVONI 311428	BAR - PUB
4	**5031970**	ø 7x21 mm	FOR MUSHROOM VALVE - PER VALVOLA A FUNGO	PAVONI 0P126761518	ESPRESSO INN - ESPRESSO SI - EUROBAR
5	**1250241**	ø 4 mm	---	PAVONI 0P9011144	---

MOLLE PROMAC
SPRINGS PROMAC
FEDER PROMAC
MUELLES PROMAC

1 2 3 4 5 6

Photo	LF Code	Dimensions	Notes	Suitable for	For machine model
1	**1250225**	ø 7x27 mm	FOR BREW GROUPS - PER GRUPPI EROGAZIONE	PROMAC 80230070	GREEN - COMPACT
2	**1250028**	ø 10x26 mm	FOR INLET TAPS - PER RUBINETTI CARICO	PROMAC 39110064	GREEN - COMPACT
3	**1250224**	ø 12x12 mm	FOR WATER/STEAM PIPES - PER TUBI ACQUA/VAPORE	PROMAC 39110038	GREEN - COMPACT
4	**1250030**	ø 11x20 mm	FOR INLET TAPS - PER RUBINETTI CARICO	PROMAC 39110040	GREEN - COMPACT
5	**1250026**	ø 12x31 mm	FOR STEAM/WATER TAPS - PER RUBINETTI VAPORE/ACQUA	PROMAC 39110035	GREEN - COMPACT
6	**1250820**	---	FOR KNOBS - PER MANOPOLE	PROMAC 32210001	GREEN - COMPACT

MOLLE RANCILIO
SPRINGS RANCILIO
FEDER RANCILIO
MUELLES RANCILIO

1 2 3 4 5

Photo	LF Code	Dimensions	Notes	Suitable for	For machine model
1	**1523674**	ø 6x28 mm	FOR BREW GROUPS - PER GRUPPI EROGAZIONE	RANCILIO 39110065	Z9 - Z11 - S10
2	**1250040**	ø 8x55 mm	FOR INLET TAPS - PER RUBINETTI CARICO	RANCILIO 39110060	CLASSE10 - Z11
3	**1250029**	ø 10x13/27 mm	FOR BREW GROUPS - PER GRUPPI EROGAZIONE	RANCILIO 39220030	CLASSE10
4	**1250028**	ø 10x26 mm	FOR INLET TAPS - PER RUBINETTI CARICO	RANCILIO 39110064	EPOCA - S20 - Z11
5	**1250810**	ø 10x31/45 mm	FOR BREW GROUPS - PER GRUPPI EROGAZIONE	RANCILIO 39220010	Z11

MOLLE RANCILIO
SPRINGS RANCILIO
FEDER RANCILIO
MUELLES RANCILIO

1 2 3 4 5 6

Photo	LF Code	Dimensions	Notes	Suitable for	For machine model
1	**1250151**	ø 12x15 mm	FOR WATER/STEAM PIPES - PER TUBI ACQUA/VAPORE	RANCILIO 39110025	CLASSE10 - Z11
2	**1250030**	ø 11x20 mm	FOR INLET TAPS - PER RUBINETTI CARICO	RANCILIO 39110040	S20 - Z11
3	**1250816**	ø 12x22 mm	FOR BREW GROUPS - PER GRUPPI EROGAZIONE	RANCILIO 39110030	CLASSE10 - Z11
4	**1250026**	ø 12x31 mm	FOR STEAM/WATER TAPS - PER RUBINETTI VAPORE/ACQUA	RANCILIO 39110035	CLASSE10 - EPOCA
5	**1250812**	ø 13x64 mm	FOR BREW GROUPS - PER GRUPPI EROGAZIONE	RANCILIO 39220025	CLASSE10 - Z11
6	**1250808**	ø 14x23/40 mm	FOR BREW GROUPS - PER GRUPPI EROGAZIONE	RANCILIO 39210005	Z11

MOLLE RANCILIO
SPRINGS RANCILIO
FEDERN RANCILIO
MUELLES RANCILIO

1 2 3 4

Photo	LF Code	Dimensions	Notes	Suitable for	For machine model
1	**1250819**	ø 16x30 mm	FOR BREW GROUPS - PER GRUPPI EROGAZIONE	RANCILIO 39110010	CLASSE10 - S20 - Z11
2	**1250806**	ø 17.2x13 mm	FOR LEVEL - PER LIVELLO	RANCILIO 39110012	MILLENNIUM - S20 - Z11
3	**1250817**	ø 17x39 mm	FOR BREW GROUPS - PER GRUPPI EROGAZIONE	RANCILIO 39110072	CLASSE10 - S20 - Z11
4	**1250801**	ø 4x168 mm	FOR BREW GROUPS - PER GRUPPI EROGAZIONE	RANCILIO 39120014	CLASSE6 LEVA

MOLLE RDL
SPRINGS RDL
FEDER RDL
MUELLES RDL

1

Photo	LF Code	Dimensions	Notes	Suitable for	For machine model
1	**1250286**	ø 7.5x24 mm	FOR MUSHROOM VALVE - PER VALVOLA A FUNGO	RDL 1134002W	MAXI - MINI - SWEET

MOLLE RENEKA
SPRINGS RENEKA
FEDER RENEKA
MUELLES RENEKA

1

2

3

4

Photo	LF Code	Dimensions	Notes	Suitable for	For machine model
1	**1250415**	ø 10x32 mm	FOR STEAM/WATER TAPS - PER RUBINETTI VAPORE/ACQUA	RENEKA 9007705	PLUS - PRESTIGE
2	**1250011**	ø 14.6x21 mm	FOR BREW GROUPS - PER GRUPPI EROGAZIONE	RENEKA	ATALANTE - AMICI
3	**1250515**	ø 14x33 mm	FOR BREW GROUPS - PER GRUPPI EROGAZIONE	RENEKA AT7479944	ATALANTE - AMICI
4	**1250537**	ø 14x45 mm	FOR BREW GROUPS - PER GRUPPI EROGAZIONE	RENEKA AT7479936	ATALANTE - AMICI

MOLLE ROYAL
SPRINGS ROYAL
FEDER ROYAL
MUELLES ROYAL

1

2

3

4

5

6

Photo	LF Code	Dimensions	Notes	Suitable for	For machine model
1	**1250536**	ø 13x42 mm	FOR BREW GROUPS - PER GRUPPI EROGAZIONE	ROYAL 0530030	DIADEMA - SYNCHRO
2	**1250515**	ø 14x33 mm	FOR BREW GROUPS - PER GRUPPI EROGAZIONE	ROYAL 0530045	DIADEMA - SYNCHRO
3	**1250537**	ø 14x45 mm	FOR BREW GROUPS - PER GRUPPI EROGAZIONE	ROYAL 0530030	DIADEMA - SYNCHRO
4	**1250516**	ø 15x28 mm	FOR BREW GROUPS - PER GRUPPI EROGAZIONE	ROYAL 0530095	DIADEMA - SYNCHRO
5	**1250354**	ø 49x150 mm	FOR BREW GROUPS - PER GRUPPI EROGAZIONE	ROYAL	VALLELUNGA LEVA
6	**1250355**	ø 34x142 mm	FOR BREW GROUPS - PER GRUPPI EROGAZIONE	ROYAL	VALLELUNGA LEVA

MOLLE ROYAL
SPRINGS ROYAL
FEDER ROYAL
MUELLES ROYAL

1

2

3

Photo	LF Code	Dimensions	Notes	Suitable for	For machine model
1	**1250415**	ø 10x32 mm	FOR STEAM/WATER TAPS - PER RUBINETTI VAPORE/ACQUA	ROYAL 0540070	DIADEMA - SYNCHRO
2	**1250202**	ø 8x30 mm	FOR INLET TAPS - PER RUBINETTI CARICO	ROYAL 0510160	DIADEMA - SYNCHRO
3	**1250157**	ø 12,5x30 mm	FOR INLET TAPS - PER RUBINETTI CARICO	ROYAL 0510110	DIADEMA - SYNCHRO

MOLLE SAB ITALIA
SPRINGS SAB ITALIA
FEDER SAB ITALIA
MUELLES SAB ITALIA

1

2

Photo	LF Code	Dimensions	Notes	Suitable for	For machine model
1	**1250074**	ø 10.5x27 mm	FOR STEAM/WATER TAPS - PER RUBINETTI VAPORE/ACQUA	SAB ITALIA SVTMM024	ELLIPSE - MODERNA
2	**1250548**	ø 11x58 mm	FOR BREW GROUPS - PER GRUPPI EROGAZIONE	SAB ITALIA SVMNM008	ELLIPSE

MOLLE SAECO
SPRINGS SAECO
FEDER SAECO
MUELLES SAECO

1

2

3

4

5

6

Photo	LF Code	Dimensions	Notes	Suitable for	For machine model
1	**5500664**	ø 3,8x16 mm	FOR BREW GROUPS - PER GRUPPI EROGAZIONE	SAECO 9161.045	MAGIC - ROYAL NEW - ROYAL PROFESSIONAL
2	**1250238**	ø 4x21 mm	FOR STEAM/WATER TAPS - PER RUBINETTI VAPORE/ACQUA	SAECO 126765317	INCANTO - VIENNA
3	**1250289**	ø 4x22 mm	FOR STEAM/WATER TAPS - PER RUBINETTI VAPORE/ACQUA	SAECO 126762518	SUPERAUTOMATICA
4	**1250901**	ø 4x29 mm	FOR BOILER VALVE - PER VALVOLA CALDAIA	SAECO 9011.132	INCANTO - ODEA - PRIMEA
5	**5031970**	ø 7x21 mm	FOR MUSHROOM VALVE - PER VALVOLA A FUNGO	SAECO 126761518	ARMONIA - AROMA - VIAVENETO - VIAVENEZIA
6	**1250367**	ø 7,6x17 mm	FOR MUSHROOM VALVE - PER VALVOLA A FUNGO	SAECO EF0013	POEMIA

MOLLE SAECO
SPRINGS SAECO
FEDERN SAECO
MUELLES SAECO

1 2 3 4 5 6

Photo	LF Code	Dimensions	Notes	Suitable for	For machine model
1	**1250237**	ø 7/4x35 mm	FOR BREW GROUPS - PER GRUPPI EROGAZIONE	SAECO 9161.222	MAGIC - ROYAL - VIENNA
2	**1250378**	ø 8,2x18,8 mm	FOR WATER CONTAINER - PER CONTENITORE ACQUA	SAECO 11003672	INCANTO NEW - INTELIA - MOLTIO - NINA
3	**1250236**	ø 9x21 mm	FOR STEAM/WATER TAPS - PER RUBINETTI VAPORE/ACQUA	SAECO 11000759	PRIMEA
4	**5073339**	ø 10x19 mm	FOR WATER CONTAINER - PER CONTENITORE ACQUA	SAECO 126764718	EXPRELIA - GRAN CREMA - ROYAL NEW
5	**1250534**	ø 12x22 mm	FOR STEAM/WATER TAPS - PER RUBINETTI VAPORE/ACQUA	SAECO WGARB0882	AROMA
6	**1250536**	ø 13x42 mm	FOR INLET TAPS - PER RUBINETTI CARICO	SAECO WGA40010890	AROMA

MOLLE SAECO
SPRINGS SAECO
FEDER SAECO
MUELLES SAECO

1 2 3 4

Photo	LF Code	Dimensions	Notes	Suitable for	For machine model
1	**5073717**	ø 14x28 mm	FOR BREW GROUPS - PER GRUPPI EROGAZIONE	SAECO 9161.198	EXPRELIA - INTELIA - MOLTIO - ROYAL NEW
2	**5060579**	---	FOR BREW GROUPS - PER GRUPPI EROGAZIONE	SAECO 9161.378	EXPRELIA - INTELIA - MOLTIO - SYNTIA - XELSIS
3	**5059829**	44 mm	FOR BREW GROUPS - PER GRUPPI EROGAZIONE	SAECO 9161.046	EXPRELIA - INTELIA - ROYAL - ROYAL NEW
4	**1250369**	---	FOR BREW GROUPS - PER GRUPPI EROGAZIONE	SAECO 11001556	EXPRELIA - INTELIA - MOLTIO - ROYAL NEW

MOLLE SAECO
SPRINGS SAECO
FEDER SAECO
MUELLES SAECO

1 2 3 4 5

Photo	LF Code	Dimensions	Notes	Suitable for	For machine model
1	**5071472**	---	FOR STEAM PIPE - PER TUBO VAPORE	SAECO WGARB0693	INCANTO - ODEA - ROYAL NEW - TALEA
2	**3250215**	11.9x8.1 mm	FOR KNOB - PER MANOPOLA	SAECO DM0814	POEMIA
3	**1250239**	---	FOR COFFEE HOPPER - PER CONTENITORE CAFFE	SAECO 11001693	PRIMEA
4	**1250241**	ø 4 mm	---	SAECO 9011.144	AROMA - CAFECREMA
5	**1250379**	---	---	SAECO 11001499	ODEA GIRO - ODEA GO - TALEA GIRO

MOLLE SAN MARCO
SPRINGS SAN MARCO
FEDER SAN MARCO
MUELLES SAN MARCO

1

2

3

4

5

6

Photo	LF Code	Dimensions	Notes	Suitable for	For machine model
1	**1250041**	ø 10x28 mm	FOR INLET TAPS - PER RUBINETTI CARICO	SAN MARCO 200049	85 - 95 - 100 - 105
2	**1250541**	ø 12x15 mm	FOR WATER/STEAM PIPES - PER TUBI ACQUA/VAPORE	SAN MARCO 200051	85 - 95 - 100 - 105
3	**1250234**	ø 14.5x20 mm	FOR INLET TAPS - PER RUBINETTI CARICO	SAN MARCO 200150	LEVA - 105 - 85
4	**1250436**	ø 14x12 mm	FOR BREW GROUPS - PER GRUPPI EROGAZIONE	SAN MARCO 200003	FCS
5	**1250542**	ø 15x20 mm	FOR INLET TAPS - PER RUBINETTI CARICO	SAN MARCO 200034	LEVA - 85 - 95
6	**1250543**	ø 16x20 mm	FOR STEAM/WATER TAPS - PER RUBINETTI VAPORE/ACQUA	SAN MARCO 200033	85 - 95 - 100 - 105

MOLLE SAN MARCO
SPRINGS SAN MARCO
FEDERN SAN MARCO
MUELLES SAN MARCO

1

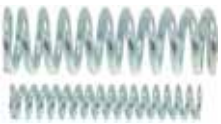
2

Photo	LF Code	Dimensions	Notes	Suitable for	For machine model
1	**1250437**	ø 16x21 mm	FOR STEAM/WATER TAPS - PER RUBINETTI VAPORE/ACQUA	SAN MARCO 200026	85 - 95 - 100 - 105
2	**1250113**	ø 49/35x160/142 mm	FOR BREW GROUPS - PER GRUPPI EROGAZIONE	SAN MARCO 200036	LEVA

MOLLE SANREMO
SPRINGS SANREMO
FEDER SANREMO
MUELLES SANREMO

1

2

Photo	LF Code	Dimensions	Notes	Suitable for	For machine model
1	**1250415**	ø 10x32 mm	FOR BREW GROUPS - PER GRUPPI EROGAZIONE	SANREMO 10402014	AMALFI - CAPRI
2	**1250019**	ø 12x16.5 mm	FOR WATER/STEAM PIPES - PER TUBI ACQUA/VAPORE	SANREMO 10402043	AMALFI - CAPRI

MOLLE SCALA
SPRINGS SCALA
FEDER SCALA
MUELLES SCALA

1 2 3 4 5 6

Photo	LF Code	Dimensions	Notes	Suitable for	For machine model
1	**1250011**	ø 14.6x21 mm	FOR BREW GROUPS - PER GRUPPI EROGAZIONE	SCALA C-0034	BUTTERFLY - EROICA
2	**1250515**	ø 14x33 mm	FOR BREW GROUPS - PER GRUPPI EROGAZIONE	SCALA C-0039	BUTTERFLY - EROICA
3	**1250537**	ø 14x45 mm	FOR BREW GROUPS - PER GRUPPI EROGAZIONE	SCALA C-0043	BUTTERFLY - EROICA
4	**1250548**	ø 11x58 mm	FOR BREW GROUPS - PER GRUPPI EROGAZIONE	SCALA C-0311	CARMEN
5	**1250151**	ø 12x15 mm	FOR WATER/STEAM PIPES - PER TUBI ACQUA/VAPORE	SCALA C-0273	BUTTERFLY - EROICA
6	**1250362**	ø 10,8x30 mm	FOR WATER/STEAM PIPES - PER TUBI ACQUA/VAPORE	SCALA C-0174	EROICA

MOLLE SCALA
SPRINGS SCALA
FEDER SCALA
MUELLES SCALA

1 2 3 4

Photo	LF Code	Dimensions	Notes	Suitable for	For machine model
1	**1250202**	ø 8x30 mm	FOR STEAM/WATER TAPS - PER RUBINETTI VAPORE/ACQUA	SCALA C-0169	EROICA
2	**1250415**	ø 10x32 mm	FOR STEAM/WATER TAPS - PER RUBINETTI VAPORE/ACQUA	SCALA C-0181	BUTTERFLY - EROICA - IRIS - NORMA
3	**1250157**	ø 12,5x30 mm	FOR STEAM/WATER TAPS - PER RUBINETTI VAPORE/ACQUA	SCALA C-0168	CARMAN - EROICA - NORMA
4	**1250521**	ø 15x17 mm	FOR STEAM/WATER TAPS - PER RUBINETTI VAPORE/ACQUA	SCALA C-0159	EROICA

MOLLE SPAZIALE
SPRINGS SPAZIALE
FEDER SPAZIALE
MUELLES SPAZIALE

1 2 3 4 5 6

Photo	LF Code	Dimensions	Notes	Suitable for	For machine model
1	**1250182**	ø 6.5x13 mm	FOR HYDRAULIC SYSTEM - PER IMPIANTO IDRAULICO	SPAZIALE 01625	S1 - S2 - S3 - S40 - S5 - S8 - S9
2	**1250202**	ø 8x30 mm	FOR HYDRAULIC SYSTEM - PER IMPIANTO IDRAULICO	SPAZIALE 00279	S1 - S2 - S3 - S40 - S5 - S8 - S9
3	**1250102**	ø 12x16 mm	FOR WATER/STEAM PIPES - PER TUBI ACQUA/VAPORE	SPAZIALE 05327	SELETRON PLUS
4	**1250019**	ø 12x16.5 mm	FOR WATER/STEAM PIPES - PER TUBI ACQUA/VAPORE	SPAZIALE 07568	S1 - S2 - S3 - S40 - S5 - S8 - S9
5	**1250190**	ø 13.5x26 mm	FOR STEAM/WATER TAPS - PER RUBINETTI VAPORE/ACQUA	SPAZIALE 00223	S1 - S2 - S3 - S5 - S8 - S9
6	**1250187**	ø 13x26 mm	FOR STEAM/WATER TAPS - PER RUBINETTI VAPORE/ACQUA	SPAZIALE 08693	S1 - S40 - S5 COMPACT - S9

MOLLE SPAZIALE
SPRINGS SPAZIALE
FEDERN SPAZIALE
MUELLES SPAZIALE

1 2 3

Photo	LF Code	Dimensions	Notes	Suitable for	For machine model
1	**1250521**	ø 15x17 mm	FOR WATER/STEAM PIPES - PER TUBI ACQUA/VAPORE	SPAZIALE 00522	NEW - RAPID - SPAZIO
2	**1250192**	ø 22x40 mm	FOR INLET TAPS - PER RUBINETTI CARICO	SPAZIALE 01624	NEW - RAPID - SPAZIO
3	**1250189**	ø 26.5x56 mm	FOR BREW GROUPS - PER GRUPPI EROGAZIONE	SPAZIALE 00484	S2 - S3 - S40 - S8 - S9

MOLLE VIBIEMME
SPRINGS VIBIEMME
FEDER VIBIEMME
MUELLES VIBIEMME

1 2 3 4 5 6

Photo	LF Code	Dimensions	Notes	Suitable for	For machine model
1	**1250202**	ø 8x30 mm	FOR STEAM/WATER TAPS - PER RUBINETTI VAPORE/ACQUA	VIBIEMME MOLLSF	CHIMAERA - REPLICA
2	**1250348**	ø 10.5x29.3 mm	FOR WATER/STEAM PIPES - PER TUBI ACQUA/VAPORE	VIBIEMME MOLLTUVA	EVOLUTION - KOMETA
3	**1250415**	ø 10x32 mm	FOR STEAM/WATER TAPS - PER RUBINETTI VAPORE/ACQUA	VIBIEMME MOLLAASTARUBK	EVOLUTION - KOMETA
4	**1250362**	ø 10.8x30 mm	FOR WATER/STEAM PIPES - PER TUBI ACQUA/VAPORE	VIBIEMME MOLTUVA	CHIMAERA - REPLICA
5	**1250157**	ø 12.5x30 mm	FOR STEAM/WATER TAPS - PER RUBINETTI VAPORE/ACQUA	VIBIEMME MOLLVALVRUBME	KOMETA - MERCURY
6	**1250151**	ø 12x15 mm	FOR WATER/STEAM PIPES - PER TUBI ACQUA/VAPORE	VIBIEMME MOLLASNODORKO	KOMETA

MOLLE VIBIEMME
SPRINGS VIBIEMME
FEDER VIBIEMME
MUELLES VIBIEMME

1 2 3 4 5 6

Photo	LF Code	Dimensions	Notes	Suitable for	For machine model
1	**1250356**	ø 13x27 mm	FOR STEAM/WATER TAPS - PER RUBINETTI VAPORE/ACQUA	VIBIEMME MOLLARUVAPLO	LOLLO
2	**1250536**	ø 13x42 mm	FOR BREW GROUPS - PER GRUPPI EROGAZIONE	VIBIEMME MOLLVAER	DOMOBARSUPER - REPLICA
3	**1250349**	ø 14.5x28 mm	FOR INLET TAPS - PER RUBINETTI CARICO	VIBIEMME MOLLAASTESPRE	CHIMAERA - REPLICA
4	**1250515**	ø 14x33 mm	FOR INLET TAPS - PER RUBINETTI CARICO	VIBIEMME MOLLSC	MERCURY - REPLICA
5	**1250537**	ø 14x45 mm	FOR BREW GROUPS - PER GRUPPI EROGAZIONE	VIBIEMME MOLLVAIN	DOMOBARSUPER - REPLICA
6	**1250521**	ø 15x17 mm	FOR STEAM/WATER TAPS - PER RUBINETTI VAPORE/ACQUA	VIBIEMME MOLLPGRUBACVA	CHIMAERA - REPLICA

MOLLE VIBIEMME
SPRINGS VIBIEMME
FEDERN VIBIEMME
MUELLES VIBIEMME

1 2 3

Photo	LF Code	Dimensions	Notes	Suitable for	For machine model
1	**1250516**	ø 15x28 mm	FOR BREW GROUPS - PER GRUPPI EROGAZIONE	VIBIEMME MOLLPRGO	DOMOBARSUPER - REPLICA
2	**1250354**	ø 49x150 mm	FOR BREW GROUPS - PER GRUPPI EROGAZIONE	VIBIEMME MOLLAGRANDEPI	REPLICA
3	**1250355**	ø 34x142 mm	FOR BREW GROUPS - PER GRUPPI EROGAZIONE	VIBIEMME MOLLAPICCOLPI	REPLICA

MOLLE VICTORIA ARDUINO
SPRINGS VICTORIA ARDUINO
FEDER VICTORIA ARDUINO
MUELLES VICTORIA ARDUINO

1 2 3 4

Photo	LF Code	Dimensions	Notes	Suitable for	For machine model
1	**1250318**	ø 8x14.5 mm	FOR HYDRAULIC SYSTEM - PER IMPIANTO IDRAULICO	VICTORIA ARDUINO 08000062	VENUSCENTURY
2	**1250531**	ø 11.5x25 mm	FOR STEAM/WATER TAPS - PER RUBINETTI VAPORE/ACQUA	VICTORIA ARDUINO 08000005	ADONIS - VENUSCENTURY
3	**1250019**	ø 12x16.5 mm	FOR WATER/STEAM PIPES - PER TUBI ACQUA/VAPORE	VICTORIA ARDUINO 08000027	ATHENA - VENUSCENTURY
4	**1250501**	ø 46x141 mm	FOR BREW GROUPS - PER GRUPPI EROGAZIONE	VICTORIA ARDUINO 17000020	ATHENA LEVA

MOLLE VISACREM
SPRINGS VISACREM
FEDER VISACREM
MUELLES VISACREM

1 2 3 4 5 6

Photo	LF Code	Dimensions	Notes	Suitable for	For machine model
1	**1250402**	ø 7x28 mm	FOR BREW GROUPS - PER GRUPPI EROGAZIONE	VISACREM 07507304	NERA
2	**1250112**	ø 8x20 mm	FOR BREW GROUPS - PER GRUPPI EROGAZIONE	VISACREM 02122703	PALANCA
3	**1250202**	ø 8x30 mm	FOR INLET TAPS - PER RUBINETTI CARICO	VISACREM 01720606	NERA - PALANCA
4	**1250415**	ø 10x32 mm	FOR STEAM/WATER TAPS - PER RUBINETTI VAPORE/ACQUA	VISACREM 10391803	PALANCA
5	**1250549**	ø 11x25 mm	FOR STEAM/WATER TAPS - PER RUBINETTI VAPORE/ACQUA	VISACREM 08165300	NERA - PALANCA
6	**1250536**	ø 13x42 mm	FOR BREW GROUPS - PER GRUPPI EROGAZIONE	VISACREM 02318400	BARVA

MOLLE VISACREM
SPRINGS VISACREM
FEDER VISACREM
MUELLES VISACREM

1 2 3 4 5

Photo	LF Code	Dimensions	Notes	Suitable for	For machine model
1	**1250160**	ø 14x23 mm	FOR BREW GROUPS - PER GRUPPI EROGAZIONE	VISACREM 02250801	PALANCA
2	**1250517**	ø 15.5x29 mm	FOR INLET TAPS - PER RUBINETTI CARICO	VISACREM 00109108	NERA
3	**1250510**	ø 29x30 mm	FOR STEAM/WATER TAPS - PER RUBINETTI VAPORE/ACQUA	VISACREM 08018707	NERA
4	**1250179**	ø 34x34 mm	FOR STEAM/WATER TAPS - PER RUBINETTI VAPORE/ACQUA	VISACREM 10907509	PALANCA
5	**1250407**	ø 46x170 mm	FOR BREW GROUPS - PER GRUPPI EROGAZIONE	VISACREM 02241206	PALANCA

MOLLE WEGA
SPRINGS WEGA
FEDER WEGA
MUELLES WEGA

1 2 3 4 5 6

Photo	LF Code	Dimensions	Notes	Suitable for	For machine model
1	**1250372**	ø 11.5x16 mm	FOR WATER/STEAM PIPES - PER TUBI ACQUA/VAPORE	WEGA WY10465	AIRY - ATLAS
2	**1250536**	ø 13x42 mm	FOR BREW GROUPS - PER GRUPPI EROGAZIONE	WEGA WY27421001	AIRY - ATLAS
3	**1250515**	ø 14x33 mm	FOR BREW GROUPS - PER GRUPPI EROGAZIONE	WEGA WY27421003	AIRY - ATLAS
4	**1250546**	ø 14x44 mm	FOR INLET TAPS - PER RUBINETTI CARICO	WEGA WY10451	COLOSSEUM - ESPRESSA
5	**1250537**	ø 14x45 mm	FOR BREW GROUPS - PER GRUPPI EROGAZIONE	WEGA WY27421002	AIRY - ATLAS
6	**1250516**	ø 15x28 mm	FOR BREW GROUPS - PER GRUPPI EROGAZIONE	WEGA WY27421004	AIRY - ATLAS

MOLLE WEGA
SPRINGS WEGA
FEDERN WEGA
MUELLES WEGA

1 2 3

Photo	LF Code	Dimensions	Notes	Suitable for	For machine model
1	**1250001**	ø 11.4x18 mm	FOR WATER/STEAM PIPES - PER TUBI ACQUA/VAPORE	WEGA WY10465	COLOSSEUM - ESPRESSA - SPHERA - VELA
2	**1250501**	ø 46x141 mm	FOR BREW GROUPS - PER GRUPPI EROGAZIONE	WEGA WY27250	AIRY - ATLAS
3	**1250332**	9x12 mm	FOR KNOBS - PER MANOPOLE	WEGA WY10459	---

MOLLE FERMAFILTRO
FILTER LOCKING SPRING
SIEBTRÄGERFEDER
MUELLE PORTAFILTRO

1 2 3 4 5

Photo	LF Code	wire ø (mm)	Suitable for
1	**1250101**	1.00	ALL BRANDS - TUTTI I MARCHI
1	**1250002**	1.20	ALL BRANDS - TUTTI I MARCHI
1	**1250333**	1.30	ALL BRANDS - TUTTI I MARCHI
1	**1250338**	1.40	ALL BRANDS - TUTTI I MARCHI
2	**1250279**	1.40	ASTORIA/CMA P4Y - WEGA CONCEPT 52
3	**5033397**	1.00	PAVONI EUROPICCOLA
4	**1250018**	1.00	ELEKTRA MICROCASA
5	**1250366**	1.00	LAVAZZA LB2800 - LB4103 - LB4700 - LB4700R - LB4701R

The most extensive offer of spare parts for:

Professional espresso coffee machines

MOTORI ASTORIA/CMA
MOTOR ASTORIA/CMA
MOTOR ASTORIA/CMA
MOTOR ASTORIA/CMA

1

2

3

4

5

Photo	LF Code	Model	Suitable for	For machine model
1	**1240610**	C013728 - 120W 230V 50Hz 1.15A	ASTORIA/CMA 18303	CK - CKE - CKX - CKXE - PRATIC - PRATIC NEW
2	**1240702**	11002728 - 165W 220V 50Hz	ASTORIA/CMA 18300	ACCESSORY - ACCESSORIO
3	**1240703**	11002755 - 165W 220V 50Hz	ASTORIA/CMA 18301	ACCESSORY - ACCESSORIO
4	**1240606**	C042300 - 310W 110/120V 50/60Hz	ASTORIA/CMA 56407	ARGENTA - DIVINA - DORA - GLORIA - GLORIA R12 - TANYA
5	**1240607**	C042204 - 330W 220/240V 50/60Hz 1.6/1.4A	ASTORIA/CMA 56406	ARGENTA - DIVINA - DORA - GLORIA - GLORIA R12 - TANYA

MOTORI BEZZERA
MOTORS BEZZERA
MOTOREN BEZZERA
MOTORES BEZZERA

1

Photo	LF Code	Model	Suitable for	For machine model
1	**1240707**	C0137.80 - 120W 230V 50/60Hz	BEZZERA 7742202	BZ35 - BZ40 - B2000 - B2006 - B2009COMPACT - B3000

MOTORI BFC
MOTORS BFC
MOTOREN BFC
MOTORES BFC

1

Photo	LF Code	Model	Suitable for	For machine model
1	**1240365**	128P - 180W 220/240V 50/60Hz 1,7/1,9A	BFC 5001139	CLASSICA - DELUX - GALILEO - IMOLA - LIRA - MARANELLO - MONZA

MOTORI BRASILIA
MOTORS BRASILIA
MOTOREN BRASILIA
MOTORES BRASILIA

1

2

3

Photo	LF Code	Model	Suitable for	For machine model
1	**1240702**	11002728 - 165W 220V 50Hz	BRASILIA 00600.4.00.08	CADETTA - CENTURY - GRADISCA - PORTOFINO - ROMA
2	**1240602**	11053704 - 330W 220/240V 50/60Hz	BRASILIA 99006.4.00.08	---
3	**1240601**	11053600 - 330W 110/120V 60Hz	BRASILIA	---

MOTORI CASADIO
MOTORS CASADIO
MOTOREN CASADIO
MOTORES CASADIO

1

2

Photo	LF Code	Model	Suitable for	For machine model
1	**1240296**	YSC102/60-4 - 150W 220/240V 50/60Hz	CASADIO 530298120	DIECIA - DIECIS - DODICIA - DODICIS - VENTI
2	**1240295**	YSC102/6-4 - 150W 220/240V 50/60Hz	CASADIO 530299600	DIECIA - DIECIS

MOTORI CIMBALI
MOTORS CIMBALI
MOTOREN CIMBALI
MOTORES CIMBALI

1

2

3

4

Photo	LF Code	Model	Suitable for	For machine model
1	**1240702**	11002728 - 165W 220V 50Hz	CIMBALI 530-296-900	M20 - M27 - M30
2	**1240181**	C0111 - 275W 208/240V 1.3A 50/60Hz	CIMBALI 530-295-400	M21COMPACT - M21JUNIOR - M29COMPACT - M30 - M31
3	**1240296**	YSC102/60-4 - 150W 220/240V 50/60Hz	CIMBALI 530-298-120	M24 - M39GT
4	**1240295**	YSC102/6-4 - 150W 220/240V 50/60Hz	CIMBALI 530-299-600	M39

MOTORI DELONGHI
MOTORS DELONGHI
MOTOREN DELONGHI
MOTORES DELONGHI

1

2

3

4

5

6

Photo	LF Code	Model	Suitable for	For machine model
1	**1240377**	230V 50Hz	DELONGHI 7313226111	ESAM5400
2	**D212004**	230V 50Hz	DELONGHI 7313226071	ESAM2800.SB EX:1
3	**D212005**	230V 50Hz	DELONGHI 7313225991	ESAM3500.S - ESAM5500.S EX:2
4	**D212001**	230V 50Hz	DELONGHI 7313225981	ECAM21.117 - ECAM22.110 - ECAM22.320 - ECAM23.120 -ECAM23.210
5	**D212002**	230V 50Hz	DELONGHI 7313226021	ESAM5400 - ESAM5450 - ESAM5600 - ESAM5700 - ESAM6700 - ESAM6700
6	**D212003**	230V 50Hz	DELONGHI 7313225951	ECAM22.360 - ECAM23.460 - ECAM25.452 - ECAM26.455 - ECAM28.465

MOTORI DELONGHI
MOTORS DELONGHI
MOTOREN DELONGHI
MOTORES DELONGHI

1

2

Photo	LF Code	Model	Suitable for	For machine model
1	**1240389**	230V 50Hz	DELONGHI 7313239391	ECAM250.75.MS - ECAM650.55.MS - ECAM656.55.MS - ECAM510.55.M
2	**1240376**	230V 50Hz	DELONGHI 7313217261	ECAM23.210.W - ESAM3200 - ESAM3500 - ESAM4400 - ESAM5400 - ESAM6600

MOTORI EXPOBAR
MOTORS EXPOBAR
MOTOREN EXPOBAR
MOTORES EXPOBAR

1

Photo	LF Code	Model	Suitable for	For machine model
1	**1240123**	180W 230V 50/60HZ	EXPOBAR 60000016	CARAT - DIAMANT - EB61 - ELEN - G10 - MARKUS

MOTORI FAEMA
MOTORS FAEMA
MOTOREN FAEMA
MOTORES FAEMA

1

2

3

4

5

6

Photo	LF Code	Model	Suitable for	For machine model
1	**1240702**	11002728 - 165W 220V 50Hz	FAEMA 530296900	E98COMPACT
2	**1240181**	C0111 - 275W 208/240V 1.3A 50/60Hz	FAEMA 530295400	E98COMPACT
3	**1240701**	11039002 - 150W 220V 50Hz	FAEMA 2441133416	DUE - EMBLEMA - ENOVA - E91 - E92 ELITE
4	**1240295**	YSC102/6-4 - 150W 220/240V 50/60Hz	FAEMA 530299600	ELITE
5	**1240296**	YSC102/60-4 - 150W 220/240V 50/60Hz	FAEMA 530298120	EMBLEMA - EMBLEMA RESTYLING - TEOREMA
6	**1240711**	170W 220V 50/60Hz	FAEMA 2441116600	COMPACT - EXPRESS - SPECIAL

MOTORI FIORENZATO CS
MOTORS FIORENZATO CS
MOTOREN FIORENZATO CS
MOTORES FIORENZATO CS

1

Photo	LF Code	Model	Suitable for	For machine model
1	**1240072**	150W 230V 1.2A 50/60Hz	FIORENZATO A1900087	ACCADEMIA - BRICOLETTA - DUCALE - FENICE - LIDO - MURANO

MOTORI FUTURMAT
MOTORS FUTURMAT
MOTOREN FUTURMAT
MOTORES FUTURMAT

1

Photo	LF Code	Model	Suitable for	For machine model
1	**1240702**	11002728 - 165W 220V 50Hz	FUTURMAT 08174104	ARIETE - E61 - RIMINI

MOTORI GAGGIA
MOTORS GAGGIA
MOTOREN GAGGIA
MOTORES GAGGIA

1

2

3

4

5

6

Photo	LF Code	Model	Suitable for	For machine model
1	**1240368**	11062503 - 165W 230V 1.3A 50/60Hz	GAGGIA WGA5001017000	DECO - GD - GE - XD - XE
2	**5052316**	230VDC	GAGGIA 9140.005.00A	SYNCRONY DIGITAL
3	**1240211**	230VDC	GAGGIA 9141.075.00A	SYNCRONY COMPACT - TITANIUM
4	**5030350**	230VDC	GAGGIA 11000513	ACCADEMIA - BRERA - PLATINUM VISION - UNICA
5	**7102191**	---	GAGGIA 11005214	ACCADEMIA - CAPPUCCINO XTWO - PLATINUM - UNICA
6	**5086238**	---	GAGGIA 11005131	SYNCRONY LOGIC

MOTORI GAGGIA SPAGNA
MOTORS GAGGIA SPAGNA
MOTOREN GAGGIA SPAGNA
MOTORES GAGGIA SPAGNA

1

Photo	LF Code	Model	Suitable for	For machine model
1	**1240702**	11002728 - 165W 220V 50Hz	GAGGIA SPAGNA 08174104	NERA

MOTORI GRIMAC
MOTORS GRIMAC
MOTOREN GRIMAC
MOTORES GRIMAC

1

2

3

4

Photo	LF Code	Model	Suitable for	For machine model
1	**1240072**	150W 230V 1.2A 50/60Hz	GRIMAC A1900087	ECLISSE - G10 - G11 - TEN - TWENTY
2	**1240702**	11002728 - 165W 220V 50Hz	GRIMAC 1190100001-GR813	G10
3	**1240703**	11002755 - 165W 220V 50Hz	GRIMAC 1190100004-GR172	ZOLAI - ZOLAII
4	**1240602**	11053704 - 330W 220/240V 50/60Hz	GRIMAC 1190100004-GR172	ZOLAI - ZOLAII

MOTORI ITALCREM
MOTORS ITALCREM
MOTOREN ITALCREM
MOTORES ITALCREM

1

Photo	LF Code	Model	Suitable for	For machine model
1	**1240702**	11002728 - 165W 220V 50Hz	ITALCREM 08174104	CAPRI

MOTORI JURA
MOTORS JURA
MOTOREN JURA
MOTORES JURA

1

2

3

Photo	LF Code	Model	Suitable for	For machine model
1	**1122015**	12/24V	JURA 69075	X5 - Z5 - Z7 - Z9
2	**1340001**	12V	JURA 61786	C5 - C50 - C55 - C60 - C65 - C70 - C75 - C9 - C90 - E10 - E20
3	**5087642**	120VDC	JURA 71205	---

MOTORI LAVAZZA
MOTORS LAVAZZA
MOTOREN LAVAZZA
MOTORES LAVAZZA

1

2

Photo	LF Code	Model	Suitable for	For machine model
1	**1240368**	11062503 - 165W 230V 50/60Hz	LAVAZZA 10060658	LB4800
2	**1240607**	C042204 - 330W 220/240V 50/60Hz 1.6/1.4A	LAVAZZA 10066259	LB4700 - LB4700R - LB4701R

MOTORI MAIRALI
MOTORS MAIRALI
MOTOREN MAIRALI
MOTORES MAIRALI

1

Photo	LF Code	Model	Suitable for	For machine model
1	**1240702**	11002728 - 165W 220V 50Hz	MAIRALI 08174104	GIULIETTA

MOTORI MCE
MOTORS MCE
MOTOREN MCE
MOTORES MCE

1

Photo	LF Code	Model	Suitable for	For machine model
1	**1240610**	C013728 - 120W 230V 50Hz 1.15A	MCE 18303	START

MOTORI NUOVA SIMONELLI
MOTORS NUOVA SIMONELLI
MOTOREN NUOVA SIMONELLI
MOTORES NUOVA SIMONELLI

1

2

Photo	LF Code	Model	Suitable for	For machine model
1	**1240065**	C004320 - 120W 230V 50/60Hz	NUOVA SIMONELLI 04500033	APPIA - APPIA COMPACT - PREMIER
2	**1240282**	11002708 - 165W 220/230V 50/60Hz	NUOVA SIMONELLI 04500034	APPIA - AURELIA - AURELIAII - MAC 2000 - OPTIMA

MOTORI ORCHESTRALE
MOTORS ORCHESTRALE
MOTOREN ORCHESTRALE
MOTORES ORCHESTRALE

1

2

3

Photo	LF Code	Model	Suitable for	For machine model
1	**1240610**	C013728 - 120W 230V 50Hz 1.15A	ORCHESTRALE D18303	ETNICA - PHONICA
2	**1240606**	C042300 - 310W 110/120V 50/60Hz	ORCHESTRALE D56407	ETNICA - PHONICA
3	**1240607**	C042204 - 330W 220/240V 50/60Hz 1.6/1.4A	ORCHESTRALE D56406	ETNICA - PHONICA

MOTORI PAVONI
MOTORS PAVONI
MOTOREN PAVONI
MOTORES PAVONI

1

2

Photo	LF Code	Model	Suitable for	For machine model
1	**1240212**	C0137.43 - 100W 230V 50/60Hz 0.95A	PAVONI 451039	BAR - BART - CAFE
2	**1240702**	11002728 - 165W 220V 50Hz	PAVONI 451041	---

MOTORI RENEKA
MOTORS RENEKA
MOTOREN RENEKA
MOTORES RENEKA

1

Photo	LF Code	Model	Suitable for	For machine model
1	**1240707**	C0137.80 - 120W 230V 50/60Hz	RENEKA 9007902	LC - VIVA - VIVAS

MOTORI ROYAL
MOTORS ROYAL
MOTOREN ROYAL
MOTORES ROYAL

1

Photo	LF Code	Model	Suitable for	For machine model
1	**1240365**	128P - 180W 220/240V 50/60Hz 1,7/1,9A	ROYAL 5001139	DIADEMA - SYNCHRO - TECNICA - VALLELUNGA

MOTORI SAECO
MOTORS SAECO
MOTOREN SAECO
MOTORES SAECO

1

2

3

4

5

Photo	LF Code	Model	Suitable for	For machine model
1	**1240368**	11062503 - 165W 230V 1.3A 50/60Hz	SAECO WGA5001017000	AROMA
2	**1252602**	230VDC	SAECO 0301.R10.00A	MAGICCOMFORT - ROYALCOFFEEBAR - ROYALPROFESSIONAL
3	**1240211**	230VDC	SAECO 286851858	CAFECREMA - CAFENOVA - EASY - INCANTO - TREVI
4	**5023828**	230VDC	SAECO 9140.036.00A	ROYAL - ROYAL DIGITA - ROYAL NEW - ROYAL OFFICE - ROYAL PROFESSIONAL
5	**5052316**	230VDC	SAECO 9140.005.00A	MAGIC - ROYAL - ROYAL OFFICE - ROYAL PROFESSIONAL - STRATOS

MOTORI SAECO
MOTORS SAECO
MOTOREN SAECO
MOTORES SAECO

1

2

3

Photo	LF Code	Model	Suitable for	For machine model
1	**5030350**	230V	SAECO 11000513	ODEA - TALEA
2	**1240078**	230V	SAECO 20000202	INCANTO
3	**7102191**	---	SAECO 11005214	EXPRELIA - INTELIA - MAGIC - MOLTIO - PRINCESS - ROYAL - ROYAL NEW

MOTORI SAN MARCO
MOTORS SAN MARCO
MOTOREN SAN MARCO
MOTORES SAN MARCO

1

Photo	LF Code	Model	Suitable for	For machine model
1	**1240706**	C0084.06 - 300W 230V 50Hz	SAN MARCO 108201	LEVA - NEW 105 - PREZIOSA - 100 - 105 - 85 - 95

MOTORI SANREMO
MOTORS SANREMO
MOTOREN SANREMO
MOTORES SANREMO

1

2

Photo	LF Code	Model	Suitable for	For machine model
1	**1240708**	C010709 - 150W 230V 50/60Hz	SANREMO 10252080A	AMALFI - CAPRI - MILANO LX - PISA - TORINO - VENEZIA
2	**1240702**	11002728 - 165W 230V 50/60Hz	SANREMO 10252086	AMALFI - MILANO LX - PISA - TORINO - VENEZIA - VERONA

MOTORI VIBIEMME
MOTORS VIBIEMME
MOTOREN VIBIEMME
MOTORES VIBIEMME

1

2

Photo	LF Code	Model	Suitable for	For machine model
1	**1240375**	C004311 - 100W 220/230V 50/60Hz	VIBIEMME ELETMOTRPM304	CHIMAERA - CUBO - DOMOBARSUPER - DOSAPLUS - EVOLUTION
2	**1240702**	11002728 - 165W 220V 50Hz	VIBIEMME ELETMOT22	CHIMAERA - CUBO - DOSAPLUS - EVOLUTION - KOMETA

MOTORI VICTORIA ARDUINO
MOTORS VICTORIA ARDUINO
MOTOREN VICTORIA ARDUINO
MOTORES VICTORIA ARDUINO

1

2

Photo	LF Code	Model	Suitable for	For machine model
1	**1240065**	C004320 - 120W 230V 50/60Hz	VICTORIA ARDUINO 04500033	ATHENAS
2	**1240282**	11002708 - 165W 220/230V 50/60Hz	VICTORIA ARDUINO 04500034	ADONIS - VENUSBAR

MOTORI VISACREM
MOTORS VISACREM
MOTOREN VISACREM
MOTORES VISACREM

1

Photo	LF Code	Model	Suitable for	For machine model
1	**1240702**	11002728 - 165W 220V 50Hz	VISACREM 08174104	NERA

MOTORI WEGA
MOTORS WEGA
MOTOREN WEGA
MOTORES WEGA

1

2

3

Photo	LF Code	Model	Suitable for	For machine model
1	**1240610**	C013728 - 120W 230V 50Hz 1.15A	WEGA WY18303	AIRY - ATLAS - COMBINOVA - FORMULA MILANO - JUNIOR
2	**1240606**	C042300 - 310W 110/120V 50/60Hz	WEGA WY56407	AIRY - ATLAS - COLOSSEUM - COMBINOVA - ESPRESSA
3	**1240607**	C042204 - 330W 220/240V 50/60Hz 1.6/1.4A	WEGA WY56406	AIRY - ATLAS - COLOSSEUM - COMBINOVA - ESPRESSA

Perni
Pins
Stifte
Pernos

PERNI ASTORIA/CMA
PINS ASTORIA/CMA
STIFTE ASTORIA/CMA
PERNOS ASTORIA/CMA

1

2

3

4

5

Photo	LF Code	Dimensions	Suitable for	Notes	For machine model
1	**1324201**	---	ASTORIA/CMA 27301A	FOR BREW GROUPS - PER GRUPPI EROGAZIONE	RAPALLO AL
2	**1324202**	---	ASTORIA/CMA 27301	FOR BREW GROUPS - PER GRUPPI EROGAZIONE	RAPALLO AL
3	**1324200**	---	ASTORIA/CMA 27302	FOR BREW GROUPS - PER GRUPPI EROGAZIONE	RAPALLO AL
4	**1324077**	---	ASTORIA/CMA 25309	FOR STEAM/WATER TAPS - PER RUBINETTI VAPORE/ACQUA	ARGENTA - DENISE - DORA - LISA
5	**1324076**	ø 8x35.6 mm	ASTORIA/CMA 25315	FOR INLET TAPS - PER RUBINETTI CARICO	ARGENTA - BRAVA - DIVINA - GLORIA

PERNI BEZZERA
PINS BEZZERA
STIFTE BEZZERA
PERNOS BEZZERA

1

2

3

4

Photo	LF Code	Dimensions	Suitable for	Notes	For machine model
1	**1184551**	---	BEZZERA 7479950	FOR BREW GROUPS - PER GRUPPI EROGAZIONE	GALATEA - GALATEADOMUS
2	**1324123**	---	BEZZERA 5220403	FOR STEAM/WATER TAPS - PER RUBINETTI VAPORE/ACQUA	B2000 - B3000
3	**1324168**	ø 11x62 mm	BEZZERA 5220413	FOR STEAM/WATER TAPS - PER RUBINETTI VAPORE/ACQUA	B2000 - B2006
4	**1324102**	---	BEZZERA 5260202	FOR INLET TAPS - PER RUBINETTI CARICO	B2000 - B6000

PERNI BFC
PINS BFC
STIFTE BFC
PERNOS BFC

1

2

3

4

5

6

Photo	LF Code	Dimensions	Suitable for	Notes	For machine model
1	**1324164**	ø 10x40 mm	BFC	FOR BREW GROUPS - PER GRUPPI EROGAZIONE	CLASSICA LEVA
2	**1324048**	---	BFC 0530070	FOR BREW GROUPS - PER GRUPPI EROGAZIONE	CLASSICA - DELUX - GALILEO
3	**1349471**	---	BFC 0540040	FOR STEAM/WATER TAPS - PER RUBINETTI VAPORE/ACQUA	CLASSICA - DELUX - GALILEO
4	**1324066**	---	BFC 0540080	FOR STEAM/WATER TAPS - PER RUBINETTI VAPORE/ACQUA	CLASSICA - DELUX - GALILEO
5	**1324183**	47,5 mm	BFC 0510152	FOR INLET TAPS - PER RUBINETTI CARICO	CLASSICA - DELUX - GALILEO
6	**1324180**	ø 7x47,5 mm	BFC 0510142	FOR INLET TAPS - PER RUBINETTI CARICO	CLASSICA - DELUX - GALILEO

PERNI BIANCHI
PINS BIANCHI
STIFTE BIANCHI
PERNOS BIANCHI

1

Photo	LF Code	Dimensions	Suitable for	Notes	For machine model
1	**1324117**	---	BIANCHI 43144116	FOR BREW GROUPS - PER GRUPPI EROGAZIONE	LUCIA

PERNI BRASILIA
PINS BRASILIA
STIFTE BRASILIA
PERNOS BRASILIA

1

2

3

4

5

Photo	LF Code	Dimensions	Suitable for	Notes	For machine model
1	**1324048**	---	BRASILIA 09320.0.00.04	FOR BREW GROUPS - PER GRUPPI EROGAZIONE	DECURTIS - GRADISCA
2	**1324024**	---	BRASILIA 04091.0.00.04	FOR BREW GROUPS - PER GRUPPI EROGAZIONE	CENTURY RESTYLING - GRADISCA
3	**1324200**	---	BRASILIA 02135.0.00.04	FOR BREW GROUPS - PER GRUPPI EROGAZIONE	DECURTIS AL - PORTOFINO AL
4	**1348348**	---	BRASILIA 02086.0.10.04	FOR STEAM/WATER TAPS - PER RUBINETTI VAPORE/ACQUA	FIRENZE
5	**1225004**	---	BRASILIA 13655.0.10.04	FOR BREW GROUPS - PER GRUPPI EROGAZIONE	DECURTIS - GRADISCA - MINICLASSIC

PERNI CARIMALI
PINS CARIMALI
STIFTE CARIMALI
PERNOS CARIMALI

1

2

3

Photo	LF Code	Dimensions	Suitable for	Notes	For machine model
1	**1324066**	---	CARIMALI	FOR STEAM/WATER TAPS - PER RUBINETTI VAPORE/ACQUA	PRATICA
2	**1324123**	---	CARIMALI	FOR STEAM/WATER TAPS - PER RUBINETTI VAPORE/ACQUA	---
3	**1324016**	---	CARIMALI 14.00846.40	FOR STEAM/WATER TAPS - PER RUBINETTI VAPORE/ACQUA	ECO - ETABETA - UNO

Perni
Pins
Stifte
Pernos

PERNI CASADIO
PINS CASADIO
STIFTE CASADIO
PERNOS CASADIO

1

2

Photo	LF Code	Dimensions	Suitable for	Notes	For machine model
1	**1184019**	---	CASADIO 590791010	FOR STEAM/WATER TAPS - PER RUBINETTI VAPORE/ACQUA	DIECI - DODICI - VENTI
2	**1348111**	---	CASADIO 485910010	FOR STEAM/WATER TAPS - PER RUBINETTI VAPORE/ACQUA	DIECI - DODICI - VENTI

PERNI CIMBALI
PINS CIMBALI
STIFTE CIMBALI
PERNOS CIMBALI

1

2

3

4

5

Photo	LF Code	Dimensions	Suitable for	Notes	For machine model
1	**1324018**	---	CIMBALI 460-112-000	FOR BREW GROUPS - PER GRUPPI EROGAZIONE	M15
2	**1184019**	---	CIMBALI 590-791-010	FOR STEAM/WATER TAPS - PER RUBINETTI VAPORE/ACQUA	M27 2008 - M28 - M30 - M32 - M39
3	**1348111**	---	CIMBALI 485-910-010	FOR STEAM/WATER TAPS - PER RUBINETTI VAPORE/ACQUA	M27 - M27 2008 - M30 - M32 - M39
4	**1348317**	---	CIMBALI 985-710-010	FOR STEAM/WATER TAPS - PER RUBINETTI VAPORE/ACQUA	M27 - M27 2008 - M28 - M30 - M32
5	**1324057**	---	CIMBALI 439-033-000	FOR LEVEL BODYS - PER CORPI LIVELLO	M20 - M27 - M28 - M29 - M30

PERNI DIDIESSE
PINS DIDIESSE
STIFTE DIDIESSE
PERNOS DIDIESSE

1

Photo	LF Code	Dimensions	Suitable for	Notes	For machine model
1	**1324178**	---	DIDIESSE FR010	FOR BOILER BLOCK - PER BLOCCO CALDAIA	FROG

PERNI ECM
PINS ECM
STIFTE ECM
PERNOS ECM

1

2

3

Photo	LF Code	Dimensions	Suitable for	Notes	For machine model
1	**1324048**	---	ECM C219900425	FOR BREW GROUPS - PER GRUPPI EROGAZIONE	GIOTTO - VENEZIANO
2	**1324024**	---	ECM C229900555	FOR BREW GROUPS - PER GRUPPI EROGAZIONE	MICHELANGELO
3	**5029263**	---	ECM	FOR STEAM/WATER TAPS - PER RUBINETTI VAPORE/ACQUA	GIOTTO

PERNI ECM MANUFACTURE
PINS ECM MANUFACTURE
ACHSE ECM MANUFACTURE
PERNOS ECM MANUFACTURE

1

2

3

Photo	LF Code	Dimensions	Suitable for	Notes	For machine model
1	**1324048**	---	ECM MANUFACTURE C219900425	FOR BREW GROUPS - PER GRUPPI EROGAZIONE	CLASSIKA II - MECHANIKA
2	**1324176**	65 mm	ECM MANUFACTURE P6000.4	FOR STEAM/WATER TAPS - PER RUBINETTI VAPORE/ACQUA	CLASSIKA II - MECHANIKA
3	**5052820**	35 mm	ECM MANUFACTURE P6003.3	FOR STEAM/WATER TAPS - PER RUBINETTI VAPORE/ACQUA	ELEKTRONIKA II PROFI

PERNI ELEKTRA
PINS ELEKTRA
STIFTE ELEKTRA
PERNOS ELEKTRA

1

2

Photo	LF Code	Dimensions	Suitable for	Notes	For machine model
1	**1324063**	---	ELEKTRA 01457015	FOR STEAM/WATER TAPS - PER RUBINETTI VAPORE/ACQUA	MODERN - SIXTIES - KAPPA
2	**1348132**	---	ELEKTRA 00048014	FOR STEAM/WATER TAPS - PER RUBINETTI VAPORE/ACQUA	MODERN - CLASSIC - SIXTIES - KAPPA

Perni
Pins
Stifte
Pernos

PERNI EXPOBAR
PINS EXPOBAR
STIFTE EXPOBAR
PERNOS EXPOBAR

1

2

3

4

Photo	LF Code	Dimensions	Suitable for	Notes	For machine model
1	**1324048**	---	EXPOBAR CTAV1-13	FOR BREW GROUPS - PER GRUPPI EROGAZIONE	EB61 - OFFICE
2	**1349471**	---	EXPOBAR 30370010	FOR STEAM/WATER TAPS - PER RUBINETTI VAPORE/ACQUA	ELEN - G10 - MARKUS SILVER
3	**1324066**	---	EXPOBAR 30370050	FOR STEAM/WATER TAPS - PER RUBINETTI VAPORE/ACQUA	ELEN - G10 - MARKUS SILVER
4	**1324033**	6x6 mm M3 H12.1 mm	EXPOBAR 30369151	FOR INLET TAPS - PER RUBINETTI CARICO	EB61

PERNI FAEMA
PINS FAEMA
STIFTE FAEMA
PERNOS FAEMA

1

2

3

4

5

6

Photo	LF Code	Dimensions	Suitable for	Notes	For machine model
1	**1184551**	---	FAEMA 3161136650	FOR BREW GROUPS - PER GRUPPI EROGAZIONE	E61
2	**1250513**	40 mm	FAEMA	FOR BREW GROUPS - PER GRUPPI EROGAZIONE	E61
3	**1324001**	6x6 mm M3 H11.1 mm	FAEMA	FOR BREW GROUPS - PER GRUPPI EROGAZIONE	E61
3	**1324033**	6x6 mm M3 H12.1 mm	FAEMA 903150010	FOR BREW GROUPS - PER GRUPPI EROGAZIONE	E61
4	**1324006**	5x5 mm M4 H40 mm	FAEMA	FOR BREW GROUPS - PER GRUPPI EROGAZIONE	E61
5	**1324007**	6x6 mm M3 H6.5 mm	FAEMA 4161135916	FOR BREW GROUPS - PER GRUPPI EROGAZIONE	E61
6	**1324013**	---	FAEMA	FOR BREW GROUPS - PER GRUPPI EROGAZIONE	E61

PERNI FAEMA
PINS FAEMA
STIFTE FAEMA
PERNOS FAEMA

1

2

3

4

5

Photo	LF Code	Dimensions	Suitable for	Notes	For machine model
1	**1324067**	ø 3x43 mm	FAEMA 4811116465	FOR BREW GROUPS - PER GRUPPI EROGAZIONE	COMPACT - DUEA - EXPRESS
2	**1524067**	---	FAEMA 4811116450	FOR BREW GROUPS - PER GRUPPI EROGAZIONE	COMPACT - DUEA - EXPRESS
3	**1324068**	---	FAEMA 4811116455	FOR BREW GROUPS - PER GRUPPI EROGAZIONE	COMPACT - DUEA - EXPRESS
4	**1324062**	---	FAEMA	FOR BREW GROUPS - PER GRUPPI EROGAZIONE	E64 - E66 - P4 - P6
5	**1324041**	---	FAEMA	FOR INLET TAPS - PER RUBINETTI CARICO	DUE - E91 - E97

PERNI FAEMA
PINS FAEMA
STIFTE FAEMA
PERNOS FAEMA

1

2

3

4

5

6

Photo	LF Code	Dimensions	Suitable for	Notes	For machine model
1	**1349471**	---	FAEMA 4851117523	FOR STEAM/WATER TAPS - PER RUBINETTI VAPORE/ACQUA	COMPACT - EXPRESS - E97
2	**1324066**	---	FAEMA 3811117123	FOR STEAM/WATER TAPS - PER RUBINETTI VAPORE/ACQUA	COMPACT - EXPRESS - E97
3	**1324071**	ø 7 mm - H47.7 mm	FAEMA 4811134603	FOR STEAM/WATER TAPS - PER RUBINETTI VAPORE/ACQUA	DUE - EMBLEMA - ENOVA
4	**1324160**	ø 7.7 mm - H47 mm	FAEMA 930067000	FOR STEAM/WATER TAPS - PER RUBINETTI VAPORE/ACQUA	DUE - EMBLEMA - ENOVA
5	**1324002**	---	FAEMA 4814132319	FOR STEAM/WATER TAPS - PER RUBINETTI VAPORE/ACQUA	DUE - SMART - STYLEMA
6	**1324086**	---	FAEMA 4818135879	FOR STEAM/WATER TAPS - PER RUBINETTI VAPORE/ACQUA	E61

PERNI FAEMA
PINS FAEMA
STIFTE FAEMA
PERNOS FAEMA

1

2

3

4

5

Photo	LF Code	Dimensions	Suitable for	Notes	For machine model
1	**1324026**	---	FAEMA 4811135880	FOR STEAM/WATER TAPS - PER RUBINETTI VAPORE/ACQUA	E61
2	**1184019**	---	FAEMA 590791010	FOR STEAM/WATER TAPS - PER RUBINETTI VAPORE/ACQUA	E61 - E98
3	**1324075**	---	FAEMA 902034000	FOR STEAM/WATER TAPS - PER RUBINETTI VAPORE/ACQUA	E92 COMPACT - ELITE
4	**1348111**	---	FAEMA 485910010	FOR STEAM/WATER TAPS - PER RUBINETTI VAPORE/ACQUA	E98 COMPACT - E98 PRESIDENT
5	**1348317**	---	FAEMA 485751010	FOR STEAM/WATER TAPS - PER RUBINETTI VAPORE/ACQUA	E98 COMPACT - E98 PRESIDENT

PERNI FIAMMA RST
PINS FIAMMA RST
STIFTE FIAMMA RST
PERNOS FIAMMA RST

1

2

3

4

5

6

Photo	LF Code	Dimensions	Suitable for	Notes	For machine model
1	**1324166**	---	FIAMMA 5.0.025.0004	FOR BREW GROUPS - PER GRUPPI EROGAZIONE	PRESTIGE
2	**1324167**	---	FIAMMA 5.0.016.0304	FOR STEAM/WATER TAPS - PER RUBINETTI VAPORE/ACQUA	ATLANTIC - PRESTIGE
3	**1324066**	---	FIAMMA 5.0.016.0308	FOR STEAM/WATER TAPS - PER RUBINETTI VAPORE/ACQUA	ATLANTIC - PRESTIGE
4	**1324170**	68.5 mm	FIAMMA 5.0.002.0111	FOR STEAM/WATER TAPS - PER RUBINETTI VAPORE/ACQUA	MARINA
5	**1324162**	46 mm	FIAMMA 5.0.016.0255	FOR INLET TAPS - PER RUBINETTI CARICO	PRESTIGE
6	**1324169**	37 mm	FIAMMA 5.0.016.0252	FOR INLET TAPS - PER RUBINETTI CARICO	PRESTIGE

Perni
Pins
Stifte
Pernos

PERNI FIORENZATO CS
PINS FIORENZATO CS
STIFTE FIORENZATO CS
PERNOS FIORENZATO CS

1

2

3

Photo	LF Code	Dimensions	Suitable for	Notes	For machine model
1	**1324048**	---	FIORENZATO A2200188	FOR BREW GROUPS - PER GRUPPI EROGAZIONE	BRICOLETTA - COLOMBINA - DUCALE
2	**1324124**	---	FIORENZATO	FOR STEAM/WATER TAPS - PER RUBINETTI VAPORE/ACQUA	FENICE - VENEZIA
3	**5052820**	35 mm	FIORENZATO A2200266	FOR STEAM/WATER TAPS - PER RUBINETTI VAPORE/ACQUA	PIAZZA SAN MARCO

PERNI FRACINO
PINS FRACINO
STIFTE FRACINO
PERNOS FRACINO

1

2

3

4

Photo	LF Code	Dimensions	Suitable for	Notes	For machine model
1	**1324174**	59 mm	FRACINO FC222R	FOR STEAM/WATER TAPS - PER RUBINETTI VAPORE/ACQUA	BAMBINO
2	**1324175**	51 mm	FRACINO FC222RS	FOR STEAM/WATER TAPS - PER RUBINETTI VAPORE/ACQUA	BAMBINO
3	**1324172**	76 mm	FRACINO FC222VS	FOR STEAM/WATER TAPS - PER RUBINETTI VAPORE/ACQUA	CONTEMPO
4	**1324173**	86 mm	FRACINO FC222V	FOR STEAM/WATER TAPS - PER RUBINETTI VAPORE/ACQUA	BAMBINO - CONTEMPO

PERNI FUTURA
PINS FUTURA
STIFTEN FUTURA
PERNOS FUTURA

1

2

Photo	LF Code	Dimensions	Suitable for	Notes	For machine model
1	**1349471**	---	FUTURA 200161	FOR STEAM/WATER TAPS - PER RUBINETTI VAPORE/ACQUA	F100
2	**1324066**	---	FUTURA 200153	FOR STEAM/WATER TAPS - PER RUBINETTI VAPORE/ACQUA	F100

PERNI FUTURMAT
PINS FUTURMAT
STIFTE FUTURMAT
PERNOS FUTURMAT

1

2

3

4

5

6

Photo	LF Code	Dimensions	Suitable for	Notes	For machine model
1	**1324001**	6x6 mm M3 H11.1 mm	FUTURMAT 02211100	FOR BREW GROUPS - PER GRUPPI EROGAZIONE	E61
2	**1324033**	6x6 mm M3 H12.1 mm	FUTURMAT 02211001	FOR BREW GROUPS - PER GRUPPI EROGAZIONE	E61
3	**1324006**	5x5 mm M4 H40 mm	FUTURMAT 02326106	FOR BREW GROUPS - PER GRUPPI EROGAZIONE	E61
4	**1324007**	6x6 mm M3 H6.5 mm	FUTURMAT 02326007	FOR BREW GROUPS - PER GRUPPI EROGAZIONE	E61
5	**1324013**	---	FUTURMAT 02102200	FOR BREW GROUPS - PER GRUPPI EROGAZIONE	E61
6	**1324084**	---	FUTURMAT 08299100	FOR BREW GROUPS - PER GRUPPI EROGAZIONE	E61

PERNI FUTURMAT
PINS FUTURMAT
STIFTE FUTURMAT
PERNOS FUTURMAT

1

2

3

4

5

6

Photo	LF Code	Dimensions	Suitable for	Notes	For machine model
1	**1184551**	---	FUTURMAT 01769702	FOR BREW GROUPS - PER GRUPPI EROGAZIONE	E61 - CUSTOM
2	**1324085**	---	FUTURMAT 08298900	FOR BREW GROUPS - PER GRUPPI EROGAZIONE	RIMINI
3	**1324052**	---	FUTURMAT NT0030	FOR BREW GROUPS - PER GRUPPI EROGAZIONE	RIMINI
4	**1349406**	---	FUTURMAT 07358609	FOR STEAM/WATER TAPS - PER RUBINETTI VAPORE/ACQUA	RIMINI
5	**1324066**	---	FUTURMAT 11156530	FOR STEAM/WATER TAPS - PER RUBINETTI VAPORE/ACQUA	RIMINI
6	**1324015**	---	FUTURMAT 07665508	FOR INLET TAPS - PER RUBINETTI CARICO	RIMINI

PERNI GAGGIA
PINS GAGGIA
STIFTE GAGGIA
PERNOS GAGGIA

1

2

3

4

5

6

Photo	LF Code	Dimensions	Suitable for	Notes	For machine model
1	**5014767**	---	GAGGIA 11009018	FOR STEAM/WATER TAPS - PER RUBINETTI VAPORE/ACQUA	EASY - INCANTO
2	**5027689**	---	GAGGIA S3113034	FOR STEAM/WATER TAPS - PER RUBINETTI VAPORE/ACQUA	G105 - G106
3	**1324901**	---	GAGGIA 11009013	FOR STEAM/WATER TAPS - PER RUBINETTI VAPORE/ACQUA	INCANTO
4	**1324911**	---	GAGGIA 11009019	FOR STEAM/WATER TAPS - PER RUBINETTI VAPORE/ACQUA	INCANTO
5	**1324902**	---	GAGGIA 9011.100	FOR STEAM/WATER TAPS - PER RUBINETTI VAPORE/ACQUA	INCANTO
6	**5060578**	---	GAGGIA 11005113	FOR BOILER - PER CALDAIA	PLATINUM SWING

PERNI GAGGIA
PINS GAGGIA
STIFTE GAGGIA
PERNOS GAGGIA

1

2

3

Photo	LF Code	Dimensions	Suitable for	Notes	For machine model
1	**1324092**	---	GAGGIA S3140463	FOR BREW GROUPS - PER GRUPPI EROGAZIONE	G105 - G106
2	**5069081**	---	GAGGIA 421944060181	FOR BREW GROUPS - PER GRUPPI EROGAZIONE	BRERA
3	**1324131**	---	GAGGIA 147470763	FOR COFFEE GRINDERS - PER MACINACAFFE	TITANIUM

PERNI GAGGIA
PINS GAGGIA
STIFTE GAGGIA
PERNOS GAGGIA

1

2

3

4

Photo	LF Code	Dimensions	Suitable for	Notes	For machine model
1	**1324158**	---	GAGGIA WGARB0710	FOR STEAM/WATER TAPS - PER RUBINETTI VAPORE/ACQUA	D90 - E90 - FD2000 - FE2000
2	**5038097**	---	GAGGIA WGARB0711	FOR STEAM/WATER TAPS - PER RUBINETTI VAPORE/ACQUA	D90 - E90 - FD2000 - FE2000
3	**1324400**	---	GAGGIA WGARB0866/A	FOR STEAM/WATER TAPS - PER RUBINETTI VAPORE/ACQUA	DECO - D90 - E90
4	**1324089**	---	GAGGIA WGARB0610/02	FOR STEAM/WATER TAPS - PER RUBINETTI VAPORE/ACQUA	DECO - FD2000 - FE2000

PERNI GAGGIA SPAGNA
PINS GAGGIA SPAGNA
STIFTE GAGGIA SPAGNA
PERNOS GAGGIA SPAGNA

1

2

3

4

5

Photo	LF Code	Dimensions	Suitable for	Notes	For machine model
1	**1324085**	---	GAGGIA SPAGNA 08298900	FOR BREW GROUPS - PER GRUPPI EROGAZIONE	NERA
2	**1324052**	---	GAGGIA SPAGNA NT0030	FOR BREW GROUPS - PER GRUPPI EROGAZIONE	NERA
3	**1349406**	---	GAGGIA SPAGNA 07358609	FOR STEAM/WATER TAPS - PER RUBINETTI VAPORE/ACQUA	NERA
4	**1324066**	---	GAGGIA SPAGNA 11156530	FOR STEAM/WATER TAPS - PER RUBINETTI VAPORE/ACQUA	NERA
5	**1324015**	---	GAGGIA SPAGNA 07665508	FOR INLET TAPS - PER RUBINETTI CARICO	NERA

PERNI GRIMAC
PINS GRIMAC
STIFTE GRIMAC
PERNOS GRIMAC

1

2

3

4

5

6

Photo	LF Code	Dimensions	Suitable for	Notes	For machine model
1	**1324127**	---	GRIMAC 1030100002-MG352	FOR BREW GROUPS - PER GRUPPI EROGAZIONE	NUVOLA - TERRY
2	**1324126**	---	GRIMAC 1200700002-MG055/1	FOR BREW GROUPS - PER GRUPPI EROGAZIONE	NUVOLA - TERRY
3	**1324013**	---	GRIMAC 1201100011-F153	FOR BREW GROUPS - PER GRUPPI EROGAZIONE	ECLISSE - TEN
4	**1250513**	40 mm	GRIMAC GR781	FOR BREW GROUPS - PER GRUPPI EROGAZIONE	ECLISSE - TEN
5	**1324303**	6x6 mm M3 H10.1 mm	GRIMAC GR753	FOR BREW GROUPS - PER GRUPPI EROGAZIONE	ECLISSE - TEN
6	**1324006**	5x5 mm M4 H40 mm	GRIMAC 1201100014-F162	FOR BREW GROUPS - PER GRUPPI EROGAZIONE	ECLISSE - TEN

PERNI GRIMAC
PINS GRIMAC
STIFTE GRIMAC
PERNOS GRIMAC

1

2

3

4

5

Photo	LF Code	Dimensions	Suitable for	Notes	For machine model
1	**1324086**	---	GRIMAC 1201500029-GR355	FOR STEAM/WATER TAPS - PER RUBINETTI VAPORE/ACQUA	ZOLAII
2	**1324026**	---	GRIMAC GR357	FOR STEAM/WATER TAPS - PER RUBINETTI VAPORE/ACQUA	ZOLAII
3	**1324301**	---	GRIMAC GR739	FOR STEAM/WATER TAPS - PER RUBINETTI VAPORE/ACQUA	ECLISSE - TWENTY
4	**1324300**	---	GRIMAC 1201100038-GR090	FOR STEAM/WATER TAPS - PER RUBINETTI VAPORE/ACQUA	ECLISSE - TWENTY
5	**1324302**	---	GRIMAC 1201500027-GR093	FOR INLET TAPS - PER RUBINETTI CARICO	ECLISSE - TEN

PERNI ISOMAC
PINS ISOMAC
STIFTE ISOMAC
PERNOS ISOMAC

1

2

3

Photo	LF Code	Dimensions	Suitable for	Notes	For machine model
1	**1324048**	---	ISOMAC ISCAM824A1	FOR BREW GROUPS - PER GRUPPI EROGAZIONE	MILLENNIUM - MONDIALE - TEA
2	**5057111**	75 mm	ISOMAC IS000202	FOR STEAM/WATER TAPS - PER RUBINETTI VAPORE/ACQUA	GIADA - MAVERICK - VENUS
3	**1225004**	---	ISOMAC ISAST1057CR	FOR BREW GROUPS - PER GRUPPI EROGAZIONE	MILLENNIUM - MONDIALE - TEA - ZAFFIRO

Perni
Pins
Stifte
Pernos

PERNI ITALCREM
PINS ITALCREM
STIFTE ITALCREM
PERNOS ITALCREM

1

2

3

4

5

Photo	LF Code	Dimensions	Suitable for	Notes	For machine model
1	**1324085**	---	ITALCREM 08298900	FOR BREW GROUPS - PER GRUPPI EROGAZIONE	CAPRI
2	**1324052**	---	ITALCREM NT0030	FOR BREW GROUPS - PER GRUPPI EROGAZIONE	CAPRI
3	**1349406**	---	ITALCREM 07358609	FOR STEAM/WATER TAPS - PER RUBINETTI VAPORE/ACQUA	CAPRI
4	**1324066**	---	ITALCREM 11156530	FOR STEAM/WATER TAPS - PER RUBINETTI VAPORE/ACQUA	CAPRI
5	**1324015**	---	ITALCREM 07665508	FOR INLET TAPS - PER RUBINETTI CARICO	CAPRI

PERNI LA PICCOLA
PINS LA PICCOLA
STIFTE LA PICCOLA
PERNOS LA PICCOLA

1

Photo	LF Code	Dimensions	Suitable for	Notes	For machine model
1	**1324184**	ø 18x78 mm	LA PICCOLA B02	FOR BREW GROUPS - PER GRUPPI EROGAZIONE	PICCOLA

PERNI LAVAZZA
PINS LAVAZZA
STIFTE LAVAZZA
PERNOS LAVAZZA

1

2

3

Photo	LF Code	Dimensions	Suitable for	Notes	For machine model
1	**1324158**	---	LAVAZZA 10062047	FOR STEAM/WATER TAPS - PER RUBINETTI VAPORE/ACQUA	LB4800
2	**5038097**	---	LAVAZZA 10062048	FOR STEAM/WATER TAPS - PER RUBINETTI VAPORE/ACQUA	LB4800
3	**1324400**	---	LAVAZZA 10062053	FOR STEAM/WATER TAPS - PER RUBINETTI VAPORE/ACQUA	LB4800

PERNI MAIRALI
PINS MAIRALI
STIFTE MAIRALI
PERNOS MAIRALI

1

2

3

4

5

Photo	LF Code	Dimensions	Suitable for	Notes	For machine model
1	**1324085**	---	MAIRALI 08298900	FOR BREW GROUPS - PER GRUPPI EROGAZIONE	GIULIETTA
2	**1324052**	---	MAIRALI NT0030	FOR BREW GROUPS - PER GRUPPI EROGAZIONE	GIULIETTA
3	**1349406**	---	MAIRALI 07358609	FOR STEAM/WATER TAPS - PER RUBINETTI VAPORE/ACQUA	GIULIETTA
4	**1324066**	---	MAIRALI 11156530	FOR STEAM/WATER TAPS - PER RUBINETTI VAPORE/ACQUA	GIULIETTA
5	**1324015**	---	MAIRALI 07665508	FOR INLET TAPS - PER RUBINETTI CARICO	GIULIETTA

PERNI MARZOCCO
PINS MARZOCCO
STIFTE MARZOCCO
PERNOS MARZOCCO

1

2

3

4

5

6

Photo	LF Code	Dimensions	Suitable for	Notes	For machine model
1	**1348074**	---	MARZOCCO A.1.002	FOR STEAM/WATER TAPS - PER RUBINETTI VAPORE/ACQUA	GB5 - FB80
2	**1324188**	---	MARZOCCO A.5.018	FOR STEAM/WATER TAPS - PER RUBINETTI VAPORE/ACQUA	LINEA PB
3	**1349406**	---	MARZOCCO L168	FOR STEAM/WATER TAPS - PER RUBINETTI VAPORE/ACQUA	LINEA - FB70
4	**1349471**	---	MARZOCCO L168/0	FOR STEAM/WATER TAPS - PER RUBINETTI VAPORE/ACQUA	LINEA - FB70
5	**1324066**	---	MARZOCCO L169	FOR STEAM/WATER TAPS - PER RUBINETTI VAPORE/ACQUA	LINEA - FB70
6	**1324187**	28 mm	MARZOCCO A.1.022	FOR STEAM/WATER TAPS - PER RUBINETTI VAPORE/ACQUA	GB5 - FB80

PERNI MARZOCCO
PINS MARZOCCO
STIFTE MARZOCCO
PERNOS MARZOCCO

1

Photo	LF Code	Dimensions	Suitable for	Notes	For machine model
1	**1324186**	---	MARZOCCO B.1.004.K	FOR STEAM/WATER TAPS - PER RUBINETTI VAPORE/ACQUA	GS3

Perni
Pins
Stifte
Pernos

PERNI MCE
PINS MCE
STIFTE MCE
PERNOS MCE

1

Photo	LF Code	Dimensions	Suitable for	Notes	For machine model
1	**1324077**	---	MCE 25309	FOR STEAM/WATER TAPS - PER RUBINETTI VAPORE/ACQUA	START

PERNI NUOVA SIMONELLI
PINS NUOVA SIMONELLI
STIFTE NUOVA SIMONELLI
PERNOS NUOVA SIMONELLI

1

2

3

4

5

6

Photo	LF Code	Dimensions	Suitable for	Notes	For machine model
1	**1324021**	---	NUOVA SIMONELLI 07300105	FOR STEAM/WATER TAPS - PER RUBINETTI VAPORE/ACQUA	PREMIER - MAC
2	**1324072**	---	NUOVA SIMONELLI 07300035	FOR STEAM/WATER TAPS - PER RUBINETTI VAPORE/ACQUA	OPTIMA
3	**1324073**	---	NUOVA SIMONELLI 07300221	FOR STEAM/WATER TAPS - PER RUBINETTI VAPORE/ACQUA	APPIA - AURELIA
4	**1324064**	---	NUOVA SIMONELLI 07300107	FOR STEAM/WATER TAPS - PER RUBINETTI VAPORE/ACQUA	PREMIER - MAC
5	**1324069**	---	NUOVA SIMONELLI 07300810	FOR STEAM/WATER TAPS - PER RUBINETTI VAPORE/ACQUA	APPIA - AURELIA
6	**1324022**	---	NUOVA SIMONELLI 07300113	FOR STEAM/WATER TAPS - PER RUBINETTI VAPORE/ACQUA	PREMIER - MAC

PERNI PAVONI
PINS PAVONI
STIFTE PAVONI
PERNOS PAVONI

1

2

3

4

5

Photo	LF Code	Dimensions	Suitable for	Notes	For machine model
1	**1184551**	---	PAVONI 314077	FOR BREW GROUPS - PER GRUPPI EROGAZIONE	BAR - BART - PUB
2	**1324033**	6x6 mm M3 H12.1 mm	PAVONI 312227	FOR BREW GROUPS - PER GRUPPI EROGAZIONE	BAR - BART - PUB
3	**1324013**	---	PAVONI 314133	FOR BREW GROUPS - PER GRUPPI EROGAZIONE	BAR - BART - PUB
4	**1324201**	---	PAVONI 312229	FOR BREW GROUPS - PER GRUPPI EROGAZIONE	BAR - BART - PUB - HOTEL
5	**1324200**	---	PAVONI 312228	FOR BREW GROUPS - PER GRUPPI EROGAZIONE	BAR - BART - PUB - HOTEL

PERNI PAVONI
PINS PAVONI
STIFTE PAVONI
PERNOS PAVONI

1

2

3

4

5

6

Photo	LF Code	Dimensions	Suitable for	Notes	For machine model
1	**1324400**	---	PAVONI 393740	FOR STEAM/WATER TAPS - PER RUBINETTI VAPORE/ACQUA	BAR - BART - PUB
2	**5038097**	---	PAVONI 314084	FOR STEAM/WATER TAPS - PER RUBINETTI VAPORE/ACQUA	BAR - HOTEL - PUB
3	**1324158**	---	PAVONI 314022	FOR STEAM/WATER TAPS - PER RUBINETTI VAPORE/ACQUA	BAR - HOTEL - PUB
4	**1349406**	---	PAVONI	FOR STEAM/WATER TAPS - PER RUBINETTI VAPORE/ACQUA	BAR - PUB
5	**1349471**	---	PAVONI 312226	FOR STEAM/WATER TAPS - PER RUBINETTI VAPORE/ACQUA	BAR - PUB
6	**1324066**	---	PAVONI 311333	FOR STEAM/WATER TAPS - PER RUBINETTI VAPORE/ACQUA	BAR - PUB

PERNI PAVONI
PINS PAVONI
STIFTE PAVONI
PERNOS PAVONI

1

2

3

Photo	LF Code	Dimensions	Suitable for	Notes	For machine model
1	**1324092**	---	PAVONI 3140463	FOR BREW GROUPS - PER GRUPPI EROGAZIONE	EUROPICCOLA - PROFESSIONAL
2	**5027689**	---	PAVONI 3113034	FOR STEAM/WATER TAPS - PER RUBINETTI VAPORE/ACQUA	EUROPICCOLA - PROFESSIONAL
3	**1348078**	---	PAVONI 0P128870420	FOR STEAM/WATER TAPS - PER RUBINETTI VAPORE/ACQUA	ESPRESSO - EUROBAR

PERNI PROMAC
PINS PROMAC
STIFTE PROMAC
PERNOS PROMAC

1

2

3

4

Photo	LF Code	Dimensions	Suitable for	Notes	For machine model
1	**1324117**	---	PROMAC 80230060	FOR BREW GROUPS - PER GRUPPI EROGAZIONE	CLUB - COMPACT - GREEN
2	**1348046**	---	PROMAC 23224002	FOR STEAM/WATER TAPS - PER RUBINETTI VAPORE/ACQUA	CLUB - COMPACT - GREEN
3	**1324078**	---	PROMAC 10060002	FOR STEAM/WATER TAPS - PER RUBINETTI VAPORE/ACQUA	CLUB - COMPACT - GREEN
4	**1349038**	---	PROMAC 25224001	FOR INLET TAPS - PER RUBINETTI CARICO	COMPACT - GREEN

Perni
Pins
Stifte
Pernos

PERNI RANCILIO
PINS RANCILIO
STIFTE RANCILIO
PERNOS RANCILIO

1

2

3

4

5

6

Photo	LF Code	Dimensions	Suitable for	Notes	For machine model
1	**1184853**	---	RANCILIO 25118004	FOR BREW GROUPS - PER GRUPPI EROGAZIONE	CLASSE10 - Z11
2	**1324078**	---	RANCILIO 10060002	FOR STEAM/WATER TAPS - PER RUBINETTI VAPORE/ACQUA	CLASSE10 - EPOCA
3	**1348046**	---	RANCILIO 23224002	FOR STEAM/WATER TAPS - PER RUBINETTI VAPORE/ACQUA	CLASSE10 - EPOCA
4	**1349038**	---	RANCILIO 25224001	FOR STEAM/WATER TAPS - PER RUBINETTI VAPORE/ACQUA	S20 - Z11
5	**1324802**	---	RANCILIO 10706073	FOR STEAM/WATER TAPS - PER RUBINETTI VAPORE/ACQUA	CLASSE10 - EPOCA
6	**5057551**	---	RANCILIO 10706044	FOR STEAM/WATER TAPS - PER RUBINETTI VAPORE/ACQUA	CLASSE10-9-8-7-6

PERNI RENEKA
PINS RENEKA
STIFTE RENEKA
PERNOS RENEKA

1

Photo	LF Code	Dimensions	Suitable for	Notes	For machine model
1	**1184551**	---	RENEKA AT7479950	FOR BREW GROUPS - PER GRUPPI EROGAZIONE	ATALANTE - AMICI

PERNI ROYAL
PINS ROYAL
STIFTE ROYAL
PERNOS ROYAL

1

2

3

4

5

6

Photo	LF Code	Dimensions	Suitable for	Notes	For machine model
1	**1324048**	---	ROYAL 0530070	FOR BREW GROUPS - PER GRUPPI EROGAZIONE	DIADEMA - SYNCHRO
2	**1349471**	---	ROYAL 0540040	FOR STEAM/WATER TAPS - PER RUBINETTI VAPORE/ACQUA	DIADEMA - SYNCHRO
3	**1324066**	---	ROYAL 0540080	FOR STEAM/WATER TAPS - PER RUBINETTI VAPORE/ACQUA	DIADEMA - SYNCHRO
4	**1324180**	ø 7x47,5 mm	ROYAL 0510142	FOR INLET TAP - PER RUBINETTO CARICO	DIADEMA - DOGARESSA
5	**1324164**	ø 10x40 mm	ROYAL	FOR BREW GROUPS - PER GRUPPI EROGAZIONE	VALLELUNGA LEVA
6	**1324183**	47,5 mm	ROYAL 0510152	FOR INLET TAP - PER RUBINETTO CARICO	DIADEMA - DOGARESSA

PERNI SAB ITALIA
PINS SAB ITALIA
STIFTE SAB ITALIA
PERNOS SAB ITALIA

1

Photo	LF Code	Dimensions	Suitable for	Notes	For machine model
1	**1324024**	---	SAB ITALIA SVMNP011	FOR BREW GROUPS - PER GRUPPI EROGAZIONE	ELLIPSE - E96 - MODERNA

PERNI SAECO
PINS SAECO
STIFTE SAECO
PERNOS SAECO

1

2

3

4

5

Photo	LF Code	Dimensions	Suitable for	Notes	For machine model
1	**5038097**	---	SAECO WGARB0711	FOR STEAM/WATER TAPS - PER RUBINETTI VAPORE/ACQUA	AROMA
2	**1324158**	---	SAECO WGARB0710	FOR STEAM/WATER TAPS - PER RUBINETTI VAPORE/ACQUA	AROMA
3	**1324400**	---	SAECO WGARB0866/A	FOR STEAM/WATER TAPS - PER RUBINETTI VAPORE/ACQUA	AROMA
4	**1324089**	---	SAECO WGARB0610/02	FOR STEAM/WATER TAPS - PER RUBINETTI VAPORE/ACQUA	AROMA
5	**1324911**	---	SAECO 11009019	FOR STEAM/WATER TAPS - PER RUBINETTI VAPORE/ACQUA	INCANTO

PERNI SAECO
PINS SAECO
STIFTE SAECO
PERNOS SAECO

1

2

3

4

5

6

Photo	LF Code	Dimensions	Suitable for	Notes	For machine model
1	**1324901**	---	SAECO 11009013	FOR STEAM/WATER TAPS - PER RUBINETTI VAPORE/ACQUA	INCANTO
2	**1324902**	---	SAECO 9011.100	FOR STEAM/WATER TAPS - PER RUBINETTI VAPORE/ACQUA	INCANTO
3	**1348082**	---	SAECO 120642220	FOR STEAM/WATER TAPS - PER RUBINETTI VAPORE/ACQUA	FAMILY - TWIN
4	**5014767**	---	SAECO 11009018	FOR STEAM/WATER TAPS - PER RUBINETTI VAPORE/ACQUA	EASY - INCANTO
5	**1348078**	---	SAECO 128870420	FOR STEAM/WATER TAPS - PER RUBINETTI VAPORE/ACQUA	FAMILY - GRANCREMA
6	**1324131**	---	SAECO 147470763	FOR COFFEE GRINDERS - PER MACINACAFFE	INCANTO - ROYALOFFICE

Perni
Pins
Stifte
Pernos

PERNI SAECO
PINS SAECO
STIFTE SAECO
PERNOS SAECO

1

2

3

Photo	LF Code	Dimensions	Suitable for	Notes	For machine model
1	**5035765**	---	SAECO 9161.434	FOR BOILER - PER CALDAIA	ROYAL - ROYAL DIGITAL - ROYAL NEW - ROYAL PROFESSIONAL
2	**5069081**	---	SAECO 421944060181	FOR BREW GROUPS - PER GRUPPI EROGAZIONE	INTELIA - MOLTIO - SYNTIA - XSMALL
3	**5060578**	---	SAECO 11005113	FOR BOILER - PER CALDAIA	ESPRESSO ITALIANO

PERNI SAN MARCO
PINS SAN MARCO
STIFTE SAN MARCO
PERNOS SAN MARCO

1

2

3

4

5

Photo	LF Code	Dimensions	Suitable for	Notes	For machine model
1	**1186138**	---	SAN MARCO 205201	FOR BREW GROUPS - PER GRUPPI EROGAZIONE	FSC
2	**1324080**	---	SAN MARCO 205180	FOR BREW GROUPS - PER GRUPPI EROGAZIONE	FSC
3	**1324083**	---	SAN MARCO 205165	FOR BREW GROUPS - PER GRUPPI EROGAZIONE	FSC
4	**1324014**	---	SAN MARCO 205166	FOR BREW GROUPS - PER GRUPPI EROGAZIONE	LEVA
5	**1324017**	---	SAN MARCO 202016	FOR BREW GROUPS - PER GRUPPI EROGAZIONE	LEVA

PERNI SAN MARCO
PINS SAN MARCO
STIFTE SAN MARCO
PERNOS SAN MARCO

1

2

3

4

5

Photo	LF Code	Dimensions	Suitable for	Notes	For machine model
1	**1324111**	---	SAN MARCO 502004	FOR STEAM/WATER TAPS - PER RUBINETTI VAPORE/ACQUA	100 - 85 - 95 - LEVA
2	**1324081**	---	SAN MARCO 205094	FOR STEAM/WATER TAPS - PER RUBINETTI VAPORE/ACQUA	105 - 100 - 85 - 95
3	**1324501**	---	SAN MARCO 206941	FOR STEAM/WATER TAPS - PER RUBINETTI VAPORE/ACQUA	105 - 100
4	**1324082**	---	SAN MARCO 205130	FOR INLET TAPS - PER RUBINETTI CARICO	105 - 85 - 95 - LEVA
5	**1324079**	ø 6x26 mm	SAN MARCO 205096	FOR INLET TAPS - PER RUBINETTI CARICO	105 - 85 - 95 - LEVA

PERNI SANREMO
PINS SANREMO
STIFTE SANREMO
PERNOS SANREMO

1

Photo	LF Code	Dimensions	Suitable for	Notes	For machine model
1	**1324066**	---	SANREMO 10402061	FOR STEAM/WATER TAPS - PER RUBINETTI VAPORE/ACQUA	AMALFI - CAPRI - MILANO LX

PERNI SCALA
PINS SCALA
STIFTE SCALA
PERNOS SCALA

1

2

3

4

Photo	LF Code	Dimensions	Suitable for	Notes	For machine model
1	**1349471**	---	SCALA C-0188	FOR STEAM/WATER TAPS - PER RUBINETTI VAPORE/ACQUA	IRIS - NORMA - EROICA
2	**1324086**	---	SCALA C-0162	FOR STEAM/WATER TAPS - PER RUBINETTI VAPORE/ACQUA	EROICA
3	**1324066**	---	SCALA C-0185	FOR STEAM/WATER TAPS - PER RUBINETTI VAPORE/ACQUA	IRIS - NORMA - EROICA
4	**1324026**	---	SCALA C-0164	FOR STEAM/WATER TAPS - PER RUBINETTI VAPORE/ACQUA	EROICA

PERNI SCALA
PINS SCALA
STIFTE SCALA
PERNOS SCALA

1

2

3

4

Photo	LF Code	Dimensions	Suitable for	Notes	For machine model
1	**1324024**	---	SCALA C-0308	FOR BREW GROUPS - PER GRUPPI EROGAZIONE	CARMEN
2	**1324048**	---	SCALA C-0042	FOR BREW GROUPS - PER GRUPPI EROGAZIONE	BUTTERFLY - EROICA
3	**1324181**	27.5 mm	SCALA C-0434	FOR INLET TAP - PER RUBINETTO CARICO	CARMEN
4	**1324180**	ø 7x47.5 mm	SCALA C-0423	FOR INLET TAP - PER RUBINETTO CARICO	CARMEN - EROICA - NORMA

PERNI SPAZIALE
PINS SPAZIALE
STIFTE SPAZIALE
PERNOS SPAZIALE

1 2 3 4 5 6

Photo	LF Code	Dimensions	Suitable for	Notes	For machine model
1	**1324037**	---	SPAZIALE 01391	FOR STEAM/WATER TAPS - PER RUBINETTI VAPORE/ACQUA	NEW RAPID - SELETRON
2	**1348423**	---	SPAZIALE 01406	FOR STEAM/WATER TAPS - PER RUBINETTI VAPORE/ACQUA	NEW RAPID - SELETRON
3	**1348064**	---	SPAZIALE 00232	FOR STEAM/WATER TAPS - PER RUBINETTI VAPORE/ACQUA	S1 - PROFESSIONALE
4	**1324177**	43,5 mm	SPAZIALE 08333	FOR STEAM/WATER TAPS - PER RUBINETTI VAPORE/ACQUA	S2 - S2 SPAZIO
5	**1324038**	---	SPAZIALE 00220	FOR STEAM/WATER TAPS - PER RUBINETTI VAPORE/ACQUA	S1 - S3 - S5 - S40
6	**1324108**	---	SPAZIALE 08461	FOR STEAM/WATER TAPS - PER RUBINETTI VAPORE/ACQUA	S5 - S5 COMPACT - S40

PERNI SPAZIALE
PINS SPAZIALE
STIFTE SPAZIALE
PERNOS SPAZIALE

1 2 3 4 5 6

Photo	LF Code	Dimensions	Suitable for	Notes	For machine model
1	**1324109**	---	SPAZIALE 05944	FOR STEAM/WATER TAPS - PER RUBINETTI VAPORE/ACQUA	S3
2	**1324110**	ø 4x15 mm	SPAZIALE 08466	FOR STEAM/WATER TAPS - PER RUBINETTI VAPORE/ACQUA	S5 - S5 COMPACT - S40
3	**1324107**	ø 4x29 mm	SPAZIALE 08465	FOR STEAM/WATER TAPS - PER RUBINETTI VAPORE/ACQUA	S5 - S5 COMPACT - S40
4	**1324036**	---	SPAZIALE 00238	FOR INLET TAPS - PER RUBINETTI CARICO	S3 - S5 - S40
5	**1324112**	---	SPAZIALE 01390	FOR INLET TAPS - PER RUBINETTI CARICO	NEW RAPID
6	**1324097**	---	SPAZIALE 00618	FOR BREW GROUPS - PER GRUPPI EROGAZIONE	S1 - S3 - SPAZIO

PERNI VFA
PINS VFA
STIFTE VFA
PERNOS VFA

1

2

3

4

5

6

Photo	LF Code	Dimensions	Suitable for	Notes	For machine model
1	**1184551**	---	VFA	FOR BREW GROUPS - PER GRUPPI EROGAZIONE	---
2	**1324001**	6x6 mm M3 H11.1 mm	VFA	FOR BREW GROUPS - PER GRUPPI EROGAZIONE	---
2	**1324033**	6x6 mm M3 H12.1 mm	VFA	FOR BREW GROUPS - PER GRUPPI EROGAZIONE	---
3	**1324006**	5x5 mm M4 H40 mm	VFA	FOR BREW GROUPS - PER GRUPPI EROGAZIONE	---
4	**1324007**	6x6 mm M3 H6.5 mm	VFA	FOR BREW GROUPS - PER GRUPPI EROGAZIONE	---
5	**1324013**	---	VFA	FOR BREW GROUPS - PER GRUPPI EROGAZIONE	---
6	**1348317**	---	VFA	FOR STEAM/WATER TAPS - PER RUBINETTI VAPORE/ACQUA	---

PERNI VIBIEMME
PINS VIBIEMME
STIFTE VIBIEMME
PERNOS VIBIEMME

1

2

3

4

Photo	LF Code	Dimensions	Suitable for	Notes	For machine model
1	**1324048**	---	VIBIEMME RACCALCAGR	FOR BREW GROUPS - PER GRUPPI EROGAZIONE	CUBO - DOMOBAR
2	**1324094**	---	VIBIEMME RACCPEINTR	FOR BREW GROUPS - PER GRUPPI EROGAZIONE	CUBO - DOMOBAR
3	**1324013**	---	VIBIEMME RACCPEVAER	FOR BREW GROUPS - PER GRUPPI EROGAZIONE	CUBO - DOMOBAR
4	**1324164**	ø 10x40 mm	VIBIEMME PERNOCEGRPIST	FOR BREW GROUPS - PER GRUPPI EROGAZIONE	REPLICA

PERNI VIBIEMME
PINS VIBIEMME
STIFTE VIBIEMME
PERNOS VIBIEMME

1

2

3

4

5

6

Photo	LF Code	Dimensions	Suitable for	Notes	For machine model
1	**1324086**	---	VIBIEMME RACCASRUREP	FOR STEAM/WATER TAPS - PER RUBINETTI VAPORE/ACQUA	CHIMAERA - CUBO
2	**1324026**	---	VIBIEMME RACCPEAPVA	FOR STEAM/WATER TAPS - PER RUBINETTI VAPORE/ACQUA	CHIMAERA - CUBO
3	**1548018**	52 mm	VIBIEMME RACCASRUDOSU	FOR STEAM/WATER TAPS - PER RUBINETTI VAPORE/ACQUA	DOMOBAR
4	**1349471**	---	VIBIEMME RACCGUIASTEVO	FOR STEAM/WATER TAPS - PER RUBINETTI VAPORE/ACQUA	EVOLUTION - KOMETA
5	**1324165**	---	VIBIEMME RACCASTRUBEVO	FOR STEAM/WATER TAPS - PER RUBINETTI VAPORE/ACQUA	EVOLUTION - KOMETA
6	**1324066**	---	VIBIEMME RACCASTARUBK	FOR STEAM/WATER TAPS - PER RUBINETTI VAPORE/ACQUA	KOMETA

Perni
Pins
Stifte
Pernos

PERNI VIBIEMME
PINS VIBIEMME
STIFTE VIBIEMME
PERNOS VIBIEMME

1

2

3

4

Photo	LF Code	Dimensions	Suitable for	Notes	For machine model
1	**5052820**	35 mm	VIBIEMME RACCASTRUBVLO	FOR STEAM/WATER TAPS - PER RUBINETTI VAPORE/ACQUA	LOLLO
2	**1324162**	46 mm	VIBIEMME RACCASTCAREVO	FOR INLET TAPS - PER RUBINETTI CARICO	CHIMAERA - EVOLUTION
3	**1324163**	46 mm	VIBIEMME ASTARUBCARICO	FOR INLET TAPS - PER RUBINETTI CARICO	CUBO - DOSAPLUS
4	**1324033**	6x6 mm M3 H12.1 mm	VIBIEMME RACCGAVAINQU	FOR INLET TAPS - PER RUBINETTI CARICO	KOMETA - MERCURY

PERNI VISACREM
PINS VISACREM
STIFTE VISACREM
PERNOS VISACREM

1

2

3

4

5

Photo	LF Code	Dimensions	Suitable for	Notes	For machine model
1	**1324085**	---	VISACREM 08298900	FOR BREW GROUPS - PER GRUPPI EROGAZIONE	NERA
2	**1324052**	---	VISACREM NT0030	FOR BREW GROUPS - PER GRUPPI EROGAZIONE	NERA
3	**1349406**	---	VISACREM 07358609	FOR STEAM/WATER TAPS - PER RUBINETTI VAPORE/ACQUA	NERA
4	**1324066**	---	VISACREM 11156530	FOR STEAM/WATER TAPS - PER RUBINETTI VAPORE/ACQUA	NERA
5	**1324015**	---	VISACREM 07665508	FOR INLET TAPS - PER RUBINETTI CARICO	NERA

PERNI WEGA
PINS WEGA
STIFTE WEGA
PERNOS WEGA

1

2

3

4

5

6

Photo	LF Code	Dimensions	Suitable for	Notes	For machine model
1	**1324025**	---	WEGA WY27421007	FOR BREW GROUPS - PER GRUPPI EROGAZIONE	E61 GROUPS
2	**1324048**	---	WEGA WY27078008	FOR BREW GROUPS - PER GRUPPI EROGAZIONE	E61 GROUPS
3	**1324094**	---	WEGA WY27421006	FOR BREW GROUPS - PER GRUPPI EROGAZIONE	E61 GROUPS
4	**1324013**	---	WEGA WY27421005	FOR BREW GROUPS - PER GRUPPI EROGAZIONE	E61 GROUPS
5	**1324001**	6x6 mm M3 H11.1 mm	WEGA WY27421013	FOR BREW GROUPS - PER GRUPPI EROGAZIONE	E61 GROUPS
5	**1324033**	6x6 mm M3 H12.1 mm	WEGA WY27421012	FOR BREW GROUPS - PER GRUPPI EROGAZIONE	E61 GROUPS
6	**1324006**	5x5 mm M4 H40 mm	WEGA W10345	FOR BREW GROUPS - PER GRUPPI EROGAZIONE	E61 GROUPS

PERNI WEGA
PINS WEGA
STIFTE WEGA
PERNOS WEGA

1

2

3

4

5

6

Photo	LF Code	Dimensions	Suitable for	Notes	For machine model
1	**1324115**	5x5 mm M6 H6 mm	WEGA WY27421014	FOR BREW GROUPS - PER GRUPPI EROGAZIONE	E61 GROUPS
2	**1324007**	6x6 mm M3 H6.5 mm	WEGA W10349	FOR BREW GROUPS - PER GRUPPI EROGAZIONE	E61 GROUPS
3	**1324201**	---	WEGA WY27301A	FOR BREW GROUPS - PER GRUPPI EROGAZIONE	ALE
4	**1324200**	---	WEGA WY27302	FOR BREW GROUPS - PER GRUPPI EROGAZIONE	ALE
5	**1324077**	---	WEGA WY25309	FOR STEAM/WATER TAPS - PER RUBINETTI VAPORE/ACQUA	STANDARD
6	**1324076**	ø 8x35.6 mm	WEGA WY25315	FOR INLET TAPS - PER RUBINETTI CARICO	STANDARD

PERNI ZACCONI
PINS ZACCONI
STIFTEN ZACCONI
PERNOS ZACCONI

1

Photo	LF Code	Dimensions	Suitable for	Notes	For machine model
1	**1324179**	---	ZACCONI 53	FOR BREW GROUPS - PER GRUPPI EROGAZIONE	ESPRESSO BABY - RIVIERA

Pictures with **360°** rotation!

The view of all sides, with zoom, makes it easier to identify even the smallest details

360°

www.lfspareparts724.com

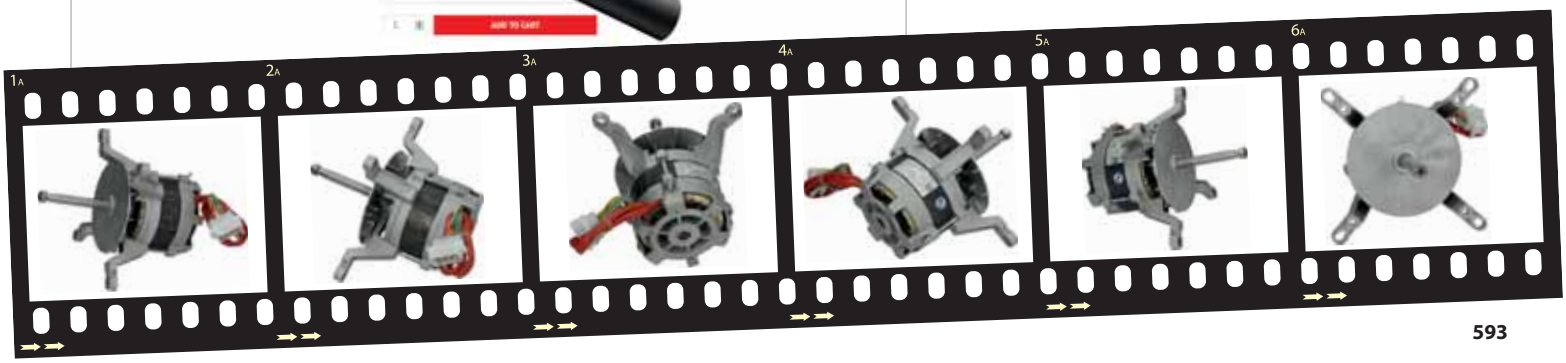

POMPE VIBRAZIONE ULKA
VIBRATORY PUMPS ULKA
VIBRATIONSPUMPEN ULKA
BOMBAS VIBRACIÓN ULKA

1 - EP

2 - EP.GW

3 - EX

4 - EX.GW

5 - EX

6 - EP / EK

Photo	LF Code	Model	Watt - Volt	Connections
1	**1331018**	EP4	48W 230V 50Hz	ø 1/8"- ø 6 mm
1	**1122738**	EP5	48W 24V 50/60Hz	ø 1/8"- ø 6 mm
1	**1122737**	EP5	48W 230V 50Hz	ø 1/8"- ø 6 mm
1	**1331054**	EP7	48W 230V 50Hz	countersunk - svasata ø 1/8"- ø 6 mm
1	**1331037**	EP8	26W 230/240V 50Hz	ø 1/8"- ø 6 mm
2	**1122002**	EP5GW	48W 230V 50Hz	ø 1/8"- ø 6 mm
2	**1331026**	EP5GW	48W 230V 50Hz	countersunk - svasata ø 1/8"- ø 6 mm
2	**1331028**	EP8GW	26W 230V 50Hz	ø 1/8"- ø 6 mm
3	**1122746**	EX4	48W 230V 50Hz	ø 1/8"- ø 6 mm
3	**1122747**	EX4	48W 24V 50/60Hz	ø 1/8"- ø 6 mm
3	**1122735**	EX5	48W 230V 50Hz	ø 1/8"- ø 6 mm
3	**1122739**	EX5	48W 230V 50Hz	countersunk - svasata ø 1/8"- ø 6 mm
3	**1122736**	EX5	48W 24V 50/60Hz	ø 1/8"- ø 6 mm
3	**1122740**	EX5	48W 24V 50/60Hz	countersunk - svasata ø 1/8"- ø 6 mm
3	**1331036**	EX7	48W 24V 50/60Hz	ø 1/8"- ø 6 mm
3	**1120025**	EX7	48W 230V 50Hz	countersunk - svasata ø 1/8"- ø 6 mm
4	**1331029**	EX4GW	48W 230V 50Hz	ø 1/8"- ø 6 mm
4	**1331006**	EX5GW	48W 230V 50Hz	ø 1/8"- ø 6 mm
4	**1331016**	EX7GW	48W 230V 50Hz	ø 1/8"- ø 6 mm
5	**1122601**	EX5	41W 120V 60Hz	ø 1/8"- ø 6 mm
5	**1122603**	EX5	41W 120V 60Hz	countersunk - svasata ø 1/8"- ø 6 mm
5	**1122604**	EAX4	52W 120V 60Hz	ø 1/8"- ø 6 mm
5	**2101958**	EAX5	52W 120V 60Hz	ø 1/8"- ø 6 mm
5	**5062745**	EAX5	64W 220V 60Hz	ø 1/8"- ø 6 mm
6	**2102265**	EP5	41W 120V 60Hz	ø 1/8"- ø 6 mm
6	**5062552**	EAP5	52W 120V 60Hz	ø 1/8"- ø 6 mm
6	**1122748**	EK	54W 230V 50Hz	ø 1/8"- ø 6 mm

POMPE VIBRAZIONE ULKA
VIBRATORY PUMPS ULKA
VIBRATIONSPUMPEN ULKA
BOMBAS VIBRACIÓN ULKA

1

2

Photo	LF Code	Model	Watt - Volt	Connections
1	**1331021**	HF	22W 230V 50Hz	ø 6.6 mm - ø 6.6 mm
1	**D331002**	HF/S	27W 230V 50Hz	ø 6.6 mm - ø 6.6 mm
2	**1331025**	NME 1	16W 230/240V 50Hz	ø 6.6 mm - ø 5 mm
2	**3331005**	NME 2	16W 230/240V 50Hz	ø 6.6 mm - ø 5 mm
2	**1331017**	NME 3S	16W 230/240V 50Hz	ø 6.6 mm - ø 5 mm
2	**1331024**	NME 4	16W 230/240V 50Hz	ø 6.6 mm - ø 5 mm
2	**D331001**	NMEHP 1/S	27W 230/240V 50Hz	ø 6.6 mm - ø 5 mm

POMPE VIBRAZIONE ARS/INVENSYS
VIBRATORY PUMPS ARS/INVENSYS
VIBRATIONSPUMPEN ARS/INVENSYS
BOMBAS VIBRACIÓN ARS/INVENSYS

1

2

3

4

5

6

Photo	LF Code	Model	Watt - Volt	Connections
1	**1122741**	ARS/INVENSYS - CP3A/ST	65W 230V 50Hz	ø 1/8"
2	**1122014**	ARS/INVENSYS - CP3A/ST	55W 110/120V 60Hz	ø 1/8"
3	**1331080**	ARS/INVENSYS - CP3A/ST	55W 110/120V 60Hz	ø 1/8"
4	**D331007**	ARS/INVENSYS - CP3A/ST	65W 230/240V 50Hz	ø 1/8"
5	**1443084**	CONTACT THERMOSTAT 115°C	---	---
6	**1250371**	SPRING - MOLLA	---	---

POMPE VIBRAZIONE ARS/INVENSYS
VIBRATORY PUMPS ARS/INVENSYS
VIBRATIONSPUMPEN ARS/INVENSYS
BOMBAS VIBRACIÓN ARS/INVENSYS

1

2

3

4

5

Photo	LF Code	Model	Watt - Volt	Connections
1	**D331004**	ARS/INVENSYS - CP04/ST	70W 230/240V 50Hz	ø 1/8"
2	**1122742**	ARS/INVENSYS - CP4SP	70W 230V 50Hz	ø 1/8"
3	**1331013**	PHOENIX 50N	53W 230V 50Hz	ø 1/8"
4	**1443084**	CONTACT THERMOSTAT 115°C	---	---
5	**1250371**	SPRING - MOLLA	---	---

POMPE VIBRAZIONE OLAB
VIBRATORY PUMPS OLAB
VIBRATIONSPUMPEN OLAB
BOMBAS VIBRACIÓN OLAB

1

2

Photo	LF Code	Model	Watt - Volt	Connections
1	**1331100**	22001/15	48W 230V 50Hz	ø 1/8"- ø 7 mm
2	**1331101**	22001/20	48W 230V 50Hz	ø 1/8"- ø 7 mm

POMPE VIBRAZIONE FLUID-O-TECH
VIBRATORY PUMPS FLUID-O-TECH
VIBRATIONSPUMPEN FLUID-O-TECH
BOMBAS VIBRACIÓN FLUID-O-TECH

1

2

3

4

5

Photo	LF Code	Watt - Volt	Connections
1	**1331004**	45W 24V 50/60Hz	ø 1/8"
1	**1331001**	50W 208/240V 50/60Hz	ø 1/8"
1	**1331002**	70W 220/240V 50Hz	ø 1/8"
2	**1331003**	50W 208/240V 50/60Hz	ø 1/8"
2	**1122607**	70W 110V 60Hz	ø 1/8"
2	**1331015**	70W 220/240V 50Hz	ø 1/8"
3	**1331005**	70W 220V 50Hz	ø 1/8"
4	**1331027**	70W 220/240V 50Hz	ø 1/8"
5	**1030001**	---	---

PROTETTORI TERMICI POMPE VIBRAZIONE
THERMAL PROTECTIONS FOR VIBRATORY PUMPS
THERMISCHE SCHUTZE VIBRATIONSPUMPEN
PROTECTORES TÉRMICOS BOMBAS VIBRACIÓN

1

2

3

4

5

6

Photo	LF Code	Description	Notes
1	**1331031**	100°C	ALL MODELS - TUTTI I MODELLI
2	**1410001**	120°C	ALL MODELS - TUTTI I MODELLI
3	**1331043**	120°C	DELONGHI 5213211161
3	**1331046**	120°C	DELONGHI 5232103200
3	**1331047**	120°C	DELONGHI 5213211801
4	**1410503**	77°C	ALL MODELS - TUTTI I MODELLI
4	**1410502**	100°C	ALL MODELS - TUTTI I MODELLI
4	**1410501**	155°C	ALL MODELS - TUTTI I MODELLI
4	**5049141**	184°C	ALL MODELS - TUTTI I MODELLI
4	**D410006**	227	DELONGHI 511816
5	**1049006**	184	JURA 61808
6	**5031150**	167°C	NUOVA SIMONELLI 09500014
6	**5031150**	167°C	VICTORIA ARDUINO 09500014

ACCESSORI PER POMPE VIBRAZIONE ULKA
ACCESSORIES FOR VIBRATORY PUMPS ULKA
ZUBEHÖR FÜR VIBRATIONSPUMPE ULKA
ACCESORIOS PARA BOMBAS VIBRACIÓN ULKA

1

2

3

4

5

6

Photo	LF Code	Description	For model
1	**1331023**	SQUARE DAMPER - ANTIVIBRANTE	EX - EP - EK - EA
1	**1331022**	SQUARE DAMPER - ANTIVIBRANTE	HF
2	**1331042**	SQUARE DAMPER - ANTIVIBRANTE	DELONGHI
3	**1331052**	SQUARE DAMPER - ANTIVIBRANTE	JURA
4	**1391010**	SHOCK ABSORBER - AMMORTIZZATORE	ALL MODELS - TUTTI I MODELLI
5	**1391001**	WIRE SUPPORT - SUPPORTO A FILO	ALL MODELS - TUTTI I MODELLI
6	**1391009**	WIRE SUPPORT - SUPPORTO A FILO	VENDING MODELS

ACCESSORI PER POMPE VIBRAZIONE ULKA
ACCESSORIES FOR VIBRATORY PUMPS ULKA
ZUBEHÖR FÜR VIBRATIONSPUMPE ULKA
ACCESORIOS PARA BOMBAS VIBRACIÓN ULKA

1

2

3

4

5

6

Photo	LF Code	Description
1	**1122609**	BY PASS - 1/8"F
1	**1349276**	BY PASS - 1/8"M-1/8"F
2	**1331019**	VALVE S2
2	**1331014**	VALVE S3
2	**1331020**	VALVE S3BP
2	**1331040**	VALVE S3HPR
3	**1331041**	VALVE S11/B
4	**1349651**	FITTING - RACCORDO - EX EP
5	**1331056**	FITTING - RACCORDO - MF HF
6	**1349652**	FITTING - RACCORDO

COMPONENTI VARI POMPE VIBRAZIONE
VARIOUS COMPONENTS FOR VIBRATORY PUMPS
VERSCHIEDENE KOMPONENTEN VIBRATIONSPUMPEN
COMPONENTES VARIADOS BOMBAS VIBRACIÓN

1

2

3

4

5

6

Photo	LF Code	Description	Notes
1	**1331034**	SELF-IGNITION VALVE - VALVOLA DI AUTOINNESCO ø 1/8"M	---
2	**5060593**	SAFETY VALVE - VALVOLA DI SICUREZZA	ISOMAC
3	**1120031**	SAFETY VALVE - VALVOLA DI SICUREZZA	SAECO
4	**1120029**	SAFETY VALVE - VALVOLA DI SICUREZZA	SAECO
5	**1331032**	SAFETY VALVE - VALVOLA DI SICUREZZA	SAECO
6	**5057079**	SAFETY VALVE - VALVOLA DI SICUREZZA	GAGGIA
6	**5057079**	SAFETY VALVE - VALVOLA DI SICUREZZA	SAECO
6	**5057079**	SAFETY VALVE - VALVOLA DI SICUREZZA	LAVAZZA

COMPONENTI VARI POMPE VIBRAZIONE
VARIOUS COMPONENTS FOR VIBRATORY PUMPS
VERSCHIEDENE KOMPONENTEN VIBRATIONSPUMPEN
COMPONENTES VARIADOS BOMBAS VIBRACIÓN

1

2

3

4

5

Photo	LF Code	Description	Notes
1	**D525002**	SAFETY VALVE - VALVOLA DI SICUREZZA	DELONGHI
2	**1331044**	SAFETY VALVE - VALVOLA DI SICUREZZA	DELONGHI
3	**1331045**	SAFETY VALVE - VALVOLA DI SICUREZZA	DELONGHI
4	**5060354**	SAFETY VALVE - VALVOLA DI SICUREZZA	DELONGHI
5	**5073742**	SAFETY VALVE - VALVOLA DI SICUREZZA	JURA - BOSCH

POMPE VIBRAZIONE BIALETTI
VIBRATORY PUMPS BIALETTI
VIBRATIONSPUMPE BIALETTI
BOMBAS VIBRACIÓN BIALETTI

1

2

3

4

Photo	LF Code	Model	Watt - Volt	Suitable for	For machine model
1	**1331057**	EP4FM	40W 230V 50Hz	BIALETTI 912990365	MOKONA CF40
2	**1331059**	EP4FM	40W 230V 50Hz	BIALETTI 912360130	TAZZONA CF36
3	**1331060**	EP4FM	40W 230V 50Hz	BIALETTI 912370190	TAZZISSIMA CF37
4	**1331061**	EP4FM	40W 230V 50Hz	BIALETTI 912700100	DIVINA CF70 - SMART CF65

POMPE VIBRAZIONE SYSKO
VIBRATORY PUMPS SYSKO
VIBRATIONSPUMPEN SYSKO
BOMBAS VIBRACIÓN SYSKO

1

Photo	LF Code	Model	Watt - Volt	Connections
1	**1331053**	SYSKO SAP HP4 - DELONGHI ES0079710	55W 230V 50Hz	---

The most complete and powerful online ordering service

Always with you… anywhere, anytime,

7 days / 24 hours

62,000
items always in stock

292,000
cross references to manufacturers' codes

2,300,000
items in our database, available upon request

www.lfspareparts724.com

POMPE VOLUMETRICHE ROTOFLOW
ROTARY VANE PUMPS ROTOFLOW
VERDRÄNGERPUMPEN ROTOFLOW
BOMBAS VOLUMÉTRICAS ROTOFLOW

1

2

3

4

5

6

Photo	LF Code	Flow rate (l/h)	Connections (ø)	Suitable for
1	**1330021**	50	3/8"	ALL BRANDS - TUTTE LE MARCHE
1	**1330035**	100	3/8"	ALL BRANDS - TUTTE LE MARCHE
1	**1330008**	150	3/8"	ALL BRANDS - TUTTE LE MARCHE
1	**1330026**	200	3/8"	ALL BRANDS - TUTTE LE MARCHE
1	**1330001**	100	3/8" NPT	ALL BRANDS - TUTTE LE MARCHE
1	**1330029**	150	3/8" NPT	ALL BRANDS - TUTTE LE MARCHE
1	**1330002**	200	3/8" NPT	ALL BRANDS - TUTTE LE MARCHE
1	**1330101**	100	3/8" NPT ECO BRASS	ALL BRANDS - TUTTE LE MARCHE
1	**1330102**	200	3/8" NPT ECO BRASS	ALL BRANDS - TUTTE LE MARCHE
1	**1330030**	200	3/8"	RANCILIO 10705960
2	**1330025**	70	3/8"	ALL BRANDS - TUTTE LE MARCHE
2	**1330038**	100	3/8"	ALL BRANDS - TUTTE LE MARCHE
2	**1330004**	100	3/8" NPT	ALL BRANDS - TUTTE LE MARCHE
2	**5031943**	200	3/8" NPT	ALL BRANDS - TUTTE LE MARCHE
3	**1330022**	50	3/8"	ALL BRANDS - TUTTE LE MARCHE
3	**1330005**	100	3/8"	ALL BRANDS - TUTTE LE MARCHE
3	**1330122**	50	3/8" ECO BRASS	ALL BRANDS - TUTTE LE MARCHE
4	**1330031**	150	3/8"	CASADIO - CIMBALI - FAEMA
5	**1330003**	200	3/8" NPT	FAEMA - GRIMAC
6	**1330006**	200	3/8"	UNIC

POMPE VOLUMETRICHE ROTOFLOW
ROTARY VANE PUMPS ROTOFLOW
VERDRÄNGERPUMPEN ROTOFLOW
BOMBAS VOLUMÉTRICAS ROTOFLOW

1 - INOX

2 - INOX

3 - INOX

Photo	LF Code	Flow rate (l/h)	Connections (ø)	Suitable for
1	**1330039**	70	3/8"	ALL BRANDS - TUTTE LE MARCHE
2	**1330036**	150	3/8"	ALL BRANDS - TUTTE LE MARCHE
3	**1330037**	200	3/8"	ALL BRANDS - TUTTE LE MARCHE

POMPE VOLUMETRICHE PROCON
ROTARY VANE PUMPS PROCON
VERDRÄNGERPUMPEN PROCON
BOMBAS VOLUMÉTRICAS PROCON

1

2

3

4

5

Photo	LF Code	Flow rate (l/h)	Connections (ø)	Suitable for
1	**1330012**	200	3/8" NPT	ALL BRANDS - TUTTE LE MARCHE
1	**1330024**	100	3/8" NPT	PAVONI
1	**1330019**	100	3/8" NPT	CIMBALI - FAEMA - SPAZIALE
2	**1330016**	200	3/8" NPT	ALL BRANDS - TUTTE LE MARCHE
3	**1330033**	180	3/8" NPT	CASADIO - CIMBALI - FAEMA
4	**1330011**	200	3/8" NPT	FAEMA
5	**1330017**	150	3/8" NPT	CASADIO - CIMBALI - FAEMA

POMPE VOLUMETRICHE NUERT
ROTARY VANE PUMPS NUERT
VERDRÄNGERPUMPEN NUERT
BOMBAS VOLUMÉTRICAS NUERT

1

2

3

4

Photo	LF Code	Flow rate (l/h)	Connections (ø)	Suitable for
1	**1330203**	50	3/8"	ALL BRANDS - TUTTE LE MARCHE
1	**1330206**	200	3/8"	ALL BRANDS - TUTTE LE MARCHE
1	**1330201**	100	3/8" NPT	ALL BRANDS - TUTTE LE MARCHE
1	**1330202**	200	3/8" NPT	ALL BRANDS - TUTTE LE MARCHE
1	**1330900**	200	3/8"	RANCILIO 10705960
2	**1330205**	100	3/8"	ALL BRANDS - TUTTE LE MARCHE
2	**1330204**	200	3/8"	ALL BRANDS - TUTTE LE MARCHE
3	**1330200**	150	3/8"	CASADIO - CIMBALI - FAEMA
4	**1330218**	180	3/8"	CASADIO - CIMBALI - FAEMA

POMPE VOLUMETRICHE ODE
VOLUMETRIC PUMPS ODE
VERDRÄNGERPUMPEN ODE
BOMBAS VOLUMÉTRICAS ODE

1

Photo	LF Code	Flow rate (l/h)	Connections (ø)	Suitable for
1	**1330040**	150	3/8" TECNOPOLIMERO	ALL BRANDS - TUTTE LE MARCHE

POMPE VOLUMETRICHE ROTOFLOW
ROTARY VANE PUMPS ROTOFLOW
VERDRÄNGERPUMPEN ROTOFLOW
BOMBAS VOLUMÉTRICAS ROTOFLOW

1

2

3

Photo	LF Code	Flow rate (l/h)	Connections (ø)	Suitable for
1	**1330051**	50/100	3/8"	---
2	**1330052**	100/200	3/8" NPT	---
3	**1330028**	---	1/8" NPT	MARZOCCO

POMPE VOLUMETRICHE CASADIO-CIMBALI-FAEMA
ROTARY VANE PUMPS CASADIO-CIMBALI-FAEMA
VERDRÄNGERPUMPEN CASADIO-CIMBALI-FAEMA
BOMBAS VOLUMÉTRICAS CASADIO-CIMBALI-FAEMA

1 - ORIGINAL

2 - SUITABLE - NUERT

3 - SUITABLE PROCON

4 - SUITABLE ROTOFLOW

5 - SUITABLE NUERT

Photo	LF Code	Flow rate (l/h)	Connections (ø)	Notes	Suitable for
1	**1330018**	180	3/8"	ORIGINAL - ORIGINALE	CASADIO - CIMBALI - FAEMA
2	**1330218**	180	3/8"	NUERT INOX	CASADIO - CIMBALI - FAEMA
3	**1330033**	180	3/8"	PROCON	CASADIO - CIMBALI - FAEMA
4	**1330031**	150	3/8"	ROTOFLOW	CASADIO - CIMBALI - FAEMA
5	**1330200**	150	3/8"	NUERT	CASADIO - CIMBALI - FAEMA

GIUNTI POMPANTE/MOTORE
PUMP/MOTOR COUPLINGS
PUMPEN- UND MOTORKUPPLUNGEN
ACOPLAMIENTOS BOMBA/MOTOR

1

2

3

4

Photo	LF Code	Notes	Suitable for
1	**1191001**	ø 40 mm	CIMBALI - FAEMA
2	**1191003**	ø 40 mm	CASADIO - CIMBALI - FAEMA
3	**1191004**	ø 35 mm	CIMBALI - FAEMA
4	**1191002**	ø 40 mm	CASADIO - CIMBALI - FAEMA
4	**1191005**	ø 35 mm	CIMBALI - FAEMA

GIUNTI POMPANTE/MOTORE
PUMP/MOTOR COUPLINGS
PUMPEN- UND MOTORKUPPLUNGEN
ACOPLAMIENTOS BOMBA/MOTOR

1

2

3

4

Photo	LF Code	Suitable for
1	**1191012**	---
2	**1191011**	BRASILIA
3	**1191016**	---
4	**1191006**	ASTORIA/CMA - WEGA

POMPE VOLUMETRICHE ACCESSORI
ROTARY VANE PUMPS ACCESSORIES
VERDRÄNGERPUMPEN ZUBEHÖR
BOMBAS VOLUMÉTRICAS ACCESORIOS

1

2

3

4

5

Photo	LF Code	Description
1	**1168011**	STAINLESS STEEL CLAMP - FASCETTA INOX
2	**1160700**	FILTER ø 3/8"Mx3/8"M - FILTRO ø 3/8"Mx3/8"M
3	**1349284**	FILTER ø 3/8"Mx3/8"F - FILTRO ø 3/8"Mx3/8"F
4	**1349082**	FILTER ø 3/8"Mx3/8"M - FILTRO ø 3/8"Mx3/8"M
5	**1349268**	FILTER ø 3/8"Mx3/8"M - FILTRO ø 3/8"Mx3/8"M

Portafiltri macchine caffè
Filter holders for coffee machines
Siebträger für Kaffeemaschinen
Portafiltros máquinas café

PORTAFILTRI ASCASO
FILTER HOLDERS ASCASO
SIEBTRÄGER ASCASO
PORTAFILTROS ASCASO

1

2

Photo	LF Code	Wings	Knob	Spouts	Filter	Spring	Suitable for	For machine model
1	**5083000**	7 mm	M10	---	NO	NO	ASCASO I..690	BASIC - ARC - DREAM - ELIPSE
2	**1165238**	6 mm	M10	1/8	NO	NO	ASCASO I...60	BASIC - ARC - DREAM - ELIPSE

PORTAFILTRI ASTORIA/CMA
FILTER HOLDERS ASTORIA/CMA
SIEBTRÄGER ASTORIA/CMA
PORTAFILTROS ASTORIA/CMA

1 - ORIGINAL

2 - SUITABLE

3 - ORIGINAL

4 - SUITABLE

5

Photo	LF Code	Wings	Knob	Spouts	Filter	Spring	Suitable for	For machine model
1	**1165076**	7 mm	M12	3/8	NO	NO	ASTORIA/CMA 27311056	CALYPSO - PLUS4YOU
2	**1165116**	7 mm	M12	3/8	NO	NO	ASTORIA/CMA 27311056	CALYPSO - PLUS4YOU
3	**1165079**	7 mm	M12	3/8	NO	NO	ASTORIA/CMA 27311057	CALYPSO - PLUS4YOU
4	**1165115**	7 mm	M12	3/8	NO	NO	ASTORIA/CMA 27311057	CALYPSO - PLUS4YOU
5	**1165114**	7 mm	M12	3/8	NO	NO	ASTORIA/CMA	CALYPSO - PLUS4YOU

PORTAFILTRI ASTORIA/CMA
FILTER HOLDERS ASTORIA/CMA
SIEBTRÄGER ASTORIA/CMA
PORTAFILTROS ASTORIA/CMA

1

2

3

4

5

Photo	LF Code	Wings	Knob	Spouts	Filter	Spring	Suitable for	For machine model
1	**1165310**	6 mm	M12	3/8	7 gr	YES	ASTORIA/CMA	ALL OTHER MODELS - TUTTI GLI ALTRI MODELLI
2	**1165311**	6 mm	M12	3/8	14 gr	YES	ASTORIA/CMA	ALL OTHER MODELS - TUTTI GLI ALTRI MODELLI
3	**1165013**	6 mm	M12	3/8	NO	NO	ASTORIA/CMA 27311000	ALL OTHER MODELS - TUTTI GLI ALTRI MODELLI
4	**2106160**	6 mm	M12	3/8	NO	NO	ASTORIA/CMA 27311000	ALL OTHER MODELS - TUTTI GLI ALTRI MODELLI
5	**1165006**	6 mm	M12	3/8	NO	NO	ASTORIA/CMA 27304	ALL OTHER MODELS - TUTTI GLI ALTRI MODELLI

PORTAFILTRI ASTORIA/CMA
FILTER HOLDERS ASTORIA/CMA
SIEBTRÄGER ASTORIA/CMA
PORTAFILTROS ASTORIA/CMA

1

2

3

4

5

6

Photo	LF Code	Wings	Knob	Spouts	Filter	Spring	Suitable for	For machine model
1	**1165230**	6 mm	M12	3/8	YES	YES	ASTORIA CMA 83270022R	GLORIA - GLORIA R12 - PERLA 4D - RAPALLO - RAPALLO AL
2	**1165231**	6 mm	M12	3/8	YES	YES	ASTORIA CMA 83270023R	GLORIA - GLORIA R12 - PERLA 4D - RAPALLO - RAPALLO AL
3	**2106160**	6 mm	M12	3/8	NO	NO	ASTORIA CMA	GLORIA - GLORIA R12 - PERLA 4D - RAPALLO - RAPALLO AL
4	**5078990**	7 mm	M12	3/8	YES	YES	ASTORIA CMA 83270024R	GLORIA - GLORIA R12 - PERLA 4D - RAPALLO - RAPALLO AL
5	**1162026**	7 mm	M12	3/8	YES	YES	ASTORIA CMA 83270025R	GLORIA - GLORIA R12 - PERLA 4D - RAPALLO - RAPALLO AL
6	**1165114**	7 mm	M12	3/8	NO	NO	ASTORIA CMA	GLORIA - GLORIA R12 - PERLA 4D - RAPALLO - RAPALLO AL

PORTAFILTRI BARISTAPRO
FILTER HOLDERS BARISTAPRO
SIEBTRÄGER BARISTAPRO
PORTAFILTROS BARISTAPRO

1

2

3

4

Photo	LF Code	Wings	Knob	Spouts	Filter	Spring	Suitable for	Notes
1	**1165252**	6.6 mm	M12	3/8	NO	NO	MARZOCCO	NANOQUARTZ
2	**1165255**	6.6 mm	M12	3/8	NO	NO	MARZOCCO INCREASED/MAGGIORATO	NANOQUARTZ
3	**1165253**	5.9 mm	M10	3/8	NO	NO	MARZOCCO SLOPING/INCLINATO	NANOQUARTZ
4	**1165254**	7.0 mm	M10	3/8	NO	NO	NUOVA SIMONELLI - VICTORIA ARDUINO	NANOQUARTZ

PORTAFILTRI BEZZERA
FILTER HOLDERS BEZZERA
SIEBTRÄGER BEZZERA
PORTAFILTROS BEZZERA

1

2

3

4

Photo	LF Code	Wings	Knob	Spouts	Filter	Spring	Suitable for	For machine model
1	**1165006**	6 mm	M12	3/8	NO	NO	BEZZERA 5286001CM	B2000 - B2006 - B2009
2	**1165061**	6.3 mm	M12	3/8	NO	NO	BEZZERA 7479930	BZ07 - GALATEA - GIULIA - UNICA
3	**1165131**	5.5 mm	M12	3/8	NO	NO	BEZZERA 5286016TW	BZ07 - BZ09 - BZ10 - BZ13 - B2013 - B6000 - GALATEA
4	**1165128**	5.5 mm	M12	3/8	NO	NO	BEZZERA 5286011CM	B2000AL - B2006AL

PORTAFILTRI BFC
FILTER HOLDERS BFC
SIEBTRÄGER BFC
PORTAFILTROS BFC

1 2 3 4 5

Photo	LF Code	Wings	Knob	Spouts	Filter	Spring	Suitable for	For machine model
1	**1165300**	6.3 mm	M12	3/8	7 gr	YES	BFC	ALL MODELS - TUTTI I MODELLI
2	**1165301**	6.3 mm	M12	3/8	14 gr	YES	BFC	ALL MODELS - TUTTI I MODELLI
3	**1165061**	6.3 mm	M12	3/8	NO	NO	BFC 4650100	ALL MODELS - TUTTI I MODELLI
4	**1165064**	6.3 mm	M12	3/8	NO	NO	BFC 4650108	ALL MODELS - TUTTI I MODELLI
5	**1165006**	6.0 mm	M12	3/8	NO	NO	BFC 4650120	CLASSICA LEVA

PORTAFILTRI BIALETTI
FILTER HOLDERS BIALETTI
SIEBTRÄGER BIALETTI
PORTAFILTROS BIALETTI

1 2 3 4

Photo	LF Code	Wings	Knob	Spouts	Filter	Spring	Suitable for	For machine model
1	**1165236**	5.5 mm	---	---	NO	YES	BIALETTI 912410061	MOKONA CF40
2	**1165235**	5 mm	---	---	---	---	BIALETTI 912990520	MOKONA CF40
3	**1165239**	5 mm	---	---	---	---	BIALETTI 912410080	MOKONA CF40
4	**1165240**	---	---	---	---	---	BIALETTI 912430130	MOKISSIMA CF43

PORTAFILTRI BIANCHI
FILTER HOLDERS BIANCHI
SIEBTRÄGER BIANCHI
PORTAFILTROS BIANCHI

1 2 3 4 5

Photo	LF Code	Wings	Knob	Spouts	Filter	Spring	Suitable for	For machine model
1	**1165110**	6.3 mm	M12	3/8	NO	NO	BIANCHI 12047711	SARA - SOFIA
2	**1165111**	6.3 mm	M12	3/8	NO	NO	BIANCHI 12047721	SARA - SOFIA
3	**1165064**	6.3 mm	M12	3/8	NO	NO	BIANCHI	SARA - SOFIA
4	**1165113**	6 mm	M12	3/8	NO	NO	BIANCHI 12049210	LUCIA
5	**1165112**	6 mm	M12	3/8	NO	NO	BIANCHI 12049310	LUCIA

PORTAFILTRI BRASILIA
FILTER HOLDERS BRASILIA
SIEBTRÄGER BRASILIA
PORTAFILTROS BRASILIA

1

2

3

4

Photo	LF Code	Wings	Knob	Spouts	Filter	Spring	Suitable for	For machine model
1	**1165003**	7 mm	M12	3/8	NO	YES	BRASILIA 06396.8.00.09	CENTURY - PORTOFINO - GRADISCA
2	**1165022**	7 mm	M12	3/8	NO	NO	BRASILIA 21666.0.10.04	CENTURY - PORTOFINO - GRADISCA
3	**1165103**	5.2 mm	M12	3/8	NO	NO	BRASILIA 06668.8.00.09	FIRENZE - PORTOFINO - ROMA - 105
4	**1165098**	5.2 mm	M12	3/8	NO	NO	BRASILIA 05016.8.00.09	FIRENZE - PORTOFINO - ROMA - 105

PORTAFILTRI BRUGNETTI/AURORA
FILTER HOLDERS BRUGNETTI/AURORA
SIEBTRÄGER BRUGNETTI/AURORA
PORTAFILTROS BRUGNETTI/AURORA

1

2

Photo	LF Code	Wings	Knob	Spouts	Filter	Spring	Suitable for	For machine model
1	**1165022**	7 mm	M12	3/8	NO	NO	BRUGNETTI 000047	ALL MODELS - TUTTI I MODELLI
2	**1165088**	6.6 mm	M12	3/8	NO	NO	BRUGNETTI 000047.57	ALL MODELS - TUTTI I MODELLI (NEW)

PORTAFILTRI CARIMALI
FILTER HOLDERS CARIMALI
SIEBTRÄGER CARIMALI
PORTAFILTROS CARIMALI

1

Photo	LF Code	Wings	Knob	Spouts	Filter	Spring	Suitable for	For machine model
1	**1165011**	6 mm	M10	3/8	NO	NO	CARIMALI 22.00804.CR	ALL MODELS - TUTTI I MODELLI

PORTAFILTRI CASADIO
FILTER HOLDERS CASADIO
SIEBTRÄGER CASADIO
PORTAFILTROS CASADIO

1 - ORIGINAL

2 - ORIGINAL

3 - SUITABLE

4 - SUITABLE

5

Photo	LF Code	Wings	Knob	Spouts	Filter	Spring	Suitable for	For machine model
1	**1165096**	6.3 mm	M10	M16	YES	YES	CASADIO 958577020	DIECIA - DIECIS - DODICIA - DODICIS - VENTI
2	**1165097**	6.3 mm	M10	M16	YES	YES	CASADIO 958578020	DIECIA - DIECIS - DODICIA - DODICIS - VENTI
3	**5076313**	6.3 mm	M10	M16	NO	NO	CASADIO	DIECIA - DIECIS - DODICIA - DODICIS - VENTI
4	**5074187**	6.3 mm	M10	M16	NO	NO	CASADIO	DIECIA - DIECIS - DODICIA - DODICIS - VENTI
5	**1165142**	6.3 mm	M10	M16	NO	NO	CASADIO 457355017	DIECIA - DIECIS - DODICIA - DODICIS - VENTI

PORTAFILTRI CIMBALI
FILTER HOLDERS CIMBALI
SIEBTRÄGER CIMBALI
PORTAFILTROS CIMBALI

1

2

3

4

5

6

Photo	LF Code	Wings	Knob	Spouts	Filter	Spring	Suitable for	For machine model
1	**1165306**	5.5 mm	M10	SCREW - A VITE	7 gr	YES	CIMBALI 458-981-000	M21 - M30 - M31 - M32
2	**1165307**	5.5 mm	M10	SCREW - A VITE	14 gr	YES	CIMBALI 458-980-000	M21 - M30 - M31 - M32
3	**1165016**	5.5 mm	M10	SCREW - A VITE	NO	NO	CIMBALI 458-159-007	M21 - M30 - M31 - M32
4	**1165308**	5.5 mm	M10	3/8	7 gr	YES	CIMBALI 537-027-100	M24 - M28 - M29 - M30 - M31 - M32 - M39
5	**1165309**	5.5 mm	M10	3/8	14 gr	YES	CIMBALI 537-027-200	M24 - M28 - M29 - M30 - M31 - M32 - M39
6	**1165017**	5.5 mm	M10	3/8	NO	NO	CIMBALI 537-027-200	M24 - M28 - M29 - M30 - M31 - M32 - M39
6	**1165065**	6.2 mm	M10	M16	NO	NO	CIMBALI 457-355-007	M272008 - M100

PORTAFILTRI CIMBALI
FILTER HOLDERS CIMBALI
SIEBTRÄGER CIMBALI
PORTAFILTROS CIMBALI

1

2

3

4

Photo	LF Code	Wings	Knob	Spouts	Filter	Spring	Suitable for	For machine model
1	**1165147**	6.5 mm	M10	M16	NO	YES	CIMBALI 457-891-020	M24 - M39 - M39GT
2	**1165148**	6.5 mm	M10	M16	NO	YES	CIMBALI 957-702-010	M24 - M39 - M39GT
3	**1165065**	6.5 mm	M10	M16	NO	NO	CIMBALI 457-355-007	M24 - M39 - M39GT - M100
4	**1165142**	6.5 mm	M10	M16	NO	NO	CIMBALI 457-355-007	M27 2008

PORTAFILTRI CIMBALI
FILTER HOLDERS CIMBALI
SIEBTRÄGER CIMBALI
PORTAFILTROS CIMBALI

1

2

3

4

5

6

Photo	LF Code	Wings	Knob	Spouts	Filter	Spring	Suitable for	For machine model
1	**5076313**	6.4 mm	M10	M16	NO	NO	CIMBALI 958-577-070F	M27 2008
2	**5074187**	6.4 mm	M10	M16	NO	NO	CIMBALI 958-578-070F	M27 2008
3	**1165206**	6.2 mm	M10	M16	NO	YES	CIMBALI 947-882-030	M100
4	**1165207**	6.2 mm	M10	M16	NO	YES	CIMBALI 947-881-030	M100
5	**1165204**	6.2 mm	M10	M16	NO	YES	CIMBALI 947-751-040	M100
6	**1165205**	6.2 mm	M10	M16	NO	YES	CIMBALI 947-752-040	M100

PORTAFILTRI CONTI
FILTER HOLDERS CONTI
SIEBTRÄGER CONTI
PORTAFILTROS CONTI

1

2

3

Photo	LF Code	Wings	Knob	Spouts	Filter	Spring	Suitable for	For machine model
1	**1165019**	7.4 mm	M12	3/8	NO	YES	CONTI	---
2	**1165020**	7.4 mm	M12	3/8	NO	YES	CONTI	---
3	**1165101**	7.4 mm	M12	3/8	NO	NO	CONTI	---

PORTAFILTRI DALLA CORTE
FILTER HOLDERS DALLA CORTE
SIEBTRÄGER DALLA CORTE
PORTAFILTROS DALLA CORTE

1

2

3

Photo	LF Code	Wings	Knob	Spouts	Filter	Spring	Suitable for	For machine model
1	**7107488**	8.2 mm	M10	3/8	NO	NO	DALLA CORTE A-MC-0003	EVOLUTION
2	**7107489**	8.2 mm	M10	3/8	NO	NO	DALLA CORTE A-MC-0004	EVOLUTION
3	**1165133**	8.2 mm	M10	3/8	NO	NO	DALLA CORTE B-MC-0037	EVOLUTION

PORTAFILTRI DELONGHI
FILTER HOLDERS DELONGHI
SIEBTRÄGER DELONGHI
PORTAFILTROS DELONGHI

1

2

3

4

Photo	LF Code	Wings	Knob	Spouts	Filter	Spring	Suitable for	For machine model
1	**1165212**	5.0 mm	---	---	NO	YES	DELONGHI 7313286469	ECI341
2	**1165211**	5.5 mm	---	---	YES	---	DELONGHI 5513200369	EC680
3	**1165213**	5.6 mm	---	---	NO	YES	DELONGHI 7313286019	EC820.B - EC850.M - EC860.M
4	**1165217**	5.3 mm	---	---	YES	---	DELONGHI 5513200349	ECZ351.BG - ECZ351.BK - ECZ351.GY - ECZ351.W

PORTAFILTRI DELONGHI
FILTER HOLDERS DELONGHI
SIEBTRÄGER DELONGHI
PORTAFILTROS DELONGHI

1

2

3

4

Photo	LF Code	Wings	Knob	Spouts	Filter	Spring	Suitable for	For machine model
1	**5059585**	4.5 mm	---	---	NO	---	DELONGHI 7332173100	BCO260 - BCO261
2	**1165121**	5 mm	---	---	NO	---	DELONGHI 7313280779	ECOV310AZ - EC155 - EC300M
3	**1165120**	---	---	---	---	---	DELONGHI 534714	EC155 - EC300M
4	**1165122**	---	---	---	---	---	DELONGHI 5313217311	ECOV310AZ

PORTAFILTRI ECM
FILTER HOLDERS ECM
SIEBTRÄGER ECM
PORTAFILTROS ECM

1

Photo	LF Code	Wings	Knob	Spouts	Filter	Spring	Suitable for	For machine model
1	**1165022**	7 mm	M12	3/8	NO	NO	ECM	ALL MODELS - TUTTI I MODELLI

PORTAFILTRI ECM MANUFACTURE
FILTER HOLDERS ECM MANUFACTURE
SIEBTRÄGER ECM MANUFACTURE
PORTAFILTROS ECM MANUFACTURE

1

2

Photo	LF Code	Wings	Knob	Spouts	Filter	Spring	Suitable for	For machine model
1	**1165137**	5.5 mm	M12	3/8	NO	YES	ECM MANUFACTURE 89424	CLASSIKA II - ELEKTRONIKA II PROFI - ELEKTRONIKA PROFI
2	**1165138**	5.5 mm	M12	3/8	NO	YES	ECM MANUFACTURE 89425	CLASSIKA II - ELEKTRONIKA II PROFI - ELEKTRONIKA PROFI

PORTAFILTRI ELEKTRA
FILTER HOLDERS ELEKTRA
SIEBTRÄGER ELEKTRA
PORTAFILTROS ELEKTRA

1

2

3

4

5

6

Photo	LF Code	Wings	Knob	Spouts	Filter	Spring	Suitable for	For machine model
1	**1165071**	6 mm	M12	3/8	NO	YES	ELEKTRA 03436039+00526021	CLASSICBARLUME - MODERN - SIXTIES
2	**1165072**	6 mm	M12	3/8	NO	YES	ELEKTRA 03435039+00526021	CLASSICBARLUME - MODERN - SIXTIES
3	**1165073**	6 mm	M12	3/8	NO	YES	ELEKTRA 03434039+00526021	CLASSICBARLUME - KAPPA - MODERN
4	**1165074**	6 mm	M12	3/8	NO	YES	ELEKTRA 03433039+00526021	CLASSICBARLUME - KAPPA - MODERN
5	**1165070**	6 mm	M12	3/8	NO	NO	ELEKTRA 02152021	ALL MODELS - TUTTI I MODELLI
6	**1165007**	5.5 mm	M8	---	NO	NO	ELEKTRA 00187021	MICROCASA

PORTAFILTRI EXPOBAR
FILTER HOLDERS EXPOBAR
SIEBTRÄGER EXPOBAR
PORTAFILTROS EXPOBAR

1

2

3

Photo	LF Code	Wings	Knob	Spouts	Filter	Spring	Suitable for	For machine model
1	**3165001**	6 mm	M12	3/8	YES	YES	EXPOBAR 75001500	ALL MODELS - TUTTI I MODELLI
2	**3165002**	6 mm	M12	3/8	YES	YES	EXPOBAR 75002500	ALL MODELS - TUTTI I MODELLI
3	**1165061**	6.3 mm	M12	3/8	NO	NO	EXPOBAR 75000110	ALL MODELS - TUTTI I MODELLI

PORTAFILTRI FAEMA
FILTER HOLDERS FAEMA
SIEBTRÄGER FAEMA
PORTAFILTROS FAEMA

1 - ORIGINAL

2 - ORIGINAL

3

4

5

6

Photo	LF Code	Wings	Knob	Spouts	Filter	Spring	Suitable for	For machine model
1	**1165025**	6.3 mm	SCREW - A VITE	3/8	YES	YES	FAEMA 993711010	E61 - E61JUBILE'
2	**1165024**	6.3 mm	SCREW - A VITE	3/8	YES	YES	FAEMA 993710010	E61 - E61JUBILE'
3	**1165014**	7 mm	SCREW - A VITE	3/8	NO	NO	FAEMA	E61 - E61JUBILE'
4	**5014055**	7 mm	M10	3/8	6 gr	YES	FAEMA 457889020	E91-E92-E97-E98-DUE-SMART
5	**5014054**	7 mm	M10	3/8	12 gr	YES	FAEMA 457888020	E91-E92-E97-E98-DUE-SMART
6	**1165015**	7 mm	M10	3/8	NO	NO	FAEMA	E91-E92-E97-E98-DUE-SMART
6	**1165022**	7 mm	M12	3/8	NO	NO	FAEMA	E91-E92-E97-E98-DUE-SMART

PORTAFILTRI FAEMA
FILTER HOLDERS FAEMA
SIEBTRÄGER FAEMA
PORTAFILTROS FAEMA

1

2

3

4

5

Photo	LF Code	Wings	Knob	Spouts	Filter	Spring	Suitable for	For machine model
1	**1165143**	6.4 mm	M10	M16	NO	YES	FAEMA 457899040	EMBLEMA
2	**1165144**	6.4 mm	M10	M16	NO	YES	FAEMA 457898040	EMBLEMA
3	**1165145**	6.4 mm	M10	M16	NO	YES	FAEMA 927705000	EMBLEMA
4	**1165146**	6.4 mm	M10	M16	NO	YES	FAEMA 927706000	EMBLEMA
5	**1165142**	6.4 mm	M10	M16	NO	NO	FAEMA 457355017	CARISMA - DUE SMART - EMBLEMA - ENOVA - E92 ELITE

PORTAFILTRI FAEMA
FILTER HOLDERS FAEMA
SIEBTRÄGER FAEMA
PORTAFILTROS FAEMA

1

2

3

4

Photo	LF Code	Wings	Knob	Spouts	Filter	Spring	Suitable for	For machine model
1	**1165169**	6.4 mm	M10	M16	NO	YES	FAEMA 970748030	TEOREMA
2	**1165203**	6.4 mm	M10	M16	NO	YES	FAEMA 970749030	TEOREMA
3	**5076313**	6.4 mm	M10	M16	NO	NO	FAEMA	CARISMA - DUE SMART - EMBLEMA - ENOVA - E92 ELITE - STYLEMA
4	**5074187**	6.4 mm	M10	M16	NO	NO	FAEMA	CARISMA - DUE SMART - EMBLEMA - ENOVA - E92 ELITE - STYLEMA

PORTAFILTRI FIAMMA RST
FILTER HOLDERS FIAMMA RST
SIEBTRÄGER FIAMMA RST
PORTAFILTROS FIAMMA RST

1

2

3

Photo	LF Code	Wings	Knob	Spouts	Filter	Spring	Suitable for	For machine model
1	**1165110**	6.3 mm	M12	3/8	NO	YES	FIAMMA	ATLANTIC - MARINA - MINIBAR - PRESTIGE
2	**1165111**	6.3 mm	M12	3/8	NO	YES	FIAMMA	ATLANTIC - MARINA - MINIBAR - PRESTIGE
3	**1165064**	6.3 mm	M12	3/8	NO	NO	FIAMMA 5.0.000.0657	ATLANTIC - MARINA - MINIBAR - PRESTIGE

PORTAFILTRI FIORENZATO CS
FILTER HOLDERS FIORENZATO CS
SIEBTRÄGER FIORENZATO CS
PORTAFILTROS FIORENZATO CS

1

2

3

4

Photo	LF Code	Wings	Knob	Spouts	Filter	Spring	Suitable for	For machine model
1	**1165040**	6.5 mm	M12	3/8	7 gr	YES	FIORENZATO CS A2200078	ALL MODELS - TUTTI I MODELLI
2	**1165042**	6.5 mm	M12	3/8	14 gr	YES	FIORENZATO CS A2200079	ALL MODELS - TUTTI I MODELLI
3	**1165061**	6.5 mm	M12	3/8	NO	NO	FIORENZATO CS	ALL MODELS - TUTTI I MODELLI
4	**5058712**	5.6 mm	M12	3/8	NO	NO	FIORENZATO CS A2200082	PIAZZA SAN MARCO

PORTAFILTRI FRACINO
FILTERHOLDERS FRACINO
SIEBTRÄGER FRACINO
PORTAFILTROS FRACINO

1

2

Photo	LF Code	Wings	Knob	Spouts	Filter	Spring	Suitable for	For machine model
1	**1165135**	7 mm	---	3/8	6 gr	YES	FRACINO FC105CH	BAMBINO - CONTEMPO - HEAVENLY - ROMANO
2	**1165136**	7 mm	---	3/8	14 gr	YES	FRACINO FC105CHA	BAMBINO - CONTEMPO - HEAVENLY - ROMANO

PORTAFILTRI FUTURMAT
FILTER HOLDERS FUTURMAT
SIEBTRÄGER FUTURMAT
PORTAFILTROS FUTURMAT

1

2

3

4

5

Photo	LF Code	Wings	Knob	Spouts	Filter	Spring	Suitable for	For machine model
1	**1165022**	7 mm	M12	3/8	NO	NO	FUTURMAT 11252202	ALL MODELS - TUTTI I MODELLI
2	**1165036**	6.5 mm	M8	3/8	NO	NO	FUTURMAT 08103510	ALL MODELS - TUTTI I MODELLI
3	**5057230**	6.5 mm	M12	3/8	NO	YES	FUTURMAT 08485800	NEW MODELS - NUOVI MODELLI
4	**5034110**	6.5 mm	M12	3/8	NO	YES	FUTURMAT 08485900	NEW MODELS - NUOVI MODELLI
5	**5055624**	6.5 mm	M12	3/8	NO	NO	FUTURMAT 08480050	NEW MODELS - NUOVI MODELLI

PORTAFILTRI GAGGIA
FILTER HOLDERS GAGGIA
SIEBTRÄGER GAGGIA
PORTAFILTROS GAGGIA

1

2

3

4

Photo	LF Code	Wings	Knob	Spouts	Filter	Spring	Suitable for	For machine model
1	**1165109**	7 mm	M10	3/8	NO	NO	GAGGIA 8027085000	DECO - D90 - E90 - GD - GE - LCD - XD - XE
2	**1165108**	7 mm	M10	3/8	NO	NO	GAGGIA 8027086000	DECO - D90 - E90 - GD - GE - LCD - XD - XE
3	**1165026**	7 mm	M10	3/8	NO	NO	GAGGIA WGA26G0104	DECO - D90 - E90 - GD - GE - LCD - XD - XE
4	**1165018**	4.0 mm	M12	3/8	NO	YES	GAGGIA S395307	G105 - G106

PORTAFILTRI GAGGIA
FILTER HOLDERS GAGGIA
SIEBTRÄGER GAGGIA
PORTAFILTROS GAGGIA

1

2

3

4

5

6

Photo	LF Code	Wings	Knob	Spouts	Filter	Spring	Suitable for	For machine model
1	**1165179**	---	---	---	YES	YES	GAGGIA 11031389	CAREZZA DELUXE
2	**1165210**	---	---	---	YES	YES	GAGGIA 11029573	GRAN GAGGIA
2	**1165044**	---	---	---	YES	YES	GAGGIA 226551850	CUBIKA PLUS
3	**1165027**	7 mm	SCREW - A VITE	3/8	NO	YES	GAGGIA DY0004/A	BABY
4	**5059488**	7 mm	SCREW - A VITE	3/8	NO	NO	GAGGIA 6301002000	BABY
5	**5047148**	7 mm	SCREW - A VITE	3/8	NO	NO	GAGGIA 8332018000	NEWBABY06
6	**5052121**	---	---	---	---	---	GAGGIA 4301007000	NEWBABY06

PORTAFILTRI GAGGIA SPAGNA
FILTER HOLDERS GAGGIA SPAGNA
SIEBTRÄGER GAGGIA SPAGNA
PORTAFILTROS GAGGIA SPAGNA

1

2

3

4

5

Photo	LF Code	Wings	Knob	Spouts	Filter	Spring	Suitable for	For machine model
1	**1165022**	7 mm	M12	3/8	NO	NO	GAGGIA SPAGNA 11252202	ALL MODELS - TUTTI I MODELLI
2	**1165036**	6.5 mm	M8	3/8	NO	NO	GAGGIA SPAGNA 08103510	ALL MODELS - TUTTI I MODELLI
3	**5057230**	6.5 mm	M12	3/8	NO	YES	GAGGIA SPAGNA 08485800	NEW MODELS - NUOVI MODELLI
4	**5034110**	6.5 mm	M12	3/8	NO	YES	GAGGIA SPAGNA 08485900	NEW MODELS - NUOVI MODELLI
5	**5055624**	6.5 mm	M12	3/8	NO	NO	GAGGIA SPAGNA 08480050	NEW MODELS - NUOVI MODELLI

PORTAFILTRI GRIMAC
FILTER HOLDERS GRIMAC
SIEBTRÄGER GRIMAC
PORTAFILTROS GRIMAC

1

2

3

4

Photo	LF Code	Wings	Knob	Spouts	Filter	Spring	Suitable for	For machine model
1	**1165022**	7 mm	M12	3/8	NO	NO	GRIMAC 1200100021-GR767	ZOLAI - ZOLAII - TEN - TWENTY - ECLISSE
2	**1165040**	6.5 mm	M12	3/8	7 gr	YES	GRIMAC A2200078	G11
3	**1165042**	6.5 mm	M12	3/8	14 gr	YES	GRIMAC A2200079	G11
4	**1165061**	6.5 mm	M12	3/8	NO	NO	GRIMAC	G11

PORTAFILTRI ISOMAC
FILTER HOLDERS ISOMAC
SIEBTRÄGER ISOMAC
PORTAFILTROS ISOMAC

1

2

Photo	LF Code	Wings	Knob	Spouts	Filter	Spring	Suitable for	For machine model
1	**1165141**	7.3 mm	M12	3/8	NO	YES	ISOMAC IS000711	MAVERICK
2	**1165061**	6.3 mm	M12	3/8	NO	NO	ISOMAC IS000740	MILLENNIUM - MONDIALE - TEA - VENUS - ZAFFIRO

PORTAFILTRI ITALCREM
FILTER HOLDERS ITALCREM
SIEBTRÄGER ITALCREM
PORTAFILTROS ITALCREM

1

2

3

4

5

Photo	LF Code	Wings	Knob	Spouts	Filter	Spring	Suitable for	For machine model
1	**1165022**	7 mm	M12	3/8	NO	NO	ITALCREM 11252202	ALL MODELS - TUTTI I MODELLI
2	**1165036**	6.5 mm	M8	3/8	NO	NO	ITALCREM 08103510	ALL MODELS - TUTTI I MODELLI
3	**5057230**	6.5 mm	M12	3/8	NO	YES	ITALCREM 08485800	NEW MODELS - NUOVI MODELLI
4	**5034110**	6.5 mm	M12	3/8	NO	YES	ITALCREM 08485900	NEW MODELS - NUOVI MODELLI
5	**5055624**	6.5 mm	M12	3/8	NO	NO	ITALCREM 08480050	NEW MODELS - NUOVI MODELLI

PORTAFILTRI KRUPS
FILTER HOLDERS KRUPS
SIEBTRÄGER KRUPS
PORTAFILTROS KRUPS

1

2

Photo	LF Code	Wings	Knob	Spouts	Filter	Spring	Suitable for	For machine model
1	**D165001**	---	---	---	---	---	KRUPS MS-622248	XP2240 - XP2280 - XP522010 - XP522010/1P1 - XP5240FR - XP5280
2	**1165209**	---	---	---	---	---	KRUPS MS-622116	KP200010 - KP200410 - KP200510 - KP200610 - KP200810 - KP200910

PORTAFILTRI LAVAZZA
FILTER HOLDERS LAVAZZA
SIEBTRÄGER LAVAZZA
PORTAFILTROS LAVAZZA

1

2

3

4

5

6

Photo	LF Code	Wings	Knob	Spouts	Filter	Spring	Suitable for	For machine model
1	**1165196**	4.2 mm	M12	3/8	YES	YES	LAVAZZA 10084279	LB4600
2	**1165197**	4.2 mm	M12	3/8	YES	YES	LAVAZZA 10084280	LB4600
3	**1165198**	5.0 mm	M12	3/8	YES	YES	LAVAZZA 10065868	LB2800 - LB4700 - LB4700R - LB4701R
4	**1165199**	5.0 mm	M12	3/8	YES	YES	LAVAZZA 10065869	LB2800 - LB4700 - LB4700R - LB4701R
5	**1165200**	5.0 mm	M12	3/8	YES	YES	LAVAZZA 10065960	LB4100 - LB4103
6	**1165201**	5.0 mm	M12	3/8	YES	YES	LAVAZZA 10065961	LB4100 - LB4103

PORTAFILTRI LAVAZZA
FILTER HOLDERS LAVAZZA
SIEBTRÄGER LAVAZZA
PORTAFILTROS LAVAZZA

1

Photo	LF Code	Wings	Knob	Spouts	Filter	Spring	Suitable for	For machine model
1	**1165087**	7.0 mm	---	---	---	---	LAVAZZA 10064393	EP850

PORTAFILTRI MAGISTER
FILTER HOLDERS MAGISTER
SIEBTRÄGER MAGISTER
PORTAFILTROS MAGISTER

1

2

3

Photo	LF Code	Wings	Knob	Spouts	Filter	Spring	Suitable for	For machine model
1	**1165040**	6.3 mm	M12	3/8	YES	YES	MAGISTER 210029	ALL MODELS - TUTTI I MODELLI
2	**1165042**	6.3 mm	M12	3/8	YES	YES	MAGISTER 210030	ALL MODELS - TUTTI I MODELLI
3	**1165061**	6.3 mm	M12	3/8	NO	NO	MAGISTER	ALL MODELS - TUTTI I MODELLI

PORTAFILTRI MAIRALI
FILTER HOLDERS MAIRALI
SIEBTRÄGER MAIRALI
PORTAFILTROS MAIRALI

1

2

3

4

5

Photo	LF Code	Wings	Knob	Spouts	Filter	Spring	Suitable for	For machine model
1	**1165022**	7 mm	M12	3/8	NO	NO	MAIRALI 11252202	ALL MODELS - TUTTI I MODELLI
2	**1165036**	6.5 mm	M8	3/8	NO	NO	MAIRALI 08103510	ALL MODELS - TUTTI I MODELLI
3	**5057230**	6.5 mm	M12	3/8	NO	YES	MAIRALI 08485800	NEW MODELS - NUOVI MODELLI
4	**5034110**	6.5 mm	M12	3/8	NO	YES	MAIRALI 08485900	NEW MODELS - NUOVI MODELLI
5	**5055624**	6.5 mm	M12	3/8	NO	NO	MAIRALI 08480050	NEW MODELS - NUOVI MODELLI

PORTAFILTRI MARCFI-ANCAS
FILTER HOLDERS MARCFI-ANCAS
SIEBTRÄGER MARCFI-ANCAS
PORTAFILTROS MARCFI-ANCAS

1

2

Photo	LF Code	Wings	Knob	Spouts	Filter	Spring	Suitable for	For machine model
1	**1165066**	8 mm	SCREW - A VITE	3/8	NO	NO	MARCFI-ANCAS	---
2	**1165067**	8 mm	SCREW - A VITE	3/8	NO	NO	MARCFI-ANCAS	---

PORTAFILTRI MARZOCCO
FILTER HOLDERS MARZOCCO
SIEBTRÄGER MARZOCCO
PORTAFILTROS MARZOCCO

1

2

Photo	LF Code	Wings	Knob	Spouts	Filter	Spring	Suitable for	For machine model
1	**1165088**	6.6 mm	M12	3/8	NO	NO	MARZOCCO	ALL MODELS - TUTTI I MODELLI
2	**1165029**	5.9 mm	M10	3/8	NO	NO	MARZOCCO	SLANTED KNOB - MANOPOLA INCLINATA

PORTAFILTRI MARZOCCO
FILTER HOLDERS MARZOCCO
SIEBTRÄGER MARZOCCO
PORTAFILTROS MARZOCCO

1

2

3

4

Photo	LF Code	Wings	Knob	Spouts	Filter	Spring	Suitable for	For machine model
1	**1165234**	6.0 mm	M12	---	NO	NO	MARZOCCO L111/1AC	ALL MODELS - TUTTI I MODELLI
2	**5055348**	6.0 mm	M12	---	NO	NO	MARZOCCO L111/2NAC	ALL MODELS - TUTTI I MODELLI
3	**5038168**	6.0 mm	M12	3/8	NO	YES	MARZOCCO L111/1	ALL MODELS - TUTTI I MODELLI
4	**5085061**	6.0 mm	M12	3/8	NO	YES	MARZOCCO L111/2N	ALL MODELS - TUTTI I MODELLI

PORTAFILTRI MCE
FILTER HOLDERS MCE
SIEBTRÄGER MCE
PORTAFILTROS MCE

1

2

3

4

Photo	LF Code	Wings	Knob	Spouts	Filter	Spring	Suitable for	For machine model
1	**1165082**	6.5 mm	M12	3/8	7 gr	YES	MCE	START
2	**1165083**	6.5 mm	M12	3/8	14 gr	YES	MCE	START
3	**1165081**	6.5 mm	M12	3/8	NO	NO	MCE 27311010	START
4	**2106200**	6.5 mm	M12	3/8	NO	NO	MCE 27311010	START

PORTAFILTRI NUOVA SIMONELLI
FILTER HOLDERS NUOVA SIMONELLI
SIEBTRÄGER NUOVA SIMONELLI
PORTAFILTROS NUOVA SIMONELLI

1

2

3

Photo	LF Code	Wings	Knob	Spouts	Filter	Spring	Suitable for	For machine model
1	**1165045**	7 mm	M10	3/8	6 gr	YES	NUOVA SIMONELLI 98005024	APPIA - AURELIA - AURELIAII - PREMIER - PROGRAM
2	**1165055**	7 mm	M10	3/8	12 gr	YES	NUOVA SIMONELLI 98005024	APPIA - AURELIA - AURELIAII - PREMIER - PROGRAM
3	**1165012**	7 mm	M10	3/8	NO	NO	NUOVA SIMONELLI 06200092	APPIA - AURELIA - AURELIAII - PREMIER - PROGRAM

PORTAFILTRI ORCHESTRALE
FILTER HOLDERS ORCHESTRALE
SIEBTRÄGER ORCHESTRALE
PORTAFILTROS ORCHESTRALE

1

2

3

4

Photo	LF Code	Wings	Knob	Spouts	Filter	Spring	Suitable for	For machine model
1	**1165082**	6.5 mm	M12	3/8	7 gr	YES	ORCHESTRALE D27311054	ETNICA-PHONICA
2	**1165083**	6.5 mm	M12	3/8	14 gr	YES	ORCHESTRALE D27311055	ETNICA-PHONICA
3	**1165081**	6.5 mm	M12	3/8	NO	NO	ORCHESTRALE D27311010	ETNICA-PHONICA
4	**2106200**	6.5 mm	M12	3/8	NO	NO	ORCHESTRALE D27311010	ETNICA-PHONICA

Portafiltri macchine caffè
Filter holders for coffee machines
Siebträger für Kaffeemaschinen
Portafiltros máquinas café

PORTAFILTRI PAVONI
FILTER HOLDERS PAVONI
SIEBTRÄGER PAVONI
PORTAFILTROS PAVONI

1

2

3

4

5

Photo	LF Code	Wings	Knob	Spouts	Filter	Spring	Suitable for	For machine model
1	**1165023**	4 mm	M12	3/8	NO	NO	PAVONI 395305R	EUROPICCOLA - PROFESSIONAL
2	**1165018**	4 mm	M12	3/8	NO	YES	PAVONI 395307R	EUROPICCOLA - PROFESSIONAL - STRADIVARI
3	**1165043**	---	---	---	YES	---	PAVONI 0P226551650	ESPRESSOCAPPUCCINO - ESPRESSOSI
4	**1165044**	---	---	---	YES	---	PAVONI 226551850	ESPRESSO - ESPRESSOPLUS - EUROBAR
5	**1165041**	5.6 mm	M12	3/8	NO	NO	PAVONI 31109241	ALL MODELS - TUTTI I MODELLI

PORTAFILTRI PROMAC
FILTER HOLDERS PROMAC
SIEBTRÄGER PROMAC
PORTAFILTROS PROMAC

1

Photo	LF Code	Wings	Knob	Spouts	Filter	Spring	Suitable for	For machine model
1	**1165046**	6 mm	SCREW - A VITE	3/8	NO	NO	PROMAC 20112016	GREEN - COMPACT - CLUB

PORTAFILTRI QUICK MILL
FILTER HOLDERS QUICK MILL
SIEBTRÄGER QUICK MILL
PORTAFILTROS QUICK MILL

1

2

3

4

Photo	LF Code	Wings	Knob	Spouts	Filter	Spring	Suitable for	For machine model
1	**1165040**	6.3 mm	M12	3/8	YES	YES	QUICK MILL OT0970PF1	0980 ANDREJA
2	**1165042**	6.3 mm	M12	3/8	YES	YES	QUICK MILL OT0970PF2	0980 ANDREJA
3	**1165061**	6.3 mm	M12	3/8	NO	NO	QUICK MILL	0980 ANDREJA
4	**1165139**	10 mm	M12	3/8	YES	NO	QUICK MILL OT0800PFC	03035 PEGASO - 0820 - 0835

PORTAFILTRI RANCILIO
FILTER HOLDERS RANCILIO
SIEBTRÄGER RANCILIO
PORTAFILTROS RANCILIO

1 - ORIGINAL

2 - ORIGINAL

3 - SUITABLE

4 - SUITABLE

5

6

Photo	LF Code	Wings	Knob	Spouts	Filter	Spring	Suitable for	For machine model
1	**1160521**	6 mm	SCREW - A VITE	3/8	NO	YES	RANCILIO 10071110	ALL MODELS - TUTTI I MODELLI
2	**1160545**	6 mm	SCREW - A VITE	3/8	NO	YES	RANCILIO 10071120	ALL MODELS - TUTTI I MODELLI
3	**1165621**	6 mm	SCREW - A VITE	3/8	NO	YES	RANCILIO 10071110	ALL MODELS - TUTTI I MODELLI
4	**1165645**	6 mm	SCREW - A VITE	3/8	NO	YES	RANCILIO 10071120	ALL MODELS - TUTTI I MODELLI
5	**1165046**	6 mm	SCREW - A VITE	3/8	NO	NO	RANCILIO 20112011	ALL MODELS - TUTTI I MODELLI
6	**1165030**	6 mm	SCREW - A VITE	3/8	NO	YES	RANCILIO 10070108	SILVIA

PORTAFILTRI RANCILIO
FILTER HOLDERS RANCILIO
SIEBTRÄGER RANCILIO
PORTAFILTROS RANCILIO

1

2

3 - 2009

4 - 2009

Photo	LF Code	Wings	Knob	Spouts	Filter	Spring	Suitable for	For machine model
1	**5076427**	6 mm	SCREW - A VITE	3/8	NO	YES	RANCILIO 10071021	CLASSE10/9/8/7/6 - EPOCA
2	**5077808**	6 mm	SCREW - A VITE	3/8	NO	YES	RANCILIO 10071022	CLASSE10/9/8/7/6 - EPOCA
3	**1165214**	6 mm	SCREW - A VITE - INCLINED	3/8	NO	YES	RANCILIO 10071118	CLASSE11/10/9/8/7/6 - EPOCA - EPOCA NEW
4	**1165215**	6 mm	SCREW - A VITE - INCLINED	3/8	NO	YES	RANCILIO 10071137	CLASSE11/10/9/8/7/6 - EPOCA - EPOCA NEW

PORTAFILTRI RENEKA
FILTER HOLDERS RENEKA
SIEBTRÄGER RENEKA
PORTAFILTROS RENEKA

1

2

3

Photo	LF Code	Wings	Knob	Spouts	Filter	Spring	Suitable for	For machine model
1	**1165061**	6.3 mm	M12	3/8	NO	NO	RENEKA AT7479930	ATALANTE - AMICI
2	**1165064**	6.3 mm	M12	3/8	NO	NO	RENEKA 9215312	MOSAIC
3	**1165048**	9.5 mm	M10	3/8	NO	NO	RENEKA 9004934	LC - VIVA - VIVAS - XLPALLAS

PORTAFILTRI ROYAL
FILTER HOLDERS ROYAL
SIEBTRÄGER ROYAL
PORTAFILTROS ROYAL

1 2 3 4 5

Photo	LF Code	Wings	Knob	Spouts	Filter	Spring	Suitable for	For machine model
1	**1165300**	6.3 mm	M12	3/8	7 gr	YES	ROYAL	ALL MODELS - TUTTI I MODELLI
2	**1165301**	6.3 mm	M12	3/8	14 gr	YES	ROYAL	ALL MODELS - TUTTI I MODELLI
3	**1165061**	6.3 mm	M12	3/8	NO	NO	ROYAL 4650100	ALL MODELS - TUTTI I MODELLI
4	**1165064**	6.3 mm	M12	3/8	NO	NO	ROYAL 4650108	ALL MODELS - TUTTI I MODELLI
5	**1165006**	6.0 MM	M12	3/8	NO	NO	ROYAL 4650120	VALLELUNGA LEVA

PORTAFILTRI SAB ITALIA
FILTER HOLDERS SAB ITALIA
SIEBTRÄGER SAB ITALIA
PORTAFILTROS SAB ITALIA

1 2

Photo	LF Code	Wings	Knob	Spouts	Filter	Spring	Suitable for	For machine model
1	**1165068**	6.3 mm	M10	3/8	YES	YES	SAB ITALIA SVTMP014	ELLIPSE - E96 - JOLLY - MODERNA
2	**1165069**	6.3 mm	M10	3/8	YES	YES	SAB ITALIA SVTMP015	ELLIPSE - E96 - JOLLY - MODERNA

PORTAFILTRI SAECO
FILTER HOLDERS SAECO
SIEBTRÄGER SAECO
PORTAFILTROS SAECO

1 2 3 4 5 6

Photo	LF Code	Wings	Knob	Spouts	Filter	Spring	Suitable for	For machine model
1	**1165109**	7 mm	M10	3/8	NO	NO	SAECO WGA8001059000	AROMA
2	**1165108**	7 mm	M10	3/8	NO	NO	SAECO WGA8001060000	AROMA
3	**1165026**	7 mm	M10	3/8	NO	NO	SAECO WGA26G0104	AROMA
4	**1165043**	---	---	---	YES	---	SAECO 11008490	AROMA - GRANCREMA - MAGICCAPPUCCINO
5	**1165044**	---	---	---	YES	---	SAECO 226551850	AROMA - MAGIC
6	**1165210**	---	---	---	YES	YES	SAECO 11026924	POEMIA

PORTAFILTRI SAN MARCO
FILTER HOLDERS SAN MARCO
SIEBTRÄGER SAN MARCO
PORTAFILTROS SAN MARCO

1

2

3

4

Photo	LF Code	Wings	Knob	Spouts	Filter	Spring	Suitable for	For machine model
1	**1165080**	7.4 mm	M10	3/8	NO	NO	SAN MARCO 400154	105 - 100 - 95 - 85 - LEVA
2	**1165021**	7.4 mm	M10	3/8	NO	NO	SAN MARCO 400154	105 - 100 - 95 - 85 - LEVA
3	**1165051**	7.4 mm	M10	3/8	NO	NO	SAN MARCO 502034	105 - 100 - 95 - 85 - LEVA
4	**1160024**	7.4 mm	M10	3/8	NO	NO	SAN MARCO 502750	100 - 105 - 105 NEW

PORTAFILTRI SANREMO
FILTER HOLDERS SANREMO
SIEBTRÄGER SANREMO
PORTAFILTROS SANREMO

1

2

Photo	LF Code	Wings	Knob	Spouts	Filter	Spring	Suitable for	For machine model
1	**1165061**	6.3 mm	M12	3/8	NO	NO	SANREMO 10052030	AMALFI - CAPRI - MILANO LX - VENEZIA
2	**1165134**	6.3 mm	M12	3/8	NO	NO	SANREMO 14052034	TORINO - VERONA - ZOE

PORTAFILTRI SCALA
FILTER HOLDERS SCALA
SIEBTRÄGER SCALA
PORTAFILTROS SCALA

1

2

3

4

Photo	LF Code	Wings	Knob	Spouts	Filter	Spring	Suitable for	For machine model
1	**1165022**	7 mm	M12	3/8	NO	NO	SCALA C-0503	BUTTERFLY - CARMEN
2	**5038881**	6.3 mm	M12	3/8	NO	YES	SCALA C-0531A	---
3	**5038882**	6.3 mm	M12	3/8	NO	YES	SCALA C-0532A	---
4	**1165134**	6.3 mm	M12	3/8	NO	NO	SCALA	---

PORTAFILTRI SPAZIALE
FILTER HOLDERS SPAZIALE
SIEBTRÄGER SPAZIALE
PORTAFILTROS SPAZIALE

1

2

3

4

Photo	LF Code	Wings	Knob	Spouts	Filter	Spring	Suitable for	For machine model
1	**1165090**	6 mm	M12x1.5	3/8	7 gr	YES	SPAZIALE 02891	ALL MODELS - TUTTI I MODELLI
2	**1165091**	6 mm	M12x1.5	3/8	14 gr	YES	SPAZIALE 02891	ALL MODELS - TUTTI I MODELLI
3	**1165057**	6 mm	M12x1.5	3/8	NO	NO	SPAZIALE 02891	ALL MODELS - TUTTI I MODELLI
4	**1165056**	6 mm	M12	3/8	NO	NO	SPAZIALE	ALL MODELS - TUTTI I MODELLI

PORTAFILTRI UNIC
FILTER HOLDERS UNIC
SIEBTRÄGER UNIC
PORTAFILTROS UNIC

1

Photo	LF Code	Wings	Knob	Spouts	Filter	Spring	Suitable for	For machine model
1	**5054501**	6.8 mm	M12	3/8	YES	YES	UNIC 33131	---

PORTAFILTRI VFA
FILTER HOLDERS VFA
SIEBTRÄGER VFA
PORTAFILTROS VFA

1

Photo	LF Code	Wings	Knob	Spouts	Filter	Spring	Suitable for	For machine model
1	**1165022**	7 mm	M12	3/8	NO	NO	VFA	---

PORTAFILTRI VIBIEMME
FILTER HOLDERS VIBIEMME
SIEBTRÄGER VIBIEMME
PORTAFILTROS VIBIEMME

1 2 3 4 5

Photo	LF Code	Wings	Knob	Spouts	Filter	Spring	Suitable for	For machine model
1	**1165124**	5.5 mm	M10	3/8	6 gr	YES	VIBIEMME ASPORTN1TBMON	ALL MODELS - TUTTI I MODELLI
2	**1165125**	5.5 mm	M10	3/8	12 gr	YES	VIBIEMME ASPORTN2TBMON	ALL MODELS - TUTTI I MODELLI
3	**1165126**	5.5 mm	M10	3/8	7 gr	YES	VIBIEMME ASPORTN1TAMON	ALL MODELS - TUTTI I MODELLI
4	**1165127**	5.5 mm	M10	3/8	14 gr	YES	VIBIEMME ASPORTN2TAMON	ALL MODELS - TUTTI I MODELLI
5	**1165063**	5.5 mm	M10	3/8	NO	NO	VIBIEMME PORTTN	ALL MODELS - TUTTI I MODELLI

PORTAFILTRI VIBIEMME
FILTER HOLDERS VIBIEMME
SIEBTRÄGER VIBIEMME
PORTAFILTROS VIBIEMME

1 2

Photo	LF Code	Wings	Knob	Spouts	Filter	Spring	Suitable for	For machine model
1	**1165232**	5.5 mm	M12	3/8	YES	YES	VIBIEMME ASPORT1TLEVAM	REPLICA AL
2	**1165233**	5.5 mm	M12	3/8	YES	YES	VIBIEMME ASPORT2TLEVAM	REPLICA AL

PORTAFILTRI VICTORIA ARDUINO
FILTER HOLDERS VICTORIA ARDUINO
SIEBTRÄGER VICTORIA ARDUINO
PORTAFILTROS VICTORIA ARDUINO

1 2 3 4 5 6

Photo	LF Code	Wings	Knob	Spouts	Filter	Spring	Suitable for	For machine model
1	**1165045**	7 mm	M10	3/8	6 gr	YES	VICTORIA ARDUINO 98005024	VENUS FAMILY
2	**1165055**	7 mm	M10	3/8	12 gr	YES	VICTORIA ARDUINO 98005024	VENUS FAMILY
3	**1165094**	7 mm	M10	3/8	7 gr	YES	VICTORIA ARDUINO 98050023	ADONIS
4	**1165095**	7 mm	M10	3/8	14 gr	YES	VICTORIA ARDUINO 98050024	ADONIS
5	**1165237**	7 mm	M10	3/8	NO	NO	VICTORIA ARDUINO 98005024.PN	VA388 BLACK EAGLE
6	**1165012**	7 mm	M10	3/8	NO	NO	VICTORIA ARDUINO 06200092	ADONIS

PORTAFILTRI VICTORIA ARDUINO
FILTER HOLDERS VICTORIA ARDUINO
SIEBTRÄGER VICTORIA ARDUINO
PORTAFILTROS VICTORIA ARDUINO

1

2

3

Photo	LF Code	Wings	Knob	Spouts	Filter	Spring	Suitable for	For machine model
1	**1165089**	6.2 mm	M12	3/8	NO	NO	VICTORIA ARDUINO 17000037	ATHENALEVA
2	**1165093**	5 mm	M12	3/8	NO	NO	VICTORIA ARDUINO 49800002	VENUSBAR
3	**1165012**	7 mm	M10	3/8	NO	NO	VICTORIA ARDUINO 98005001	ATHENA S

PORTAFILTRI VISACREM
FILTER HOLDERS VISACREM
SIEBTRÄGER VISACREM
PORTAFILTROS VISACREM

1

2

3

4

5

Photo	LF Code	Wings	Knob	Spouts	Filter	Spring	Suitable for	For machine model
1	**1165022**	7 mm	M12	3/8	NO	NO	VISACREM 11252202	ALL MODELS - TUTTI I MODELLI
2	**1165036**	6.5 mm	M8	3/8	NO	NO	VISACREM 08103510	ALL MODELS - TUTTI I MODELLI
3	**5057230**	6.5 mm	M12	3/8	NO	YES	VISACREM 08485800	NEW MODELS - NUOVI MODELLI
4	**5034110**	6.5 mm	M12	3/8	NO	YES	VISACREM 08485900	NEW MODELS - NUOVI MODELLI
5	**5055624**	6.5 mm	M12	3/8	NO	NO	VISACREM 08480050	NEW MODELS - NUOVI MODELLI

PORTAFILTRI WEGA
FILTER HOLDERS WEGA
SIEBTRÄGER WEGA
PORTAFILTROS WEGA

1 - ORIGINAL

2 - SUITABLE

3 - ORIGINAL

4 - SUITABLE

5

Photo	LF Code	Wings	Knob	Spouts	Filter	Spring	Suitable for	For machine model
1	**1165076**	7 mm	M12	3/8	NO	NO	WEGA WY27311056	CONCEPT52
2	**1165116**	7 mm	M12	3/8	NO	NO	WEGA	CONCEPT52
3	**1165079**	7 mm	M12	3/8	NO	NO	WEGA WY27311057	CONCEPT52
4	**1165115**	7 mm	M12	3/8	NO	NO	WEGA	CONCEPT52
5	**1165114**	7 mm	M12	3/8	NO	NO	WEGA	CONCEPT52

PORTAFILTRI WEGA
FILTER HOLDERS WEGA
SIEBTRÄGER WEGA
PORTAFILTROS WEGA

1

2

3

4

5

6

Photo	LF Code	Wings	Knob	Spouts	Filter	Spring	Suitable for	For machine model
1	**1165082**	6.5 mm	M12	3/8	7 gr	YES	WEGA	ALL MODELS - TUTTI I MODELLI
2	**1165083**	6.5 mm	M12	3/8	14 gr	YES	WEGA	ALL MODELS - TUTTI I MODELLI
3	**1165081**	6.5 mm	M12	3/8	NO	NO	WEGA WY27311010	ALL MODELS - TUTTI I MODELLI
4	**2106200**	6.5 mm	M12	3/8	NO	NO	WEGA WY27311010	ALL MODELS - TUTTI I MODELLI
5	**1165061**	6.3 mm	M12	3/8	NO	NO	WEGA W11775	ALL MODELS - TUTTI I MODELLI
6	**1165022**	7 mm	M12	3/8	NO	NO	WEGA W10328	OLD MODELS - MODELLI VECCHI

PORTAFILTRI WEGA
FILTER HOLDERS WEGA
SIEBTRÄGER WEGA
PORTAFILTROS WEGA

1

2

3

4

5

6

Photo	LF Code	Wings	Knob	Spouts	Filter	Spring	Suitable for	For machine model
1	**1165227**	6 mm	M12	3/8	NO	NO	WEGA WY83270040R	CONCEPT58
2	**1165228**	6 mm	M12	3/8	NO	NO	WEGA WY83270041R	CONCEPT58
3	**2106160**	6 mm	M12	3/8	NO	NO	WEGA	CONCEPT58
4	**1165225**	7 mm	M12	3/8	NO	NO	WEGA WY83270042R	CONCEPT52
5	**1165226**	7 mm	M12	3/8	NO	NO	WEGA WY83270043R	CONCEPT52
6	**1165114**	7 mm	M12	3/8	NO	NO	WEGA	CONCEPT52

PORTAFILTRI ZACCONI
FILTER HOLDERS ZACCONI
SIEBTRÄGER ZACCONI
PORTAFILTROS ZACCONI

1

Photo	LF Code	Wings	Knob	Spouts	Filter	Spring	Suitable for	For machine model
1	**1165208**	6 mm	---	---	NO	NO	ZACCONI 61	ESPRESSO BABY - RIVIERA

PORTAFILTRI SENZA FONDO
BOTTOMLESS FILTER HOLDERS
BODENLOSER SIEBTRÄGER
SOPORTES FILTROS SIN FONDO

LF Code	Suitable for	Wings	Adapter filter for pods	Notes
1165034	ASTORIA/CMA	6.0 mm	No	---
1165117	ASTORIA/CMA	6.5 mm	No	Plus 4 you
1165181	BEZZERA	5.8 mm	Yes	---
1165216	BFC	6.2 mm	No	---
1165189	BIANCHI	6.4 mm	Yes	---
1165035	BRASILIA	5.5 mm	Yes	---
1165183	BRUGNETTI	7.2 mm	Yes	---
1165038	CARIMALI	6.0 mm	No	---
1165183	CASADIO	7.2 mm	Yes	---
1165182	CIMBALI	5.5 mm	Yes	---
1165039	CONTI	8.0 mm	No	---
1165119	DALLA CORTE	9.0 mm	No	---
1165183	ECM	7.2 mm	Yes	---
1165193	ECM MANUFACTURE	6.4 mm	Yes	---
1165189	ELEKTRA	6.4 mm	Yes	---
1165192	EXPOBAR	6.2 mm	Yes	---
1165183	FAEMA	7.2 mm	Yes	---
1165189	FIAMMA RST	6.4 mm	Yes	---
1165195	FIORENZATO CS	6.4 mm	Yes	---
1165184	FUTURMAT	7.2 mm	No	---
1165185	GAGGIA	6.6 mm	Yes	---
1165184	GAGGIA SPAGNA	7.2 mm	No	---
1165194	GRIMAC	7.0 mm	Yes	---
1165191	GRUPPO IZZO	7.0 mm	Yes	---
1165189	ISOMAC	6.4 mm	Yes	---
1165184	ITALCREM	7.2 mm	No	---
1165195	MAGISTER	6.4 mm	Yes	---
1165184	MAIRALI	7.2 mm	No	---
1165186	MARZOCCO	6.6 mm	Yes	---
1165189	MCE	6.4 mm	Yes	---
1165118	NUOVA SIMONELLI	7.0 mm	No	Slanted body / Corpo inclinato
1165189	ORCHESTRALE	6.4 mm	Yes	---
5030988	PAVONI	5.6 mm	Yes	---
1165187	PROMAC	6.2 mm	Yes	---
1165189	QUICK MILL	6.4 mm	Yes	---
1165187	RANCILIO	6.2 mm	Yes	---
1165216	ROYAL	6.2 mm	No	---
1165185	SAECO	6.6 mm	No	---
1165191	SAN MARCO	7.0 mm	Yes	---
1165193	SANREMO	6.4 mm	Yes	---
1165189	SCALA	6.4 mm	Yes	---
5050620	SPAZIALE	6.0 mm	Yes	---
1165329	SYNESSO	5.9 mm	No	---
1165188	VIBIEMME	6.2 mm	Yes	---
1165118	VICTORIA ARDUINO	7.0 mm	No	Slanted body / Corpo inclinato
1165184	VISACREM	7.2 mm	No	---
1165189	WEGA	6.4 mm	Yes	---
1165117	WEGA	6.5 mm	No	Concept

PORTAFILTRI SENZA FONDO SERIE LEGNO
BOTTOMLESS FILTER HOLDERS SERIES WOOD
BODENLOS SIEBTRÄGER SERIE HOLZ
PORTAFILTRO SIN FONDO SERIE MADERA

LF Code	Suitable for	Wings	Adapter filter for pods	Notes
1165219	ASTORIA	6.0 mm	Yes	---
1165219	BEZZERA	6.0 mm	Yes	---
5086956	BFC	6.2 mm	Yes	---
1165222	BIANCHI	6.4 mm	Yes	---
5085669	BRASILIA	7.2 mm	Yes	---
5085669	BRUGNETTI	7.2 mm	Yes	---
5085669	CASADIO	7.2 mm	Yes	---
1165220	CIMBALI	5.5 mm	Yes	---
5085669	ECM	7.2 mm	Yes	---
5086956	ECM MANUFACTURE	6.2 mm	Yes	---
1165222	ELEKTRA	6.4 mm	Yes	---
5086956	EXPOBAR	6.2 mm	Yes	---
5085669	FAEMA	7.2 mm	Yes	---
1165222	FIAMMA RST	6.4 mm	Yes	---
1165222	FIORENZATO CS	6.4 mm	Yes	---
5085669	FUTURMAT	7.2 mm	Yes	---
1165221	GAGGIA	6.6 mm	Yes	---
5085669	GAGGIA SPAGNA	7.2 mm	Yes	---
5085669	GRIMAC	7.2 mm	Yes	---
1165223	GRUPPO IZZO	7.0 mm	Yes	---
1165222	ISOMAC	6.4 mm	Yes	---
5085669	ITALCREM	7.2 mm	Yes	---
1165222	MAGISTER	6.4 mm	Yes	---
5085669	MAIRALI	7.2 mm	Yes	---
5086954	MARZOCCO	6.6 mm	Yes	---
1165222	MCE	6.4 mm	Yes	---
1165218	NUOVA SIMONELLI	7.0 mm	NO	Slanted body / Corpo inclinato
1165222	ORCHESTRALE	6.4 mm	Yes	---
5086956	PROMAC	6.2 mm	Yes	---
1165222	QUICK MILL	6.4 mm	Yes	---
5086956	RANCILIO	6.2 mm	Yes	---
5086956	ROYAL	6.2 mm	Yes	---
1165221	SAECO	6.6 mm	Yes	---
1165223	SAN MARCO	7.0 mm	Yes	---
5086956	SANREMO	6.2 mm	Yes	---
1165222	SCALA	6.4 mm	Yes	---
1165224	SPAZIALE	6.0 mm	Yes	---
5086956	VIBIEMME	6.2 mm	Yes	---
1165218	VICTORIA ARDUINO	7.0 mm	NO	Slanted body / Corpo inclinato
5085669	VISACREM	7.2 mm	Yes	---
1165222	WEGA	6.4 mm	Yes	---

PORTAFILTRI CON TERMOMANOMETRO
FILTER HOLDERS WITH THERMOMANOMETER
SIEBTRÄGER MIT THERMOMANOMETER
PORTAFILTRO CON TERMOMANÓMETRO

1

Photo	LF Code	Suitable for	Wings	Notes
1	**5073894**	ASTORIA/CMA PLUS4YOU	7.0 mm	0-120°C / 0-240°F - 0-16 bar / 0-200 psi
1	**5073895**	BEZZERA	5.5 mm	0-120°C / 0-240°F - 0-16 bar / 0-200 psi
1	**1165500**	BFC	7.2 mm	0-120°C / 0-240°F - 0-16 bar / 0-200 psi
1	**1165500**	BRASILIA	7.2 mm	0-120°C / 0-240°F - 0-16 bar / 0-200 psi
1	**5073893**	CIMBALI	6.2 mm	0-120°C / 0-240°F - 0-16 bar / 0-200 psi
1	**1165500**	CONTI	7.2 mm	0-120°C / 0-240°F - 0-16 bar / 0-200 psi
1	**1165500**	ELEKTRA	7.2 mm	0-120°C / 0-240°F - 0-16 bar / 0-200 psi
1	**1165500**	EXPOBAR	7.2 mm	0-120°C / 0-240°F - 0-16 bar / 0-200 psi
1	**1165500**	FAEMA	7.2 mm	0-120°C / 0-240°F - 0-16 bar / 0-200 psi
1	**1165500**	FUTURMAT/ARIETE	7.2 mm	0-120°C / 0-240°F - 0-16 bar / 0-200 psi
1	**5073891**	GRUPPO IZZO / MY WAY	7.4 mm	0-120°C / 0-240°F - 0-16 bar / 0-200 psi
1	**5073892**	MARZOCCO	6.6 mm	0-120°C / 0-240°F - 0-16 bar / 0-200 psi
1	**5070800**	NUOVA SIMONELLI	7.0 mm	0-120°C / 0-240°F - 0-16 bar / 0-200 psi
1	**1165500**	RANCILIO	7.2 mm	0-120°C / 0-240°F - 0-16 bar / 0-200 psi
1	**5073891**	SAN MARCO	7.4 mm	0-120°C / 0-240°F - 0-16 bar / 0-200 psi
1	**1165500**	SANREMO	7.2 mm	0-120°C / 0-240°F - 0-16 bar / 0-200 psi
1	**5067922**	SPAZIALE	6.0 mm	0-120°C / 0-240°F - 0-16 bar / 0-200 psi
1	**1165500**	VIBIEMME	7.2 mm	0-120°C / 0-240°F - 0-16 bar / 0-200 psi
1	**1165500**	WEGA	7.2 mm	0-120°C / 0-240°F - 0-16 bar / 0-200 psi
1	**5073894**	WEGA CONCEPT	7.0 mm	0-120°C / 0-240°F - 0-16 bar / 0-200 psi

PORTAFILTRI PER CIALDE CAFFE'/ORZO
FILTER-HOLDERS FOR COFFEE/BARLEY PODS
SIEBTRÄGER KAFFEE-/GERSTENKAFFEE-PADS
PORTAFILTROS DOSIS CAFÉ/CEBADA

LF Code	Suitable for	Wings
1165162	BEZZERA - BFC - BRASILIA - BRUGNETTI AURORA - CONTI	6.5 mm
1165162	EXPOBAR - FIORENZATO CS - GRIMAC - RANCILIO - ROYAL	6.5 mm
1165162	SANREMO - SCALA - VIBIEMME - WEGA	6.5 mm
1165163	CIMBALI	5.5 mm
1165032	FAEMA	6.3 mm
1165165	GRUPPO IZZO - MY WAY - SAN MARCO	7.4 mm
1165164	SPAZIALE	6.0 mm

PORTAFILTRI PER CIALDE ORZO
BARLEY PODS FILTER HOLDERS
SIEBTRÄGER FÜR GERSTENKAFFEE-PADS
PORTAFILTROS DOSIS DE CEBADA

LF Code	Suitable for	Wings
1165085	ASTORIA/CMA	5.4 mm
1165166	ASTORIA/CMA Plus4you	5.0 mm
1165202	BEZZERA	5.5 mm
1165151	CIMBALI	8.0 mm
1165167	DALLA CORTE	8.0 mm
1165152	FAEMA	6.4 mm
1165153	FUTURMAT	6.8 mm
1165158	GAGGIA	6.5 mm
1165159	GRUPPO IZZO / MY WAY	8.0 mm
1165154	NUOVA SIMONELLI	7.0 mm
1165155	RANCILIO	6.0 mm
1165159	SAN MARCO	8.0 mm
1165160	SPAZIALE	8.4 mm
1165156	VIBIEMME	6.0 mm
1165157	WEGA	6.5 mm

PORTAFILTRI PER CAPSULE LAVAZZA BLUE
FILTER HOLDERS FOR CAPSULES LAVAZZA BLUE
SIEBTRÄGER FÜR KAPSEL LAVAZZA BLUE
PORTAFILTROS PARA CAPSULAS LAVAZZA BLUE

1

2 - ø 53 mm

2

Photo	LF Code	Suitable for	Wings
1	**1165245**	ASTORIA CMA	6.0 mm
1	**1165249**	ASTORIA/CMA Plus4you	6.5 mm
1	**1165245**	BEZZERA	6.0 mm
1	**1165251**	BFC	6.2 mm
1	**1165241**	BIANCHI	6.4 mm
1	**1165244**	BRASILIA	5.5 mm
1	**5083605**	BRUGNETTI AURORA	7.2 mm
1	**5085454**	CARIMALI	6.0 mm
1	**5083605**	CASADIO	7.2 mm
1	**5083604**	CIMBALI	6.5 mm
1	**1165247**	DALLA CORTE	9.0 mm
1	**5083605**	ECM	7.2 mm
1	**1165241**	ELEKTRA	6.4 mm
1	**1165251**	EXPOBAR	6.2 mm
1	**5083605**	FAEMA	7.2 mm
1	**1165241**	FIAMMA RST	6.4 mm
1	**1165241**	FIORENZATO C.S.	6.4 mm
1	**5083605**	FUTURMAT	7.2 mm
1	**1165248**	GAGGIA	6.6 mm
1	**5083605**	GRIMAC	7.2 mm
1	**5088433**	GRUPPO IZZO / MY WAY	6.5 mm
1	**1165241**	ISOMAC	6.4 mm
1	**1165243**	MARZOCCO	6.6 mm
1	**1165241**	MCE	6.4 mm
1	**1165250**	NUOVA SIMONELLI	6.5 mm
1	**1165241**	ORCHESTRALE	6.4 mm
1	**1165242**	PAVONI	5.6 mm
1	**1165251**	PROMAC	6.2 mm
1	**1165241**	QUICK MILL	6.4 mm
1	**1165251**	RANCILIO	6.2 mm
1	**1165251**	ROYAL	6.2 mm
1	**1165248**	SAECO	6.6 mm
1	**5088433**	SAN MARCO	6.5 mm
1	**1165251**	SANREMO	6.2 mm
1	**1165241**	SCALA	6.4 mm
1	**1165246**	SPAZIALE	6.0 mm
1	**1165251**	VIBIEMME	6.2 mm
1	**1165250**	VICTORIA ARDUINO	6.5 mm
1	**1165241**	WEGA	6.4 mm
1	**1165249**	WEGA Concept	6.5 mm
2	**5083606**	---	---

IMPUGNATURE PRESSINI CONCEPT-ART SERIE CLASSIC
TAMPER HANDLES CONCEPT-ART SERIES CLASSIC
HANDGRIFFE TAMPER CONCEPT-ART SERIE CLASSIC
EMPUÑADURAS PRENSAS CONCEPT-ART SERIE CLASSIC

1

2

Photo	LF Code	Description
1	**1385748**	M8 BROWN WOOD - M8 LEGNO MARRONE
2	**1385749**	M8 BROWN WOOD - M8 LEGNO MARRONE

IMPUGNATURE PRESSINI CONCEPT-ART SERIE ELEGANCE
TAMPER HANDLES CONCEPT-ART SERIES ELEGANCE
HANDGRIFFE TAMPER CONCEPT-ART SERIE ELEGANCE
EMPUÑADURAS PRENSAS CONCEPT-ART SERIE ELEGANCE

1

2

3

4

Photo	LF Code	Description
1	**1385711**	M8 BLACK WOOD - M8 LEGNO NERO
2	**1385712**	M8 BEIGE WOOD - M8 LEGNO BEIGE
3	**1385713**	M8 BROWN WOOD - M8 LEGNO MARRONE
4	**1385714**	M8 BROWN WOOD - M8 LEGNO MARRONE

IMPUGNATURE PRESSINI CONCEPT-ART SERIE POP
TAMPER HANDLES CONCEPT-ART SERIES POP
HANDGRIFFE TAMPER CONCEPT-ART SERIE POP
EMPUÑADURAS PRENSAS CONCEPT-ART SERIE POP

1

2

3

4

5

Photo	LF Code	Description
1	**1385715**	M8 ALUMINIUM - M8 ALLUMINIO
2	**1385716**	M8 ALUMINIUM - M8 ALLUMINIO
3	**1385717**	M8 ALUMINIUM - M8 ALLUMINIO
4	**1385718**	M8 ALUMINIUM - M8 ALLUMINIO
5	**1385064**	M8 MARBLE - M8 MARMO

IMPUGNATURE PRESSINI CONCEPT-ART SERIE TECHNIC
TAMPER HANDLES CONCEPT-ART SERIES TECHNIC
HANDGRIFFE TAMPER CONCEPT-ART SERIE TECHNIC
EMPUÑADURAS PRENSAS CONCEPT-ART SERIE TECHNIC

1

2

3

4

Photo	LF Code	Description	Pressure (Kg)
1	**1385701**	M8 ALUMINIUM - M8 ALLUMINIO	8÷21
2	**1385702**	M8 ALUMINIUM - M8 ALLUMINIO	8÷21
3	**1385703**	M8 ALUMINIUM - M8 ALLUMINIO	8÷21
4	**1385704**	M8 ALUMINIUM - M8 ALLUMINIO	8÷21

BASI PRESSINI CONCEPT-ART PER IMPUGNATURE SERIE CLASSIC
TAMPER BASES CONCEPT-ART FOR HANDLES SERIES CLASSIC
TAMPERBASEN CONCEPT-ART FÜR HANDGRIFFE SERIE CLASSIC
BASES PRENSAS CONCEPT-ART PARA EMPUÑADURAS SERIE CLASSIC

1

2

3

Photo	LF Code	ø	Material	Pressing zone
1	**1385761**	58 mm	STAINLESS STEEL - INOX	FLAT - PIATTA
2	**1385756**	53 mm	STAINLESS STEEL - INOX	FLAT - PIATTA
3	**1385754**	58 mm	ALUMINIUM - ALLUMINIO	FLAT - PIATTA

Personalizzabili
Customizable
personalisierbar
Personalizables

BASI PRESSINI CONCEPT-ART PER IMPUGNATURE SERIE EXCLUSIVE - ELEGANCE - POP - TECHNIC
TAMPER BASES CONCEPT-ART FOR HANDLES SERIES EXCLUSIVE - ELEGANCE - POP - TECHNIC
TAMPERBASEN CONCEPT-ART FÜR HANDGRIFFE SERIE EXCLUSIVE - ELEGANCE - POP -TECHNIC
BASES PRENSAS CONCEPT-ART PARA EMPUÑADURAS SERIE EXCLUSIVE - ELEGANCE - POP - TECHNIC

1

2

Photo	LF Code	ø	Material	Pressing zone
1	**1385733**	58 mm	STAINLESS STEEL - INOX	CONVEX - CONVESSA
1	**1385732**	57 mm	STAINLESS STEEL - INOX	CONVEX - CONVESSA
1	**1385731**	53 mm	STAINLESS STEEL - INOX	CONVEX - CONVESSA
1	**1385730**	58 mm	STAINLESS STEEL - INOX	FLAT - PIATTA
1	**1385729**	57 mm	STAINLESS STEEL - INOX	FLAT - PIATTA
1	**1385726**	54 mm	STAINLESS STEEL - INOX	FLAT - PIATTA
1	**1385725**	53 mm	STAINLESS STEEL - INOX	FLAT - PIATTA
1	**1385724**	52 mm	STAINLESS STEEL - INOX	FLAT - PIATTA
1	**1385723**	51 mm	STAINLESS STEEL - INOX	FLAT - PIATTA
1	**1385722**	50 mm	STAINLESS STEEL - INOX	FLAT - PIATTA
1	**1385721**	49 mm	STAINLESS STEEL - INOX	FLAT - PIATTA
1	**1385720**	48 mm	STAINLESS STEEL - INOX	FLAT - PIATTA
1	**1385719**	41 mm	STAINLESS STEEL - INOX	FLAT - PIATTA
2	**1385745**	58 mm	STAINLESS STEEL - INOX	CONVEX - CONVESSA
2	**1385744**	57 mm	STAINLESS STEEL - INOX	CONVEX - CONVESSA
2	**1385740**	58 mm	STAINLESS STEEL - INOX	FLAT - PIATTA
2	**1385739**	57 mm	STAINLESS STEEL - INOX	FLAT - PIATTA

Personalizzabili
Customizable
personalisierbar
Personalizables

PRESSINI IN ALLUMINIO CONCEPT-ART
ALUMINIUM TAMPERS CONCEPT-ART
TAMPER AUS ALUMINIUM CONCEPT-ART
PRENSAS DE ALUMINIO CONCEPT-ART

1

Photo	LF Code	ø	Material	Pressing zone
1	**1385766**	58 mm	ALUMINIUM - ALLUMINIO	FLAT - PIATTA
1	**1385765**	57 mm	ALUMINIUM - ALLUMINIO	FLAT - PIATTA
1	**1385764**	53 mm	ALUMINIUM - ALLUMINIO	FLAT - PIATTA

Personalizzabili
Customizable
personalisierbar
Personalizables

ACCESSORI CONCEPT-ART PER PRESSINI E PORTAFILTRI
ACCESSORIES CONCEPT-ART FOR TAMPERS AND FILTER HOLDERS
ZUBEHÖRE CONCEPT-ART FÜR TAMPER UND SIEBTRÄGER
ACCESORIOS CONCEPT-ART PARA PRENSAS Y SOPORTE FILTROS

1

2

3

4

5

Photo	LF Code	Description
1	**1385774**	FILTER HOLDER - SUPPORTO PORTAFILTRO
2	**1385772**	FILTER HOLDER - SUPPORTO PORTAFILTRO
3	**1385770**	FILTER HOLDER - SUPPORTO PORTAFILTRO
4	**1385771**	FILTER HOLDER - SUPPORTO PORTAFILTRO
5	**1385065**	FILTER HOLDER MARBLE - SUPPORTO PORTAFILTRO MARMO

ACCESSORI CONCEPT-ART PER PRESSINI E PORTAFILTRI
ACCESSORIES CONCEPT-ART FOR TAMPERS AND FILTER HOLDERS
ZUBEHÖRE CONCEPT-ART FÜR TAMPER UND SIEBTRÄGER
ACCESORIOS CONCEPT-ART PARA PRENSAS Y SOPORTE FILTROS

1

2

Photo	LF Code	Description
1	**1385776**	WOODER TAMPER HOLDER - PORTAPRESSINO LEGNO
2	**1385778**	BLACK MAT - TAPPETINO APPOGGIO NERO

IMPUGNATURE PRESSINI IMS
TAMPER HANDLES IMS
HANDGRIFFE TAMPER IMS
EMPUÑADURAS PRENSAS IMS

1

2

3

4

Photo	LF Code	ø	Material
1	**1385803**	M10	ANTICORODAL
2	**1385804**	M10	ANTICORODAL
3	**1385805**	M10	ANTICORODAL
4	**1385806**	M10	ANTICORODAL

Personalizzabili
Customizable
personalisierbar
Personalizables

IMPUGNATURE PRESSINI IMS
TAMPER HANDLES IMS
HANDGRIFFE TAMPER IMS
EMPUÑADURAS PRENSAS IMS

1

2

3

4

Photo	LF Code	ø	Material
1	**1385801**	M10	WOOD - LEGNO
2	**1385802**	M10	WOOD - LEGNO
3	**1385807**	M10	WOOD - LEGNO
4	**1385808**	M10	WOOD - LEGNO

Personalizzabili
Customizable
personalisierbar
Personalizables

BASI PRESSINI IMS
TAMPER BASES IMS
TAMPERBASEN IMS
BASES PRENSAS IMS

1

2

Photo	LF Code	ø	Material	Pressing zone
1	**1385810**	53 mm	S/STEEL	FLAT - PIATTA
1	**1385811**	54,4 mm	S/STEEL	FLAT - PIATTA
1	**1385812**	57,4 mm	S/STEEL	FLAT - PIATTA
1	**1385813**	58,4 mm	S/STEEL	FLAT - PIATTA
2	**1385815**	53 mm	ANTICORODAL	FLAT - PIATTA
2	**1385814**	58 mm	ANTICORODAL	FLAT - PIATTA

Personalizzabili
Customizable
personalisierbar
Personalizables

Pressini
Tampers for coffee
Tamper
Prensas café

PRESSINI ASSO COFFEE
TAMPERS ASSO COFFEE
TAMPER ASSO COFFEE
PRENSAS ASSO COFFEE

1 - ESSENTIAL

2 - ESSENTIAL

3 - ESSENTIAL

4 - ESSENTIAL

Photo	LF Code	ø	Material	Pressing zone
1	**1385066**	58 mm	WOOD & STAINLESS S. - LEGNO E INOX	FLAT - PIATTA
2	**1385067**	57 mm	WOOD & STAINLESS S. - LEGNO E INOX	FLAT - PIATTA
3	**1385068**	53 mm	WOOD & STAINLESS S. - LEGNO E INOX	FLAT - PIATTA
4	**1385069**	48 mm	WOOD & STAINLESS S. - LEGNO E INOX	FLAT - PIATTA

Personalizzabili
Customizable
personalisierbar
Personalizables

PRESSINI ASSO COFFEE
TAMPERS ASSO COFFEE
TAMPER ASSO COFFEE
PRENSAS ASSO COFFEE

1 - ESSENTIAL

2 - ESSENTIAL

3 - ESSENTIAL

4 - ESSENTIAL

Photo	LF Code	ø	Material	Pressing zone
1	**1385150**	58 mm	ALUMINIUM STAINLESS S. - ALLUMINIO E INOX	FLAT - PIATTA
1	**1385154**	57 mm	ALUMINIUM STAINLESS S. - ALLUMINIO E INOX	FLAT - PIATTA
2	**1385151**	58 mm	ALUMINIUM STAINLESS S. - ALLUMINIO E INOX	FLAT - PIATTA
2	**1385155**	57 mm	ALUMINIUM STAINLESS S. - ALLUMINIO E INOX	FLAT - PIATTA
3	**1385152**	58 mm	ALUMINIUM STAINLESS S. - ALLUMINIO E INOX	FLAT - PIATTA
3	**1385156**	57 mm	ALUMINIUM STAINLESS S. - ALLUMINIO E INOX	FLAT - PIATTA
4	**1385153**	58 mm	ALUMINIUM STAINLESS S. - ALLUMINIO E INOX	FLAT - PIATTA
4	**1385157**	57 mm	ALUMINIUM STAINLESS S. - ALLUMINIO E INOX	FLAT - PIATTA

Personalizzabili
Customizable
personalisierbar
Personalizables

PRESSINI ASSO COFFEE
TAMPERS ASSO COFFEE
TAMPER ASSO COFFEE
PRENSAS ASSO COFFEE

1 - EXTRA-GRIP

2 - EXTRA-GRIP

3 - EXTRA-GRIP

Photo	LF Code	ø	Material	Pressing zone
1	**1385158**	58 mm	ALUMINIUM STAINLESS S. - ALLUMINIO E INOX	FLAT - PIATTA
1	**1385160**	57 mm	ALUMINIUM STAINLESS S. - ALLUMINIO E INOX	FLAT - PIATTA
2	**1385159**	58 mm	ALUMINIUM STAINLESS S. - ALLUMINIO E INOX	FLAT - PIATTA
2	**1385161**	57 mm	ALUMINIUM STAINLESS S. - ALLUMINIO E INOX	FLAT - PIATTA
3	**1385162**	58 mm	ALUMINIUM STAINLESS S. - ALLUMINIO E INOX	FLAT - PIATTA
3	**1385163**	57 mm	ALUMINIUM STAINLESS S. - ALLUMINIO E INOX	FLAT - PIATTA

Personalizzabili
Customizable
personalisierbar
Personalizables

PRESSINI ASSO COFFEE
TAMPERS ASSO COFFEE
TAMPER ASSO COFFEE
PRENSAS ASSO COFFEE

1 - ELEGANCE

2 - MEXICAN SKUL

3 - COLOR WAVES

Photo	LF Code	ø	Material	Pressing zone
1	**1385190**	58 mm	ALUMINIUM STAINLESS S. - ALLUMINIO E INOX	FLAT - PIATTA
1	**1385191**	57 mm	ALUMINIUM STAINLESS S. - ALLUMINIO E INOX	FLAT - PIATTA
2	**1385192**	58 mm	ALUMINIUM STAINLESS S. - ALLUMINIO E INOX	FLAT - PIATTA
2	**1385193**	57 mm	ALUMINIUM STAINLESS S. - ALLUMINIO E INOX	FLAT - PIATTA
3	**1385194**	58 mm	ALUMINIUM STAINLESS S. - ALLUMINIO E INOX	FLAT - PIATTA
3	**1385195**	57 mm	ALUMINIUM STAINLESS S. - ALLUMINIO E INOX	FLAT - PIATTA

Personalizzabili
Customizable
personalisierbar
Personalizables

PRESSINI ASSO COFFEE
TAMPERS ASSO COFFEE
TAMPER ASSO COFFEE
PRENSAS ASSO COFFEE

1 - ZEBRANO

2 - PALISSANDRO

3 - ULIVO

Photo	LF Code	ø	Material	Pressing zone
1	**1385180**	58 mm	WOOD STAINLESS S. - LEGNO E INOX	FLAT - PIATTA
1	**1385182**	57 mm	WOOD STAINLESS S. - LEGNO E INOX	FLAT - PIATTA
2	**1385181**	58 mm	WOOD STAINLESS S. - LEGNO E INOX	FLAT - PIATTA
2	**1385183**	57 mm	WOOD STAINLESS S. - LEGNO E INOX	FLAT - PIATTA
3	**1385184**	58 mm	WOOD STAINLESS S. - LEGNO E INOX	FLAT - PIATTA
3	**1385185**	57 mm	WOOD STAINLESS S. - LEGNO E INOX	FLAT - PIATTA

Personalizzabili
Customizable
personalisierbar
Personalizables

PRESSINI ASSO COFFEE
TAMPERS ASSO COFFEE
TAMPER ASSO COFFEE
PRENSAS ASSO COFFEE

1 - THE KING ALLUMINIO

2 - THE KING ELEGANCE

3 - THE KING COLOR WAVES

4 - THE KING SOFT TOUCH

Photo	LF Code	ø	Material	Pressing zone
1	**1385071**	58,5 mm	ALLUMINIO - ALUMINUM	FLAT - PIATTA
2	**1385073**	58,5 mm	ALLUMINIO - ALUMINUM	FLAT - PIATTA
3	**1385074**	58,5 mm	ALLUMINIO - ALUMINUM	FLAT - PIATTA
4	**1385072**	58,5 mm	ALLUMINIO - ALUMINUM	FLAT - PIATTA

Personalizzabili
Customizable
personalisierbar
Personalizables

Dotato di regolazione di profondità, per garantire una pressatura livellata e uniforme. Riduce al minimo le possibilità di errore e le variazioni di pressatura tra baristi diversi. Forma ergonomica per ridurre tensione e rischio di lesione da sovrautilizzo.

Equipped with depth adjustment, to ensure a smooth and uniform pressing. Minimises the possibility of error occurring and variations in pressure for different baristas. Ergonomic shape which reduces tension and risk of overuse.

Ausgerüstet m/Tiefeneinstellung,um einen gleichm. und nivellierten Druck zu gewährleisten. Minimiert Fehlernmöglichkeit u/Drückvariation zwischen verschiedener Baristas. Ergonom. Form, um die Spannung u/Verletzungsgefahr durch Überbenutzung zu reduzieren.

Dotado de regulación de profundidad, para garantizar un prensado nivelado y uniforme. Reduce al mínimo la posibilidad de error y la variación de prensado entre diferentes baristas. Forma ergonómica p. reducir la tensión y el riesgo de lesión por sobreutilización.

PRESSINI LEGNO E INOX MOTTA
WOOD AND STAINLESS STEEL TAMPERS MOTTA
TAMPER HOLZ UND EDELSTAHL MOTTA
PRENSAS MADERA E INOX MOTTA

1

2

3

4

5

Photo	LF Code	ø	Material	Pressing zone
1	**1385026**	58 mm	WOOD AND S/STEEL - LEGNO E INOX	CONVEX - CONVESSA
1	**1385060**	58 mm	WOOD AND S/STEEL - LEGNO E INOX	FLAT - PIATTA
1	**1385031**	57 mm	WOOD AND S/STEEL - LEGNO E INOX	FLAT - PIATTA
1	**1385061**	53 mm	WOOD AND S/STEEL - LEGNO E INOX	FLAT - PIATTA
1	**1385062**	48 mm	WOOD AND S/STEEL - LEGNO E INOX	FLAT - PIATTA
2	**1385029**	58 mm	WOOD AND S/STEEL - LEGNO E INOX	CONVEX - CONVESSA
2	**1385027**	58 mm	WOOD AND S/STEEL - LEGNO E INOX	FLAT - PIATTA
2	**1385033**	57 mm	WOOD AND S/STEEL - LEGNO E INOX	FLAT - PIATTA
2	**1385035**	53 mm	WOOD AND S/STEEL - LEGNO E INOX	FLAT - PIATTA
3	**1385028**	58 mm	WOOD AND S/STEEL - LEGNO E INOX	CONVEX - CONVESSA
3	**1385043**	58 mm	WOOD AND S/STEEL - LEGNO E INOX	FLAT - PIATTA
3	**1385032**	57 mm	WOOD AND S/STEEL - LEGNO E INOX	FLAT - PIATTA
3	**1385034**	53 mm	WOOD AND S/STEEL - LEGNO E INOX	FLAT - PIATTA
4	**1385036**	58 mm	WOOD AND S/STEEL - LEGNO E INOX	CONVEX - CONVESSA
4	**1385037**	58 mm	WOOD AND S/STEEL - LEGNO E INOX	FLAT - PIATTA
4	**1385038**	57 mm	WOOD AND S/STEEL - LEGNO E INOX	FLAT - PIATTA
4	**1385039**	53 mm	WOOD AND S/STEEL - LEGNO E INOX	FLAT - PIATTA
5	**1385076**	58 mm	WOOD AND S/STEEL - LEGNO E INOX	FLAT - PIATTA

Personalizzabili
Customizable
personalisierbar
Personalizables

PRESSINI IN ALLUMINIO MOTTA
ALUMINIUM TAMPERS MOTTA
TAMPER AUS ALUMINIUM MOTTA
PRENSAS DE ALUMINIO MOTTA

1

2

3

4

5

Photo	LF Code	ø	Material	Pressing zone
1	**1385042**	58 mm	ALUMINIUM - ALLUMINIO	FLAT - PIATTA
1	**1385041**	57 mm	ALUMINIUM - ALLUMINIO	FLAT - PIATTA
1	**1385040**	53 mm	ALUMINIUM - ALLUMINIO	FLAT - PIATTA
2	**1385053**	58 mm	ALUMINIUM - ALLUMINIO	FLAT - PIATTA
2	**1385054**	53 mm	ALUMINIUM - ALLUMINIO	FLAT - PIATTA
3	**1385055**	58 mm	ALUMINIUM - ALLUMINIO	CONVEX - CONVESSA
3	**1385056**	58 mm	ALUMINIUM - ALLUMINIO	FLAT - PIATTA
3	**1385057**	57 mm	ALUMINIUM - ALLUMINIO	FLAT - PIATTA
3	**1385058**	53 mm	ALUMINIUM - ALLUMINIO	FLAT - PIATTA
4	**1385075**	58 mm	ALUMINIUM - ALLUMINIO	FLAT - PIATTA
4	**1385005**	57 mm	ALUMINIUM - ALLUMINIO	FLAT - PIATTA
4	**1385004**	53 mm	ALUMINIUM - ALLUMINIO	FLAT - PIATTA
5	**1385052**	53-58 mm	ALUMINIUM - ALLUMINIO	CONVEX - CONVESSA

Personalizzabili
Customizable
personalisierbar
Personalizables

PIANACAFFE MOTTA
COFFEE LEVELERS MOTTA
HOCHPRÄZISIONS-LEVELLER TAMPER MOTTA
NIVELADORES CAFÉ MOTTA

1

1

Photo	LF Code	ø	Material	Pressing zone
1	**1385070**	58 mm	S/STEEL - INOX	3 FLAT BLADES - 3 LAME PIATTE

Personalizzabili
Customizable
personalisierbar
Personalizables

Dotato di tre lame piatte in grado di distribuire efficacemente e uniformemente il caffè nel filtro, creando una cialda di spessore uguale. Elimina le problematiche legate alla distribuzione diseguale del caffè. Crea una superficie perfettamente piana per una pressatura corretta su cialda di uguale spessore. Riduce il rischio di channelling/micro-channelling.

Es verfügt über drei flache Messer, die den Kaffee im Filter effizient und gleichmäßig verteilen, um einen ebenmäßigen Pad zu erzeugen. Es beseitigt so das Problem der ungleichen Verteilung des Kaffees. Die Oberfläche ist perfekt eben um den richtigen Druck auf Pads mit gleicher Dicke auszuüben. Reduziert Channelling u/Micro-Channelling Risiko.

With 3 flat blades which distributes coffee into the filter in an effect. and uniform way. Therefore it creates a pod of equal thickness. Eliminating issues related to uneven coffee distribution. Creates a perfectly flat surface for a correct pressure on pods of equal thickness. Reduces the risk of channeling and micro-channelling.

Dotado de 3 laminas planas que permiten distribuir eficaz y uniformemente el café en el filtro, creando una cápsula con el mismo espesor. Elimina todo tipo de problemas relacionados con la distribución desigual del café. Crea una superficie perfect.plana para un prensado correcto creando una cápsula de igual espesor. Reduce riesgo de channelling y micro-channelling..

ACCESSORI MOTTA PER PRESSINI E PORTAFILTRI
ACCESSORIES MOTTA FOR TAMPERS AND FILTER HOLDERS
ZUBEHÖR MOTTA FÜR TAMPER UND SIEBTRÄGER
ACCESORIOS MOTTA PARA PRENSAS Y SOPORTE FILTROS

1

2

3

4

Photo	LF Code	Description
1	**1385047**	WOODER TAMPER HOLDER - PORTAPRESSINO LEGNO
2	**1385023**	S/STEEL TAMPER HOLDER - PORTAPRESSINO INOX
3	**1385024**	FILTER OLDER - SUPPORTO PORTAFILTRO
4	**1385025**	FILTER OLDER - SUPPORTO PORTAFILTRO

PRESSINI DINAMOMETRICI
DYNAMOMETRIC TAMPERS
DYNAMOMETRISCHE TAMPER
PRENSAS DINAMOMÉTRICAS

1

2

3

4 - TWIST

Photo	LF Code	ø	Material	Pressing zone	Pressure (Kg)
1	**1385600**	57 mm	ALUMINIUM - ALLUMINIO	FLAT - PIATTA	14
1	**1385601**	52 mm	ALUMINIUM - ALLUMINIO	FLAT - PIATTA	14
2	**1385602**	57 mm	PLASTIC - PLASTICA	FLAT - PIATTA	---
3	**1385605**	52-57 mm	ALUMINIUM - ALLUMINIO	FLAT - PIATTA	25
4	**1385606**	57 mm	ALUMINIUM - ALLUMINIO	FLAT - PIATTA	25

Personalizzabili
Customizable
personalisierbar
Personalizables

La pressatura del caffè espresso è una delle vere chiavi della sua qualità.
Il pressino dinamometrico è lo strumento che permette di pressare il caffè sempre con la giusta forza.

The correct press of coffee is a key quality factor.
The dynamometric tamper enables you to press coffee exactly anytime.

Der richtige Anpressdruck ist ein Schlüsselfaktor für guten Kaffee.
Der dynamometrische Kaffeepresser übt immer den exakt gleichen Druck aus.

El prensador del café espresso es una de las verdaderas claves de su calidad.
El prensador dinamométrico es el instrumento que permite prensar el café siempre con la justa fuerza.

PRESSINI PERFORATORI CAPSULE
PUNCHING TAMPERS CAPSULES
KAPSELBOHRER
PRENSAS PERFORADORAS CÁPSULAS

1

1

Photo	LF Code	ø	Material	Pressing zone
1	**5083606**	53 mm	ALUMINIUM - ALLUMINIO	FLAT - PIATTA

Personalizzabili
Customizable
personalisierbar
Personalizables

PRESSINI IN NYLON LF
NYLON TAMPERS LF
TAMPER AUS NYLON LF
PRENSAS DE NYLON LF

1

Photo	LF Code	ø	Material	Pressing zone
1	**1385002**	50-57 mm	NYLON	FLAT - PIATTA
1	**1385000**	50-52 mm	NYLON	FLAT - PIATTA

ACCESSORI LF PER PRESSINI E PORTAFILTRI
LF ACCESSORIES FOR TAMPERS AND FILTER HOLDERS
LF ZUBEHÖR FÜR TAMPER UND SIEBTRÄGER
ACCESORIOS LF PARA PRENSA-CAFÉ Y PORTAFILTROS

1

2

Photo	LF Code	Description
1	**1385350**	FILTER HOLDER - SUPPORTO PORTAFILTRO
2	**1385351**	FILTER HOLDER - SUPPORTO PORTAFILTRO

Personalizzabili
Customizable
personalisierbar
Personalizables

TAPPETINI APPOGGIO PRESSINO/PORTAFILTRO
FILTER HOLDER/TAMPER MATS
STÜTZTEPPICHE TAMPER/SIEBTRÄGER
TEJIDOS APOYO PRENSA/PORTAFILTRO

1 - 220x170 mm

2 - 200x150 mm

3 - 200x150 mm

4 - 200x150 mm

5 - 200x150 mm

Photo	LF Code	Description	Dimensions	Material
1	**1385775**	BLACK MAT - TAPPETINO APPOGGIO NERO	220x170 mm	SILICON RUBBER - GOMMA SILICONICA
2	**1385780**	PINK MAT - TAPPETINO APPOGGIO ROSA	200x150 mm	SILICON RUBBER - GOMMA SILICONICA
3	**1385781**	ORANGE MAT - TAPPETINO APPOGGIO ARANCIONE	200x150 mm	SILICON RUBBER - GOMMA SILICONICA
4	**1385782**	GREEN MAT - TAPPETINO APPOGGIO VERDE	200x150 mm	SILICON RUBBER - GOMMA SILICONICA
5	**1385783**	BLUE MAT - TAPPETINO APPOGGIO AZZURRO	200x150 mm	SILICON RUBBER - GOMMA SILICONICA

Personalizzabili
Customizable
personalisierbar
Personalizables

TAPPETINI APPOGGIO PRESSINO/PORTAFILTRO
FILTER HOLDER/TAMPER MATS
STÜTZTEPPICHE TAMPER/SIEBTRÄGER
TEJIDOS APOYO PRENSA/PORTAFILTRO

1 - 170x140x37 mm

2 - 238x160x48 mm

3 - 200x150x45 mm

Photo	LF Code	Description	Dimensions	Material
1	**1385779**	BLACK MAT - TAPPETINO APPOGGIO NERO	170x140x37 mm	SILICON RUBBER - GOMMA SILICONICA
2	**1385734**	BLACK MAT - TAPPETINO APPOGGIO NERO	238x160x48 mm	SILICON RUBBER - GOMMA SILICONICA
3	**1385778**	BLACK MAT - TAPPETINO APPOGGIO NERO	200x150x45 mm	SILICON RUBBER - GOMMA SILICONICA

Personalizzabili
Customizable
personalisierbar
Personalizables

PRESSOSTATI MA-TER
PRESSURE SWITCHES MA-TER
DRUCKSCHALTER MA-TER
PRESOSTATOS MA-TER

1

2

3

4

5

Photo	LF Code	Model	Scale (bar)	Suitable for	For machine model
1	**1320012**	XP110 - 16A 250V - 1/4"	0.5÷1.5 (1.0)	---	---
3	**1320546**	XP110 -15A 250V - 1/8"	0.5÷1.2	ASTORIA/CMA 20155	CK - CKE - CKX - CKXE
3	**1320022**	XP110 -15A 250V - 1/4"	1.0÷2.5	BEZZERA 7433009	BZ02 - BZ35 - BZ99
4	**1320536**	XP200A -16A 250V - 1/4"	0.5÷1.5	CARIMALI 96.00210	---
3	**1320026**	XP110 -15A 250V - 1/4"	0.5÷1.5	ECM C199900294	GIOTTO - VENEZIANO
3	**1320026**	XP110 -15A 250V - 1/4"	0.5÷1.5	ECM MANUFACTURE C199900294	ELEKTRONIKA II PROFI - MECHANIKA
3	**1320545**	XP110 - 15A 250V - 1/4"	0.5÷1.2	ELEKTRA 01344035	MICROCASA
3	**1320003**	XP110 - 21A 250V - 1/4"	0.5÷1.2	FIORENZATO CS A2100051	BRICOLETTA - DUCALE
5	**5064955**	XP700 - 16A 250V - 1/4"	0.5÷1.5	FIORENZATO CS A2100305	BRICOLETTA - COLOMBINA
3	**1320022**	XP110 -15A 250V - 1/4"	1.0÷2.5	GAGGIA 5008001000	GDCOMPACT - GECOMPACT - TS
2	**1320002**	XP71 ECHO - 16A 250V - 1/4"	0.5÷1.2	GAGGIA S451308	G105 - G106
3	**1320027**	XP110 - 15A 250V - 1/4"	1.0÷2.5	ISOMAC IS000109	MILLENNIUM - MONDIALE
3	**1320545**	XP110 - 15A 250V - 1/4"	0.5÷1.2	ISOMAC 451306	MILLENNIUM - MONDIALE - TEA
2	**1320002**	XP ECHO - 16A 250V - 1/4"	0.5÷1.2	PAVONI 451308	EUROPICCOLA - PROFESSIONAL - ROMANTICA
3	**1320545**	XP110 - 15A 250V - 1/4"	0.5÷1.2	PAVONI 451306	PUB
3	**1320023**	XP110 -21A 250V - 1/4"	0.5÷1.5	VIBIEMME ELETPREDSUKIR	DOMOBAR - DOMOBARSUPER
3	**1320546**	XP110 -15A 250V - 1/8"	0.5÷1.2	WEGA WY20155	ATLAS - COMBI NOVA - FORMULA MILANO - JUNIOR

PRESSOSTATI PARKER
PRESSURE SWITCHES PARKER
DRUCKSCHALTER PARKER
PRESOSTATOS PARKER

1

Photo	LF Code	Model	Scale (bar)
1	**1320541**	PS325-1C - 3 POLES - 20A - 1/4"	0.5÷1.4

PRESSOSTATI SIRAI
PRESSURE SWITCHES SIRAI
DRUCKSCHALTER SIRAI
PRESOSTATOS SIRAI

1

2

3

Photo	LF Code	Model	Scale (bar)
1	**1320531**	P302/6 - 3 POLES - 30A - 1/4"	0.5÷1.4
2	**1320533**	P302/6	---
3	**1320800**	P203T01 - 2 POLES - 20A - 1/4"	0.5÷1.4
3	**1320801**	P203T02 - 2 POLES - 20A - 1/4"	0.9÷1.7
3	**1320802**	P303T01 - 3 POLES - 20A - 1/4"	0.5÷1.4
3	**1320803**	P303T02 - 3 POLES - 20A - 1/4"	0.9÷1.7

PRESSOSTATI VARI
PRESSURE SWITCHES VARIOUS
DRUCKSCHALTER VERSCHIEDEN
PRESOSTATOS VARIOS

1

2

3

4

Photo	LF Code	Model	Scale (bar)	Suitable for	For machine model
1	**1320538**	CIMBALI/FAEMA	---	CIMBALI 537-030-700	M21 - M27 - M28 - M30 - M31 - M32 - M39
1	**1320538**	CIMBALI/FAEMA	---	FAEMA 537030700	E98 COMPACT
2	**1186078**	CIMBALI/FAEMA	---	CIMBALI 468-007-020	M21 - M27 - M28 - M30 - M31 - M32 - M39
2	**1186078**	CIMBALI/FAEMA	---	FAEMA 468007020	E98 COMPACT
3	**1320021**	CIMBALI/FAEMA	---	CIMBALI 916-549-010	M32 - M39 - M39GT
3	**1320021**	CIMBALI/FAEMA	---	FAEMA 916549010	EMBLEMA
4	**1320017**	CIMBALI/FAEMA	---	CIMBALI 537-046-900	M32 - M39 - M39GT
4	**1320017**	CIMBALI/FAEMA	---	FAEMA 537046900	EMBLEMA

PRESSOSTATI VARI
PRESSURE SWITCHES VARIOUS
DRUCKSCHALTER VERSCHIEDEN
PRESOSTATOS VARIOS

1

2

3

4

5

6

Photo	LF Code	Model	Scale (bar)	Suitable for	For machine model
1	**1320001**	16A 250V - 1/4"	1.4	NUOVA SIMONELLI 09200014	ELLI - MUSICA - MUSICAS - OSCAR
2	**1320007**	16A 250V - 1/4"	1.0	EXPOBAR 60000008	ELEN - G10 - MARKUS - MARKUS SILVER - MEGACREM
3	**1320024**	19200 - 16A 250V - 1/8"	1.7	SPINEL SR.000.066.003	ESSELUX - MINIMINILUX - RONDOLUX - UNOLUX
4	**1320019**	ES31 - 0.5A 250V - 1/8"	1.5	ASTORIA/CMA 20158	PLUS4YOU
4	**1320019**	ES31 - 0.5A 250V - 1/8"	1.5	WEGA WY20158	CONCEPT
4	**1320020**	ES31 - 0.5A 250V - 1/8"	2.0	ASTORIA/CMA 20157	PLUS4YOU
4	**1320020**	ES31 - 0.5A 250V - 1/8"	2.0	WEGA WY20157	CONCEPT
5	**1320018**	MBS1900 - 4.5/5.5VDC - 1/4"	0÷16	ASTORIA/CMA 18255050	PLUS4YOU
5	**1320018**	MBS1900 - 4.5/5.5VDC - 1/4"	0÷16	WEGA WY18255050	CONCEPT
6	**1320025**	PS15.01 - 15A 250V - 1/4"	0.9÷1.7	VIBIEMME ELETPREDOMSU	DOMOBAR - DOMOBARJUNIOR - DOMOBARSUPER - DOSAPLUS

PRESSOSTATI VARI
PRESSURE SWITCHES VARIOUS
DRUCKSCHALTER VERSCHIEDEN
PRESOSTATOS VARIOS

1

2

3

Photo	LF Code	Model	Scale (bar)	Suitable for	For machine model
1	**5059572**	XP700 - 1/4"	1.8	SANREMO 10602060B	TREVISO LX
2	**3320500**	---	56/25 mm	RANCILIO 34200061	AUDREY - EPOCA - KATHY - LUCY - S20
3	**5031294**	2T85	0-4	RANCILIO 34200288	CLASSE10 - CLASSE6 - CLASSE7 - CLASSE8 - CLASSE9 - EPOCA

RACCORDI DIRITTI UNIVERSALI
UNIVERSAL COUPLINGS STRAIGHT
UNIVERSALANSCHLÜSSE GERADE
RACORES UNIVERSALES DERECHOS

1

2

3

Photo	LF Code	Dimensions
1	**1349111**	ø 1/8"M-1/4"M
1	**1349110**	ø 1/8"M-3/8"M
1	**1349102**	ø 1/4"M-1/4"M
1	**1349112**	ø 1/4"M-3/8"M
1	**1349018**	ø 3/8"M-1/4"M
1	**1349103**	ø 3/8"M-3/8"M
1	**1349113**	ø 3/8"M-1/2"M
1	**1349114**	ø 3/8"M-3/4"M
1	**5067382**	ø 3/8"M-9/16"M
1	**3349617**	ø 1/2"M-1/4"M
1	**1349104**	ø 1/2"M-1/2"M
1	**1349115**	ø 1/2"M-3/4"M
1	**1349105**	ø 3/4"M-3/4"M
2	**1349136**	ø 1/8"M-1/4"F
2	**1349131**	ø 1/8"M-3/8"F
2	**1349137**	ø 1/4"M-1/8"F
2	**1349138**	ø 1/4"M-1/4"F
2	**1349127**	ø 1/4"M-3/8"F
2	**1349134**	ø 3/8"M-1/8"F
2	**1349132**	ø 3/8"M-1/4"F
2	**1349135**	ø 3/8"M-3/8"F
2	**1349128**	ø 3/8"M-1/2"F
2	**1349129**	ø 3/8"M-3/4"F
2	**1349139**	ø 1/2"M-1/4"F
2	**1349133**	ø 1/2"M-3/8"F
2	**1349140**	ø 1/2"M-1/2"F
2	**1349130**	ø 1/2"M-3/4"F
3	**1349176**	ø 1/2"M-1/8"F
3	**1349175**	ø 1/2"M-1/4"F
3	**1349158**	ø 3/4"M-1/2"F

RACCORDI DIRITTI UNIVERSALI
UNIVERSAL COUPLINGS STRAIGHT
UNIVERSALANSCHLÜSSE GERADE
RACORES UNIVERSALES DERECHOS

1

2

3

4

5

Photo	LF Code	Dimensions
1	**3349306**	ø 1/8"F - ø 6/4
1	**3349307**	ø 1/4"F - ø 6/4
2	**3349301**	ø 1/8"M - ø 6/4
2	**3349304**	ø 1/8"M - ø 8/6
2	**3349302**	ø 1/4"M - ø 6/4
2	**3349305**	ø 1/4"M - ø 8/6
2	**3349303**	ø 3/8"M - ø 6/4
3	**1349091**	M6 - ø 6/4
4	**3349308**	ø 6/4
4	**3349309**	ø 8/6
5	**3349310**	ø 6/4
5	**3349311**	ø 8/6

RACCORDI DIRITTI UNIVERSALI
UNIVERSAL COUPLINGS STRAIGHT
UNIVERSALANSCHLÜSSE GERADE
RACORES UNIVERSALES DERECHOS

1

2

3

4

5

Photo	LF Code	Dimensions
1	**3349318**	ø 1/8"M-1/8"M
1	**1349101**	ø 1/8"M-1/8"M
1	**3349321**	ø 1/8"M-1/4"M
1	**3349322**	ø 1/8"M-3/8"M
1	**3349319**	ø 1/4"M-1/4"M
1	**3349323**	ø 1/4"M-3/8"M
1	**3349324**	ø 1/4"M-1/2"M
1	**1349273**	ø 3/8"M-3/8"M
1	**3349325**	ø 3/8"M-1/2"M
1	**3349320**	ø 1/2"M-1/2"M
1	**3349357**	ø 3/4"M-3/4"M
2	**3349330**	ø 1/4"M-1/8"F
2	**3349331**	ø 3/8"M-1/8"F
2	**3349332**	ø 3/8"M-1/4"F
2	**3349333**	ø 1/2"M-1/4"F
2	**3349334**	ø 1/2"M-3/8"F
3	**1349119**	ø 1/8"F-1/4"F
3	**3349335**	ø 1/8"F-3/8"F
3	**1349121**	ø 1/4"F-1/4"F
3	**1349118**	ø 1/4"F-3/8"F
3	**3349336**	ø 1/4"F-1/2"F
3	**1349122**	ø 3/8"F-3/8"F
3	**1349117**	ø 3/8"F-1/2"F
4	**1349126**	ø 1/8"M-1/8"F
4	**3349327**	ø 1/8"M-1/4"F
4	**3349329**	ø 1/4"M-3/8"F
5	**1349120**	ø 1/8"F-1/8"F
5	**1349116**	ø 1/2"F-1/2"F

RACCORDI PORTAGOMMA UNIVERSALI
HOSE-END COUPLINGS UNIVERSAL
SCHLAUCHANSCHLUSS UNIVERSAL
RACORES PORTAGOMA UNIVERSALES

1

2

3

4

Photo	LF Code	Dimensions
1	**3349287**	1/8"M ø 6 mm
1	**1349653**	1/8"M ø 6 mm
1	**3349343**	1/8"M ø 8 mm
1	**3349342**	1/4"M ø 7 mm
1	**3349344**	1/4"M ø 9 mm
1	**3349346**	1/4"M ø 12 mm
1	**3349347**	3/8"M ø 12 mm
1	**3349349**	3/8"M ø 17 mm
1	**1349144**	1/2"M ø 12 mm

Photo	LF Code	Dimensions
1	**3349348**	1/2"M ø 12 mm
1	**3349350**	1/2"M ø 17 mm
2	**1349141**	1/8"M ø 6 mm
2	**1349143**	3/8"M ø 9 mm
2	**3349345**	3/8"M ø 9 mm
2	**1315700**	3/8"M ø 12 mm
3	**1349146**	ø 8 mm
3	**1349147**	ø 10 mm
4	**1349149**	ø 3/8"

RACCORDI PORTAGOMMA UNIVERSALI
HOSE-END COUPLINGS UNIVERSAL
SCHLAUCHANSCHLUSS UNIVERSAL
RACORES PORTAGOMA UNIVERSALES

1

Photo	LF Code	Dimensions
1	**1349654**	ø 1/8" M6

BICONI UNIVERSALI
UNIVERSAL OLIVES
UNIVERSELLE SCHNEIDRINGE
BICONOS UNIVERSALES

1

2

Photo	LF Code	Dimensions
1	**1349174**	ø 4 mm H10
2	**1349184**	ø 6 mm H7

RACCORDI A "L" UNIVERSALI
UNIVERSAL COUPLINGS "L"SHAPED
UNIVERSALANSCHLÜSSE "L" FÖRMIG
RACORES UNIVERSALES EN "L"

1

Photo	LF Code	Dimensions
1	**1349274**	ø 1/8"M-1/8"M
1	**1349079**	ø 1/4"M-1/8"M
1	**1349081**	ø 1/4"M-1/4"M
1	**1349191**	ø 3/8"M-3/8"M

RACCORDI A "L" UNIVERSALI
UNIVERSAL COUPLINGS "L"SHAPED
UNIVERSALANSCHLÜSSE "L" FÖRMIG
RACORES UNIVERSALES EN "L"

1

2

3

Photo	LF Code	Dimensions
1	**1349712**	ø 1/8"F-1/8"F
1	**1349713**	ø 1/4"F-1/4"F
1	**1349714**	ø 3/8"F-3/8"F
1	**1349715**	ø 1/2"F-1/2"F
2	**1349013**	ø 1/8"M-1/8"M
2	**1349710**	ø 1/4"M-1/4"M
2	**1349706**	ø 3/8"M-3/8"M
2	**1349711**	ø 1/2"M-1/2"M
3	**1349716**	ø 1/8"M-1/8"F
3	**1349717**	ø 1/4"M-1/4"F
3	**1349718**	ø 3/8"M-3/8"F
3	**1349719**	ø 1/2"M-1/2"F

RACCORDI A "L" UNIVERSALI
UNIVERSAL COUPLINGS "L"SHAPED
UNIVERSALANSCHLÜSSE "L" FÖRMIG
RACORES UNIVERSALES EN "L"

1

2

3

4

Photo	LF Code	Dimensions
1	**3349314**	ø 1/8"M - ø 6/4
1	**3349315**	ø 1/8"M - ø 8/6
1	**3349317**	ø 1/4"M - ø 6/4
1	**3349316**	ø 1/4"M - ø 8/6
2	**3349351**	ø 1/8"M - ø 6/4
2	**3349352**	ø 1/8"M - ø 8/6
2	**3349354**	ø 1/4"M - ø 6/4
2	**3349353**	ø 1/4"M - ø 8/6
3	**1349196**	ø 1/8"M - ø 6/4
4	**3349312**	ø 6/4
4	**3349313**	ø 8/6

RACCORDI A "T" UNIVERSALI
UNIVERSAL COUPLINGS "T"-SHAPED
UNIVERSALANSCHLÜSSE "T" FÖRMIG
RACORES UNIVERSALES EN "T"

1

Photo	LF Code	Dimensions
1	**1349153**	ø 1/4"M-1/4"M-1/4"M
1	**1349152**	ø 3/8"M-3/8"M-3/8"M
1	**1349151**	ø 1/2"M-1/2"M-1/2"M

RACCORDI A "T" UNIVERSALI
UNIVERSAL COUPLINGS "T"-SHAPED
UNIVERSALANSCHLÜSSE "T" FÖRMIG
RACORES UNIVERSALES EN "T"

1

2

3

4

5

6

Photo	LF Code	Dimensions
1	**3349355**	ø 1/8"F-1/8"F-1/8"F
1	**3349337**	ø 1/4"F-1/4"F-1/4"F
1	**3349338**	ø 3/8"F-3/8"F-3/8"F
1	**3349339**	ø 1/2"F-1/2"F-1/2"F
2	**1349701**	ø 1/8"F-1/8"F-1/8"M
2	**1349702**	ø 1/4"F-1/4"F-1/4"M
2	**1349708**	ø 3/8"F-3/8"F-3/8"M
2	**1349709**	ø 1/2"F-1/2"F-1/2"M
3	**3349356**	ø 1/8"M-1/8"M-1/8"M
3	**3349340**	ø 1/4"M-1/4"M-1/4"M
3	**3349341**	ø 3/8"M-3/8"M-3/8"M
3	**1349700**	ø 1/2"M-1/2"M-1/2"M
4	**1349363**	ø 1/8"M-1/8"F-1/8"F
4	**1349243**	1/4"F-1/4"F-1/4"M
4	**1349241**	ø 3/8"F-3/8"F-3/8"M
5	**1349244**	ø 1/4"M-1/4"M-1/4"F
5	**1349242**	ø 3/8"M-3/8"M-3/8"F
6	**1349240**	ø 3/8"M-3/8"F-3/8"M

RACCORDI DEDICATI ASTORIA/CMA
SPECIFIC COUPLINGS ASTORIA/CMA
SPEZIFISCHE ANSCHLÜSSE ASTORIA/CMA
RACORES ESPECÍFICOS ASTORIA/CMA

1

2

3

4

5

6

Photo	LF Code	Dimensions	Notes	Suitable for	For machine model
1	**1349089**	ø 1/2"	FOR BOILERS - PER CALDAIE	ASTORIA/CMA 23214	COMPACT
1	**1349278**	ø 1/2"M-1/2"M-1/4"F	FOR BOILERS - PER CALDAIE	ASTORIA/CMA 23215	COMPATTA
2	**1349491**	ø 1/4"M-1/4"M-1/4"M	FOR BOILERS - PER CALDAIE	ASTORIA/CMA 43060	ARGENTA - BRAVA - CALYPSO - DENISE
2	**1349086**	ø 3/8"M-3/8"M-1/4"M	FOR BOILERS - PER CALDAIE	ASTORIA/CMA 43033	ARGENTA - BRAVA - CALYPSO - DENISE
3	**1349084**	ø 3/8"M-3/8"M	FOR BOILERS - PER CALDAIE	ASTORIA/CMA 43052	ARGENTA - BRAVA - CALYPSO - DENIS
4	**1349019**	ø 3/8"F-3/8"M	FOR BOILERS - PER CALDAIE	ASTORIA/CMA 43030001	ARGENTA - BRAVA - CALYPSO - DIVINA
5	**1349200**	ø 3/8"M-1/4"M-M8 F	FOR GROUPS - PER GRUPPI	ASTORIA/CMA 25716003	BRAVA - GLORIA - GLORIA R12
3	**1349085**	ø 1/4"M-1/4"M - M8	FOR GROUPS - PER GRUPPI	ASTORIA/CMA 23203001	SIBILLA
2	**1349083**	---	FOR HYDRAULIC - PER IDRAULICA	ASTORIA/CMA 25715001	ARGENTA - BRAVA - DENISE
3	**1349080**	ø 3/8"M-1/8"M	FOR HYDRAULIC - PER IDRAULICA	ASTORIA/CMA 23206	ARGENTA - BRAVA - GLORIA
3	**1349268**	ø 3/8"M-3/8"M	FOR PUMPS - PER POMPE	ASTORIA/CMA 56116001	PLUS4YOU - TANYA
5	**1349082**	ø 3/8"M 3/8"M-FILTER	FOR PUMPS - PER POMPE	ASTORIA/CMA 56116	ARGENTA - DIVINA - GLORIA
5	**1349202**	ø 3/8"M 3/8"M-NO FILTER	FOR PUMPS - PER POMPE	ASTORIA/CMA 25732	ARGENTA - DIVINA - GLORIA
6	**1349267**	ø 1/8"F - ø 7 mm	FOR SOLENOID VALVE - PER ELETTROVALVOLE	ASTORIA/CMA 23221001	PLUS4YOU - SIBILLA

RACCORDI DEDICATI BFC
SPECIFIC COUPLINGS BFC
SPEZIFISCHE ANSCHLÜSSE BFC
RACORES ESPECÍFICOS BFC

1

2

3

4

Photo	LF Code	Dimensions	Notes	Suitable for	For machine model
1	**1349014**	ø 1/2"M-1/2"M	FOR BOILERS - PER CALDAIE	BFC 3510005	CLASSICA - GALILEO - GRANDOGE
2	**1349278**	ø 1/2"M-1/2"M-1/4"F	FOR BOILERS - PER CALDAIE	BFC 3510010	CLASSICA - GALILEO - GRANDOGE
3	**1349283**	ø 3/8"F- ø 10 mm	FOR LEVEL - PER LIVELLO	BFC 3509900	CLASSICA - DELUX - GALILEO - GRANDOGE - IMOLA - LA VITTORIA
4	**1349705**	ø 3/8"M-3/8"M	FOR HYDRAULIC - PER IDRAULICA	BFC 3510101	CLASSICA - DELUX - GALILEO - GRANDOGE - IMOLA - LA VITTORIA

RACCORDI DEDICATI BIANCHI
SPECIFIC COUPLINGS BIANCHI
SPEZIFISCHE ANSCHLÜSSE BIANCHI
RACORES ESPECÍFICOS BIANCHI

1

2

3

Photo	LF Code	Dimensions	Notes	Suitable for	For machine model
1	**1349002**	ø 1/4"M-1/4"M	FOR BOILERS - PER CALDAIE	BIANCHI 04056916	LUCIA - SARA - SOFIA
2	**1349705**	ø 3/8"M-3/8"M	FOR HYDRAULIC - PER IDRAULICA	BIANCHI 04055716	SOFIA
3	**1349272**	ø 1/4"M-1/4"M	FOR WATER TAPS - PER RUBINETTI ACQUA	BIANCHI 04057116	SOFIA

RACCORDI DEDICATI BRASILIA
SPECIFIC COUPLINGS BRASILIA
SPEZIFISCHE ANSCHLÜSSE BRASILIA
RACORES ESPECÍFICOS BRASILIA

1

2

3

Photo	LF Code	Dimensions	Notes	Suitable for	For machine model
1	**1349014**	ø 1/2"M-1/2"M	FOR BOILERS - PER CALDAIE	BRASILIA 07407.0.00.04	CENTURY - GRADISCA - PORTOFINO
2	**1349278**	ø 1/2"M-1/2"M-1/4"F	FOR BOILERS - PER CALDAIE	BRASILIA 07408.0.00.04	CENTURY - GRADISCA - PORTOFINO
3	**1160700**	ø 3/8"M-3/8"M	FOR PUMPS - PER POMPE	BRASILIA 08193.8.00.09	CLASSICA - DECURTIS

RACCORDI DEDICATI CARIMALI
SPECIFIC COUPLINGS CARIMALI
SPEZIFISCHE ANSCHLÜSSE CARIMALI
RACORES ESPECÍFICOS CARIMALI

1

Photo	LF Code	Dimensions	Notes	Suitable for	For machine model
1	**1349278**	ø 1/2"M-1/2"M-1/4"F	FOR BOILERS - PER CALDAIE	CARIMALI 22.01420	PRATICA

RACCORDI DEDICATI CASADIO
SPECIFIC COUPLINGS CASADIO
SPEZIFISCHE ANSCHLÜSSE CASADIO
RACORES ESPECÍFICOS CASADIO

1

Photo	LF Code	Dimensions	Notes	Suitable for	For machine model
1	**1160700**	ø 3/8"M-3/8"M	FOR PUMPS - PER POMPE	CASADIO 925783010	DIECI - VENTI

RACCORDI DEDICATI CIMBALI
SPECIFIC COUPLINGS CIMBALI
SPEZIFISCHE ANSCHLÜSSE CIMBALI
RACORES ESPECÍFICOS CIMBALI

1

2

3

4

5

Photo	LF Code	Dimensions	Notes	Suitable for	For machine model
1	**1349269**	ø 3/8"M-3/8"F	FOR STEAM PIPES - PER TUBI VAPORE	CIMBALI 485-256-018	M39 - M39GT - M39TE
2	**1349046**	---	FOR INLET TAPS - PER RUBINETTI CARICO	CIMBALI 590-571-010	M27 - M28 - M30
3	**1349100**	ø 3/8"NPT-3/8"M	FOR PUMPS - PER POMPE	CIMBALI 532-500-600	M21 - M27 - M28 - M30
4	**1349270**	ø 3/8"M-3/8"M	FOR PUMPS - PER POMPE	CIMBALI 533-100-600	M39GT
5	**1160700**	ø 3/8"M-3/8"M	FOR PUMPS - PER POMPE	CIMBALI 925-783-010	M24 - M39 - M39GT

RACCORDI DEDICATI CONTI
SPECIFIC COUPLINGS CONTI
SPEZIFISCHE ANSCHLÜSSE CONTI
RACORES ESPECÍFICOS CONTI

1

Photo	LF Code	Dimensions	Notes	Suitable for	For machine model
1	**1349100**	ø 3/8"NPT-3/8"M	FOR PUMPS - PER POMPE	CONTI 755200	XEOS2

RACCORDI DEDICATI DELONGHI
SPECIFIC COUPLINGS DELONGHI
SPEZIFISCHE ANSCHLÜSSE DELONGHI
RACORES ESPECÍFICOS DELONGHI

1 2 3 4 5 6

Photo	LF Code	Dimensions	Notes	Suitable for	For machine model
1	**5059578**	5 mm	FOR BOILERS - PER CALDAIE	DELONGHI 5332239200	ESAM5400 - ESAM5400EX
1	**5061932**	6 mm	FOR BOILERS - PER CALDAIE	DELONGHI 5332212900	EABI66.00 - ESAM3600 - ESAM3650 - ESAM5500.M - ESAM6620
2	**5056237**	---	FOR BOILERS - PER CALDAIE	DELONGHI 5332140800	EC420E - EC425BLU - EC430E.B - EC435EX.C - EC435NERO
3	**5074289**	---	FOR BOILERS - PER CALDAIE	DELONGHI 5313218931	EC680 - ESAM02.110 - ESAM04.110 - ESAM2600 - ESAM6700
3	**5074230**	---	FOR BOILERS - PER CALDAIE	DELONGHI ES0063049	CITIZ - ESSENZA
4	**D524003**	---	FOR BOILERS - PER CALDAIE	DELONGHI 7313219401	EC850.M
5	**5076357**	ø 7,9x5,2x5 mm	FOR BOILERS - PER CALDAIE	DELONGHI 5332239300	ECAM22.110 - ECAM23.120 - ECAM26.455 - LATTISSIMA PRO
6	**5070044**	M8x1 - ø 4 mm	FOR BOILERS - PER CALDAIE	DELONGHI 6213210431	EC190 - EC200 - EC221.B - EC250.B - EC400 - EC410

RACCORDI DEDICATI DELONGHI
SPECIFIC COUPLINGS DELONGHI
SPEZIFISCHE ANSCHLÜSSE DELONGHI
RACORES ESPECÍFICOS DELONGHI

1 2 3 4 5

Photo	LF Code	Dimensions	Notes	Suitable for	For machine model
1	**5054442**	---	FOR MILK PITCHERS - PER CARAFFE LATTE	DELONGHI 5513227411	ESAM3500.S - ESAM3550.B - ESAM3600 - ESAM3600.S - ESAM4500
2	**5055962**	---	FOR MILK PITCHERS - PER CARAFFE LATTE	DELONGHI 5513214821	EC850.M - ESAM5500.S EX:2 - ESAM6600
3	**5078018**	---	FOR MILK PITCHERS - PER CARAFFE LATTE	DELONGHI 7313231131	LATTISSIMA PLUS
4	**1315015**	ø 5 mm	FOR HYDRAULIC CIRCUIT - PER CIRCUITO IDRAULICO	DELONGHI 537407	ESAM3500.S - ESAM5400
5	**D525001**	---	---	DELONGHI 7313211921	BARM100 - BARM300 - BARM34 - BARM36 - BAR190 - BAR40 - BAR41 - BAR50

RACCORDI DEDICATI DELONGHI
SPECIFIC COUPLINGS DELONGHI
SPEZIFISCHE ANSCHLÜSSE DELONGHI
RACORES ESPECÍFICOS DELONGHI

1

2

3

4

5

Photo	LF Code	Dimensions	Notes	Suitable for	For machine model
1	**5056239**	ø 1/8"M	FOR SOLENOID VALVE - PER ELETTROVALVOLE	DELONGHI 5332188800	ESAM5400 - ESAM5400EX
2	**5055960**	ø 1/8"M	FOR SOLENOID VALVE - PER ELETTROVALVOLE	DELONGHI 5332196800	ESAM5400 - ESAM5400EX
3	**5055959**	ø 1/8"Mx4 mm	FOR SOLENOID VALVE - PER ELETTROVALVOLE	DELONGHI 5332196900	ESAM04.350.S - ESAM3500.S - ESAM3600 - ESAM4500 - ESAM5450
4	**5075577**	---	FOR SOLENOID VALVE - PER ELETTROVALVOLE	DELONGHI 5313218351	ECAM26.455 - EC850.M - EC860.M - ESAM6750 - ESAM6900.M
5	**D524001**	---	FOR SOLENOID VALVE - PER ELETTROVALVOLE	DELONGHI 7313222431	LATTISSIMA PLUS - LATTISSIMA PRO - LATTISSIMA TOUCH

RACCORDI DEDICATI DELONGHI
SPECIFIC COUPLINGS DELONGHI
SPEZIFISCHE ANSCHLÜSSE DELONGHI
RACORES ESPECÍFICOS DELONGHI

1

2

3

4

Photo	LF Code	Dimensions	Notes	Suitable for	For machine model
1	**5075576**	---	FOR SOLENOID VALVE - PER ELETTROVALVOLE	DELONGHI 5313225171	ECAM22.360.B - ECAM350.55.B - ECAM44.660.B - ETAM29.660.S
2	**5070579**	---	FOR SOLENOID VALVE - PER ELETTROVALVOLE	DELONGHI 5313218341	ECAM350.55.B - ESAM3600.S - ESAM6750 - ESAM6900.M - ETAM36.365.MB
3	**1348135**	---	FOR VIBRATORY PUMP - PER POMPA VIBRAZIONE	DELONGHI ES0063089	CITIZ - ESSENZA
4	**D349008**	---	FOR VIBRATORY PUMP - PER POMPA VIBRAZIONE	DELONGHI ES0055341	CITIZ - CITIZ & MILK

RACCORDI DEDICATI EXPOBAR
SPECIFIC COUPLINGS EXPOBAR
SPEZIFISCHE ANSCHLÜSSE EXPOBAR
RACORES ESPECÍFICOS EXPOBAR

1

2

3

4

5

Photo	LF Code	Dimensions	Notes	Suitable for	For machine model
1	**1349014**	ø 1/2"M-1/2"M	FOR BOILERS - PER CALDAIE	EXPOBAR 30000200	DIAMANT - EB61 - ELEN - G10 - MARKUS
1	**1349278**	ø 1/2"M-1/2"M-1/4"F	FOR BOILERS - PER CALDAIE	EXPOBAR 30000210	DIAMANT - EB61 - ELEN - G10 - MARKUS
2	**1349197**	ø 1/4"M-1/4"M-1/8"M	FOR BOILERS - PER CALDAIE	EXPOBAR 30000110	DIAMANT - ELEN - MARKUS - MEGACREM
3	**1349002**	ø 1/4"M-1/4"M	FOR BOILERS - PER CALDAIE	EXPOBAR 30000215	DIAMANT - EB61 - ELEN - G10 - MARKUS
4	**1349202**	ø 3/8"M 3/8"M-NO FILTER	FOR PUMPS - PER POMPE	EXPOBAR 30000240	EB61 - ELEN - G10 - MARKUS
5	**1349003**	---	FOR INLET TAPS - PER RUBINETTI CARICO	EXPOBAR 30369140	EB61 - NEW ELEGANCE

RACCORDI DEDICATI FAEMA
SPECIFIC COUPLINGS FAEMA
SPEZIFISCHE ANSCHLÜSSE FAEMA
RACORES ESPECÍFICOS FAEMA

1

2

Photo	LF Code	Dimensions	Notes	Suitable for	For machine model
1	**1349100**	ø 3/8"NPT-3/8"M	FOR PUMPS - PER POMPE	FAEMA 532500600	E98 PRESIDENT
2	**1160700**	ø 3/8"M-3/8"M	FOR PUMPS - PER POMPE	FAEMA 925783010	EMBLEMA - ENOVA - E61

RACCORDI DEDICATI FIAMMA RST
SPECIFIC COUPLINGS FIAMMA RST
SPEZIFISCHE ANSCHLÜSSE FIAMMA RST
RACORES ESPECÍFICOS FIAMMA RST

1

2

3

Photo	LF Code	Dimensions	Notes	Suitable for	For machine model
1	**1349014**	ø 1/2"M-1/2"M	FOR BOILERS - PER CALDAIE	FIAMMA RST 5.0.000.0720	ATLANTIC - MARINA - PRESTIGE
2	**1349278**	ø 1/2"M-1/2"M-1/4"F	FOR BOILERS - PER CALDAIE	FIAMMA RST 5.0.000.0723	ATLANTIC - MARINA - PRESTIGE
3	**1349279**	ø 3/8"M - ø 10 mm	FOR BOILERS - PER CALDAIE	FIAMMA RST 4.0.000.0188	PRESTIGE

RACCORDI DEDICATI FIORENZATO CS
SPECIFIC COUPLINGS FIORENZATO CS
SPEZIFISCHE ANSCHLÜSSE FIORENZATO CS
RACORES ESPECÍFICOS FIORENZATO CS

1

Photo	LF Code	Dimensions	Notes	Suitable for	For machine model
1	**1349100**	ø 3/8"NPT-3/8"M	FOR PUMPS - PER POMPE	FIORENZATO A1300008	DUCALE - FENICE - LIDO

RACCORDI DEDICATI FUTURMAT
SPECIFIC COUPLINGS FUTURMAT
SPEZIFISCHE ANSCHLÜSSE FUTURMAT
RACORES ESPECÍFICOS FUTURMAT

1

2

Photo	LF Code	Dimensions	Notes	Suitable for	For machine model
1	**1349278**	ø 1/2"M-1/2"M-1/4"F	FOR BOILERS - PER CALDAIE	FUTURMAT 08306200	E61
2	**1349408**	---	FOR SOLENOID VALVE - PER ELETTROVALVOLE	FUTURMAT 07467400	---

RACCORDI DEDICATI GAGGIA
SPECIFIC COUPLINGS GAGGIA
SPEZIFISCHE ANSCHLÜSSE GAGGIA
RACORES ESPECÍFICOS GAGGIA

1

2

3

Photo	LF Code	Dimensions	Notes	Suitable for	For machine model
1	**1349014**	ø 1/2"M-1/2"M	FOR BOILERS - PER CALDAIE	GAGGIA WGA8001010000	GD - GE
2	**1349098**	---	FOR BOILERS - PER CALDAIE	GAGGIA 4332024000	NEWBABY06
3	**5032429**	---	FOR SOLENOID VALVES - PER ELETTROVALVOLA	GAGGIA 20000592	PLATINUM VISION

RACCORDI DEDICATI GAGGIA SPAGNA
SPECIFIC COUPLINGS GAGGIA SPAGNA
SPEZIFISCHE ANSCHLÜSSE FÜR GAGGIA SPAGNA
RACORES ESPECÍFICOS PARA GAGGIA SPAGNA

1

Photo	LF Code	Dimensions	Notes	Suitable for	For machine model
1	**1349408**	---	FOR SOLENOID VALVE - PER ELETTROVALVOLE	GAGGIA SPAGNA 07467400	---

RACCORDI DEDICATI GRIMAC
SPECIFIC COUPLINGS GRIMAC
SPEZIFISCHE ANSCHLÜSSE GRIMAC
RACORES ESPECÍFICOS GRIMAC

1

2

3

4

5

Photo	LF Code	Dimensions	Notes	Suitable for	For machine model
1	**1349278**	ø 1/2"M-1/2"M-1/4"F	FOR BOILERS - PER CALDAIE	GRIMAC GRC604	ECLISSE - TEN - TWENTY
2	**1349014**	ø 1/2"M-1/2"M	FOR BOILERS - PER CALDAIE	GRIMAC GRC603	ECLISSE - TEN - TWENTY
3	**1349182**	ø 1/8"M-1/8"M	FOR HYDRAULIC - PER IDRAULICA	GRIMAC 1230200008-MG304	AMBRA - MIA - NUVOLA - OPALE
3	**1349250**	ø 1/8"M-1/8"-ø 6 mm	FOR HYDRAULIC - PER IDRAULICA	GRIMAC 1230200008-MG304	AMBRA - MIA - NUVOLA - OPALE
3	**1349251**	ø 1/8"M-1/8"-ø 6 mm	FOR HYDRAULIC - PER IDRAULICA	GRIMAC 1230200009-MG328	AMBRA - NEWCIALDAVAPOR
4	**1349705**	ø 3/8"M-3/8"M	FOR HYDRAULIC - PER IDRAULICA	GRIMAC 1260500004-GR095/1	ECLISSE - TWENTY - ZOLAI
5	**1349100**	ø 3/8"NPT-3/8"M	FOR PUMPS - PER POMPE	GRIMAC A1300008	G11

RACCORDI DEDICATI ITALCREM
SPECIFIC COUPLINGS ITALCREM
SPEZIFISCHE ANSCHLÜSSE FÜR ITALCREM
RACORES ESPECÍFICOS PARA ITALCREM

1

Photo	LF Code	Dimensions	Notes	Suitable for	For machine model
1	**1349408**	---	FOR SOLENOID VALVE - PER ELETTROVALVOLE	ITALCREM 07467400	---

RACCORDI DEDICATI LAVAZZA
SPECIFIC COUPLINGS LAVAZZA
SPEZIFISCHE ANSCHLÜSSE FÜR LAVAZZA
RACORES ESPECÍFICOS PARA LAVAZZA

1

2

3

4

5

6

Photo	LF Code	Dimensions	Notes	Suitable for	For machine model
1	**1349089**	ø 1/2"	FOR BOILERS - PER CALDAIE	LAVAZZA 10066119	LB4700 - LB4700R - LB4701R
1	**1349278**	ø 1/2"M-1/2"M-1/4"F	FOR BOILERS - PER CALDAIE	LAVAZZA 10066132	LB4700 - LB4700R - LB4701R
1	**1349014**	ø 1/2"M-1/2"M	FOR BOILERS - PER CALDAIE	LAVAZZA 10061958	LB4800
2	**1349491**	ø 1/4"M-1/4"M-1/4"M	FOR BOILERS - PER CALDAIE	LAVAZZA 10066112	LB4700 - LB4700R - LB4701R
3	**1349002**	ø 1/4"M-1/4"M	FOR BOILERS - PER CALDAIE	LAVAZZA 10084132	LB4600
3	**1349084**	ø 3/8"M-3/8"M	FOR BOILERS - PER CALDAIE	LAVAZZA 10066342	LB2800 - LB4700 - LB4700R - LB4701R
4	**1349019**	ø 3/8"F-3/8"M	FOR BOILERS - PER CALDAIE	LAVAZZA 10066341	LB4700 - LB4700R - LB4701R
5	**1349082**	ø 3/8"M 3/8"M-FILTER	FOR PUMPS - PER POMPE	LAVAZZA 10066265	LB4700 - LB4700R - LB4701R
5	**1349202**	ø 3/8"M 3/8"M-NO FILTER	FOR PUMPS - PER POMPE	LAVAZZA 10066266	LB4700 - LB4700R - LB4701R
6	**1349272**	ø 1/4"M-1/4"M	FOR HYDRAULIC - PER IDRAULICA	LAVAZZA 10084134	LB4600

RACCORDI DEDICATI MAIRALI
SPECIFIC COUPLINGS MAIRALI
SPEZIFISCHE ANSCHLÜSSE FÜR MAIRALI
RACORES ESPECÍFICOS PARA MAIRALI

1

Photo	LF Code	Dimensions	Notes	Suitable for	For machine model
1	**1349408**	---	FOR SOLENOID VALVE - PER ELETTROVALVOLE	MAIRALI 07467400	---

RACCORDI DEDICATI MCE
SPECIFIC COUPLINGS MCE
SPEZIFISCHE ANSCHLÜSSE MCE
RACORES ESPECÍFICOS MCE

1

2

3

4

5

Photo	LF Code	Dimensions	Notes	Suitable for	For machine model
1	**1349089**	ø 1/2"	FOR BOILERS - PER CALDAIE	MCE 23214	START
1	**1349278**	ø 1/2"M-1/2"M-1/4"F	FOR BOILERS - PER CALDAIE	MCE 23215	START
2	**1349086**	ø 3/8"M-3/8"M-1/4"M	FOR BOILERS - PER CALDAIE	MCE 43033	START
2	**1349491**	ø 1/4"M-1/4"M-1/4"M	FOR BOILERS - PER CALDAIE	MCE 43060	START
3	**1349084**	ø 3/8"M-3/8"M	FOR BOILERS - PER CALDAIE	MCE 43052	START
4	**1349019**	ø 3/8"F-3/8"M	FOR BOILERS - PER CALDAIE	MCE 43030001	START
5	**1349202**	ø 3/8"M 3/8"M-NO FILTER	FOR PUMPS - PER POMPE	MCE 25732	START
5	**1349082**	ø 3/8"M 3/8"M-FILTER	FOR PUMPS - PER POMPE	MCE 56116	START

RACCORDI DEDICATI NUOVA SIMONELLI
SPECIFIC COUPLINGS NUOVA SIMONELLI
SPEZIFISCHE ANSCHLÜSSE NUOVA SIMONELLI
RACORES ESPECÍFICOS NUOVA SIMONELLI

1

2

3

4

Photo	LF Code	Dimensions	Notes	Suitable for	For machine model
1	**1349034**	---	FOR BOILERS - PER CALDAIE	NUOVA SIMONELLI 07300213.10	AURELIA - AURELIAII - PREMIER
2	**1349032**	ø 3/8"M-3/8"M - M8	FOR GROUPS - PER GRUPPI	NUOVA SIMONELLI 07300172	APPIA - APPIA COMPACT - AURELIA - AURELIAII
3	**1349030**	ø 3/8"M-1/4"M	FOR HYDRAULIC - PER IDRAULICA	NUOVA SIMONELLI 07300055	AURELIA - AURELIAII - MAC2000
4	**1349029**	---	FOR LEVELS - PER LIVELLI	NUOVA SIMONELLI 07300109	APPIA - AURELIA - MAC2000

RACCORDI DEDICATI ORCHESTRALE
SPECIFIC COUPLINGS ORCHESTRALE
SPEZIFISCHE ANSCHLÜSSE ORCHESTRALE
RACORES ESPECÍFICOS ORCHESTRALE

1

2

3

4

5

Photo	LF Code	Dimensions	Notes	Suitable for	For machine model
1	**1349089**	ø 1/2"	FOR BOILERS - PER CALDAIE	ORCHESTRALE D23214	ETNICA - PHONICA
1	**1349278**	ø 1/2"M-1/2"M-1/4"F	FOR BOILERS - PER CALDAIE	ORCHESTRALE D23215	ETNICA - PHONICA
2	**1349491**	ø 1/4"M-1/4"M-1/4"M	FOR BOILERS - PER CALDAIE	ORCHESTRALE D43060	ETNICA - PHONICA
3	**1349084**	ø 3/8"M-3/8"M	FOR BOILERS - PER CALDAIE	ORCHESTRALE D43052	ETNICA - PHONICA
4	**1349019**	ø 3/8"F-3/8"M	FOR BOILERS - PER CALDAIE	ORCHESTRALE D43030001	ETNICA - PHONICA
5	**1349082**	ø 3/8"M 3/8"M-FILTER	FOR PUMPS - PER POMPE	ORCHESTRALE D56116	ETNICA - PHONICA
5	**1349202**	ø 3/8"M 3/8"M-NO FILTER	FOR PUMPS - PER POMPE	ORCHESTRALE D25732	ETNICA - PHONICA

RACCORDI DEDICATI PAVONI
SPECIFIC COUPLINGS PAVONI
SPEZIFISCHE ANSCHLÜSSE PAVONI
RACORES ESPECÍFICOS PAVONI

1

2

3

Photo	LF Code	Dimensions	Notes	Suitable for	For machine model
1	**1349014**	ø 1/2"M-1/2"M	FOR BOILERS - PER CALDAIE	PAVONI 312028	BAR - BART - CAFE - PUB
2	**1349100**	ø 3/8"NPT-3/8"M	FOR PUMPS - PER POMPE	PAVONI 31104001	PUNO - PTRE - P90
3	**1349045**	---	FOR PRESSURE GAUGE - PER MANOMETRO	PAVONI 3120104	PROFESSIONAL - STRADIVARI

RACCORDI DEDICATI RANCILIO
SPECIFIC COUPLINGS RANCILIO
SPEZIFISCHE ANSCHLÜSSE RANCILIO
RACORES ESPECÍFICOS RANCILIO

1

Photo	LF Code	Dimensions	Notes	Suitable for	For machine model
1	**1523802**	ø 1/8"M-1/4"M	FOR INLET TAP - PER RUBINETTO CARICO	RANCILIO 10720002	S20 - Z11

RACCORDI DEDICATI ROYAL
SPECIFIC COUPLINGS ROYAL
SPEZIFISCHE ANSCHLÜSSE FÜR ROYAL
RACORES ESPECÍFICOS PARA ROYAL

1

2

3

4

Photo	LF Code	Dimensions	Notes	Suitable for	For machine model
1	**1349014**	ø 1/2"M-1/2"M	FOR BOILERS - PER CALDAIE	ROYAL 3510005	DIADEMA - DOGARESSA - SYNCHRO - TECNICA - VALLELUNGA LEVA
2	**1349278**	ø 1/2"M-1/2"M-1/4"F	FOR BOILERS - PER CALDAIE	ROYAL 3510010	DIADEMA - DOGARESSA - SYNCHRO - TECNICA - VALLELUNGA LEVA
3	**1349283**	ø 3/8"F- ø 10 mm	FOR LEVEL - PER LIVELLO	ROYAL 3509900	DIADEMA - DOGARESSA - SYNCHRO - TECNICA - VALLELUNGA LEVA
4	**1349705**	ø 3/8"M-3/8"M	FOR HYDRAULIC - PER IDRAULICA	ROYAL 3510101	DIADEMA - DOGARESSA - SYNCHRO - TECNICA - VALLELUNGA LEVA

RACCORDI DEDICATI SAECO
SPECIFIC COUPLINGS SAECO
SPEZIFISCHE ANSCHLÜSSE SAECO
RACORES ESPECÍFICOS SAECO

1

2

3

4

Photo	LF Code	Dimensions	Notes	Suitable for	For machine model
1	**1349014**	ø 1/2"M-1/2"M	FOR BOILERS - PER CALDAIE	SAECO WGA8001010000	AROMA
2	**1349095**	ø 1/8"M - ø 4 mm	FOR HYDRAULIC - PER IDRAULICA	SAECO 11008875	MAGIC - ROYAL - STRATOS
3	**5051600**	ø 4,5 mm	FOR CAPPUCCINO MAKER - PER CAPPUCCINATORE	SAECO 9991.122.050	ROYAL PROFESSIONAL
4	**5032429**	---	FOR SOLENOID VALVES - PER ELETTROVALVOLA	SAECO 20000592	ODEA - ODEA GIRO - TALEA

RACCORDI DEDICATI SAN MARCO
SPECIFIC COUPLINGS SAN MARCO
SPEZIFISCHE ANSCHLÜSSE SAN MARCO
RACORES ESPECÍFICOS SAN MARCO

1

2

3

4

5

6

Photo	LF Code	Dimensions	Notes	Suitable for	For machine model
1	**1349395**	ø 3/8"M-1/2"M	FOR GROUPS - PER GRUPPI	SAN MARCO 206213	NEW 105 - 100 - 105 - 85 - 95
1	**1349397**	---	FOR GROUPS - PER GRUPPI	SAN MARCO 206296	NEW 105 - 100 - 105 - 95
2	**1349396**	---	FOR GROUPS - PER GRUPPI	SAN MARCO 206214	NEW 105 - 100 - 105 - 85 - 95
3	**1349039**	---	FOR HYDRAULIC - PER IDRAULICA	SAN MARCO 205299	LEVA - 105 - 85 - 95
4	**1349088**	ø 1/4"M	FOR HYDRAULIC - PER IDRAULICA	SAN MARCO 206235	NEW 105 - 100 - 105 - 95
5	**1349087**	ø 1/8"M-1/8"M-M8 F	FOR HYDRAULIC - PER IDRAULICA	SAN MARCO 206282	NEW 15 - 100 - 105 - 95
6	**1349202**	ø 3/8"M 3/8"M-NO FILTER	FOR PUMPS - PER POMPE	SAN MARCO 206255	100 - 105 - 85 - 95

RACCORDI DEDICATI SANREMO
SPECIFIC COUPLINGS SANREMO
SPEZIFISCHE ANSCHLÜSSE SANREMO
RACORES ESPECÍFICOS SANREMO

1

2

3

Photo	LF Code	Dimensions	Notes	Suitable for	For machine model
1	**1349227**	ø 1/8"M-1/8"M-ø 6 mm	FOR BOILERS - PER CALDAIE	SANREMO 10852030A	AMALFI - CAPRI - MILANO LX - TORINO
2	**5055817**	ø 1/8"M - ø 5 mm	FOR GROUPS - PER GRUPPI	SANREMO 10255028A	AMALFI - CAPRI - MILANO LX - PISA - ZOE
3	**1349284**	ø 3/8"F-3/8"M	FOR PUMPS - PER POMPE	SANREMO 10355150A	PORTOFINO - TORINO - ZOE

RACCORDI DEDICATI SCALA
SPECIFIC COUPLINGS SCALA
SPEZIFISCHE ANSCHLÜSSE SCALA
RACORES ESPECÍFICOS SCALA

1

2

Photo	LF Code	Dimensions	Notes	Suitable for	For machine model
1	**1349278**	ø 1/2"M-1/2"M-1/4"F	FOR BOILERS - PER CALDAIE	SCALA R5	BUTTERFLY - CARMEN - EROICA - IRIS
2	**1349014**	ø 1/2"M-1/2"M	FOR BOILERS - PER CALDAIE	SCALA R6	BUTTERFLY - CARMEN - EROICA - IRIS - NORMA

RACCORDI DEDICATI SPAZIALE
SPECIFIC COUPLINGS SPAZIALE
SPEZIFISCHE ANSCHLÜSSE SPAZIALE
RACORES ESPECÍFICOS SPAZIALE

1

2

3

4

Photo	LF Code	Dimensions	Notes	Suitable for	For machine model
1	**1349078**	ø 1/4"M-1/8"F	FOR GROUPS - PER GRUPPI	SPAZIALE 00627	PROFESSIONALE - S1 - S40
2	**1349372**	---	FOR GROUPS - PER GRUPPI	SPAZIALE 01511	---
3	**1349373**	---	FOR GROUPS - PER GRUPPI	SPAZIALE 01512	S40 - S5 - S5 COMPACT - S8 - S8 COMPACT - S9
4	**1349076**	ø 1/4"M-1/4"M	FOR HYDRAULIC - PER IDRAULICA	SPAZIALE 08364	S2 - S5 - S5 COMPACT

RACCORDI DEDICATI VIBIEMME
SPECIFIC COUPLINGS VIBIEMME
SPEZIFISCHE ANSCHLÜSSE VIBIEMME
RACORES ESPECÍFICOS VIBIEMME

1

2

3

4

Photo	LF Code	Dimensions	Notes	Suitable for	For machine model
1	**1349014**	ø 1/2"M-1/2"M	FOR BOILERS - PER CALDAIE	VIBIEMME RACCP427	DOMOBAR SUPER - DOSAPLUS - EVOLUTION
2	**1349278**	ø 1/2"M-1/2"M-1/4"F	FOR BOILERS - PER CALDAIE	VIBIEMME RACCP428	DOMOBAR JUNIOR - DOMOBAR SUPER
3	**1349002**	ø 1/4"M-1/4"M	FOR BOILERS - PER CALDAIE	VIBIEMME RACCP429	CHIMAERA - CUBO - DOSAPLUS - KOMETA
4	**1349275**	ø 1/4"F - M12	FOR BOILERS - PER CALDAIE	VIBIEMME PORTBULTERRID	DOMOBAR - DOMOBARJUNIOR

RACCORDI DEDICATI VICTORIA ARDUINO
SPECIFIC COUPLINGS VICTORIA ARDUINO
SPEZIFISCHE ANSCHLÜSSE VICTORIA ARDUINO
RACORES ESPECÍFICOS VICTORIA ARDUINO

1

2

3

4

Photo	LF Code	Dimensions	Notes	Suitable for	For machine model
1	**1349034**	---	FOR BOILERS - PER CALDAIE	VICTORIA ARDUINO 07300213.10	ADONIS - ATHENA - VENUS CENTURY
2	**1349030**	ø 3/8"M-1/4"M	FOR HYDRAULIC - PER IDRAULICA	VICTORIA ARDUINO 07300055	ADONIS
3	**1349032**	ø 3/8"M-3/8"M - M8	FOR GROUPS - PER GRUPPI	VICTORIA ARDUINO 07300172	ADONIS ATHENA - VENUS CENTURY
4	**1349029**	---	FOR LEVELS - PER LIVELLI	VICTORIA ARDUINO 07300109	ATHENA LEVA - ATHENA

RACCORDI DEDICATI VISACREM
SPECIFIC COUPLINGS VISACREM
SPEZIFISCHE ANSCHLÜSSE FÜR VISACREM
RACORES ESPECÍFICOS PARA VISACREM

1

Photo	LF Code	Dimensions	Notes	Suitable for	For machine model
1	**1349408**	---	FOR SOLENOID VALVE - PER ELETTROVALVOLE	VISACREM 07467400	---

RACCORDI DEDICATI WEGA
SPECIFIC COUPLINGS WEGA
SPEZIFISCHE ANSCHLÜSSE WEGA
RACORES ESPECÍFICOS WEGA

1

2

3

4

5

6

Photo	LF Code	Dimensions	Notes	Suitable for	For machine model
1	**1349089**	ø 1/2"	FOR BOILERS - PER CALDAIE	WEGA WY23214	AIRY - ATLAS - ATLAS 10 - COLOSSEUM
1	**1349278**	ø 1/2"M-1/2"M-1/4"F	FOR BOILERS - PER CALDAIE	WEGA WY23215	AIRY - ATLAS - ATLAS 10 - COLOSSEUM
2	**1349086**	ø 3/8"M-3/8"M-1/4"M	FOR BOILERS - PER CALDAIE	WEGA WY43033	ATLAS - COLOSSEUM - COMBI NOVA
2	**1349491**	ø 1/4"M-1/4"M-1/4"M	FOR BOILERS - PER CALDAIE	WEGA WY43060	AIRY - ATLAS - ATLAS 10 - COLOSSEUM
3	**1349084**	ø 3/8"M-3/8"M	FOR BOILERS - PER CALDAIE	WEGA WY43052	AIRY - ATLAS - ATLAS 10 - COLOSSEUM
4	**1349019**	ø 3/8"F-3/8"M	FOR BOILERS - PER CALDAIE	WEGA WY43030001	ATLAS 10 - COLOSSEUM - ESPRESSA
3	**1349080**	ø 3/8"M-1/8"M	FOR HYDRAULIC - PER IDRAULICA	WEGA WY23206	MININOVA - VENUS
2	**1349083**	---	FOR HYDRAULIC - PER IDRAULICA	WEGA WY25715001	SPHERA
5	**1349082**	ø 3/8"M 3/8"M-FILTER	FOR PUMPS - PER POMPE	WEGA WY56116	AIRY - ATLAS - COMBI NOVA
3	**1349268**	ø 3/8"M-3/8"M	FOR PUMPS - PER POMPE	WEGA WY56116001	ATLAS 10 - CONCEPT - PEGASO
5	**1349202**	ø 3/8"M 3/8"M-NO FILTER	FOR PUMPS - PER POMPE	WEGA WY25732	AIRY - ATLAS - COMBI NOVA
5	**1349085**	ø 1/4"M-1/4"M - M8	FOR GROUPS - PER GRUPPI	WEGA WY23203001	VENUS
6	**1349267**	ø 1/8"F - ø 7 mm	FOR SOLENOID VALVE - PER ELETTROVALVOLE	WEGA WY23221001	CONCEPT - VENUS

REGOLATORI DI LIVELLO ASTORIA/CMA
LEVEL REGULATORS ASTORIA/CMA
NIVEAUREGLER ASTORIA/CMA
REGULADORES DE NIVEL ASTORIA/CMA

1

2

3

4

5

6

Photo	LF Code	Features	Suitable for	For machine model
1	**1341311**	RL/1E/2C/F 230/240V	ASTORIA/CMA 18080	ARGENTA - BRAVA - DENISE - DIVINA - DORA - GLORIA - LISA
1	**1341603**	RL/1E/2C/F 115V	ASTORIA/CMA 18081001	ARGENTA - BRAVA - DENISE - DIVINA - DORA - GLORIA - LISA
2	**1054571**	RL01E/1S/4C/F 240V	ASTORIA/CMA 18045	CK - CKX
3	**1341304**	RL30/1E/2C/11 230V	ASTORIA/CMA	OLD MODELS - MODELLI VECCHI
4	**1341700**	RL30/1E/8 230/240V	ASTORIA/CMA	OLD MODELS - MODELLI VECCHI
5	**1341308**	RL40/1E/11 230/240V	ASTORIA/CMA	OLD MODELS - MODELLI VECCHI
6	**1341307**	RL40/1E/11 24V	ASTORIA/CMA	OLD MODELS - MODELLI VECCHI

REGOLATORI DI LIVELLO BEZZERA
LEVEL REGULATORS BEZZERA
NIVEAUREGLER BEZZERA
REGULADORES DE NIVEL BEZZERA

1

2

3

4

Photo	LF Code	Features	Suitable for	For machine model
1	**1341305**	RL30/1E/2C/8 230/240V	BEZZERA 7661025	B2000 - B2000 AL - B2006 AL
2	**1341018**	RL30/4ESS/F 230V	BEZZERA 7661034.01	B2006 - B2009 COMPACT - B2013 - B4000 - B6000
3	**1341303**	RL40/3ES/F 230V	BEZZERA 7661016	B3000
4	**1341611**	RL40/3ES/F 120V	BEZZERA 7661002	B3000

REGOLATORI DI LIVELLO BFC
LEVEL REGULATORS BFC
NIVEAUREGLER BFC
REGULADORES NIVEL BFC

1

2

Photo	LF Code	Features	Suitable for	For machine model
1	**1341301**	NRL30/1E-2C/F 230V	BFC 5030363	CLASSICA - DELUX - GALILEO - GRANDOGE - IMOLA - LA VITTORIA - LIRA
1	**5056960**	NRL30/1E-2C/F 115V	BFC 5030312	CLASSICA - DELUX - GALILEO - GRANDOGE - IMOLA - LA VITTORIA - LIRA
2	**5501397**	RL30/3ES/F/G 230V	BFC 5030320	CLASSICA - DELUX - GALILEO - GRANDOGE - IMOLA - JUNIOR

REGOLATORI DI LIVELLO BIANCHI
LEVEL REGULATORS BIANCHI
NIVEAUREGLER BIANCHI
REGULADORES DE NIVEL BIANCHI

1

Photo	LF Code	Features	Suitable for	For machine model
1	**1341301**	NRL30/1E-2C/F 230V	BIANCHI 26053616	SARA
1	**5056960**	NRL30/1E-2C/F 115V	BIANCHI	SARA

REGOLATORI DI LIVELLO BRASILIA
LEVEL REGULATORS BRASILIA
NIVEAUREGLER BRASILIA
REGULADORES DE NIVEL BRASILIA

1

2

Photo	LF Code	Features	Suitable for	For machine model
1	**1054538**	230V	BRASILIA 09522.2.00.08	CADETTA - CENTURY - DECURTIS - FIRENZE - GRADISCA
2	**1054539**	NRL30/1E-2C/8 230V	BRASILIA 01871.2.00.08	CENTURY - FIRENZE - GRADISCA - PORTOFINO - 100

REGOLATORI DI LIVELLO CARIMALI
LEVEL REGULATORS CARIMALI
NIVEAUREGLER CARIMALI
REGULADORES DE NIVEL CARIMALI

1

Photo	LF Code	Features	Suitable for	For machine model
1	**5501397**	RL30/3ES/F/G 230V	CARIMALI 96.00470	UNO

REGOLATORI DI LIVELLO CIMBALI
LEVEL REGULATORS CIMBALI
NIVEAUREGLER CIMBALI
REGULADORES DE NIVEL CIMBALI

1

Photo	LF Code	Features	Suitable for	For machine model
1	**1341002**	RL30/3ES/F 200/240V	CIMBALI 531-691-008	JUNIOR

REGOLATORI DI LIVELLO ECM
LEVEL REGULATORS ECM
NIVEAUREGLER ECM
REGULADORES DE NIVEL ECM

1

Photo	LF Code	Features	Suitable for	For machine model
1	**1341017**	230/240V 50/60Hz	ECM C199901135	GIOTTO

REGOLATORI DI LIVELLO ELEKTRA
LEVEL REGULATORS ELEKTRA
NIVEAUREGLER ELEKTRA
REGULADORES DE NIVEL ELEKTRA

1

Photo	LF Code	Features	Suitable for	For machine model
1	**7102844**	NRL30/1E-2C/F 230V	ELEKTRA 00189035	MODERN - SIXTIES - CLASSIC

REGOLATORI DI LIVELLO EXPOBAR
LEVEL REGULATORS EXPOBAR
NIVEAUREGLER EXPOBAR
REGULADORES DE NIVEL EXPOBAR

1

Photo	LF Code	Features	Suitable for	For machine model
1	**1359007**	RL01E/SIC/F+LED 240V	EXPOBAR 60100200	EB61 - EXPRESSO - MONROC

REGOLATORI DI LIVELLO FIAMMA RST
LEVEL REGULATORS FIAMMA RST
NIVEAUREGLER FIAMMA RST
REGULADORES DE NIVEL FIAMMA RST

1

Photo	LF Code	Features	Suitable for	For machine model
1	**1341046**	RST1 230V	FIAMMA 5.0.000.1035	ATLANTIC - MARINA - PRESTIGE

REGOLATORI DI LIVELLO FIORENZATO CS
LEVEL REGULATORS FIORENZATO CS
NIVEAUREGLER FIORENZATO CS
REGULADORES DE NIVEL FIORENZATO CS

1

2

Photo	LF Code	Features	Suitable for	For machine model
1	**1341017**	230/240V 50/60Hz	FIORENZATO A1500005	BRICOLETTA - COLOMBINA - DUCALE - VOLANTE
2	**1341015**	230/240V 50/60Hz 8A	FIORENZATO A1500082	DUCALE - FENICE - LIDO - PIAZZA SAN MARCO

REGOLATORI DI LIVELLO FUTURMAT
LEVEL REGULATORS FUTURMAT
NIVEAUREGLER FUTURMAT
REGULADORES DE NIVEL FUTURMAT

1

Photo	LF Code	Features	Suitable for	For machine model
1	**1341200**	230V 50/60Hz 5A	FUTURMAT 08261307	E61 - PALANCA - RIMINI

REGOLATORI DI LIVELLO GAGGIA
LEVEL REGULATORS GAGGIA
NIVEAUREGLER GAGGIA
REGULADORES DE NIVEL GAGGIA

1

2

3

4

Photo	LF Code	Features	Suitable for	For machine model
1	**1341041**	RL 1E/2C/F 230V	GAGGIA DM1940/02	XE
2	**1054571**	RL01E/1S/4C/F 240V	GAGGIA 5008003000	TS
3	**1341304**	RL30/1E/2C/11 230V	GAGGIA DM0643	E90
4	**1341042**	RL30/1E/2C/F 230V	GAGGIA WGADM1940	GE - FD2000 - FE2000

REGOLATORI DI LIVELLO GAGGIA SPAGNA
LEVEL REGULATORS GAGGIA SPAGNA
NIVEAUREGLER GAGGIA SPAGNA
REGULADORES DE NIVEL GAGGIA SPAGNA

1

Photo	LF Code	Features	Suitable for	For machine model
1	**1341200**	230V 50/60Hz 5A	GAGGIA SPAGNA 08261307	NERA - PALANCA

REGOLATORI DI LIVELLO GRIMAC
LEVEL REGULATORS GRIMAC
NIVEAUREGLER GRIMAC
REGULADORES DE NIVEL GRIMAC

1

2

3

Photo	LF Code	Features	Suitable for	For machine model
1	**1341015**	230/240V 50/60Hz 8A	GRIMAC A1500082	G11
2	**1341036**	MFC2SG 220V	GRIMAC 1040100002	MIA - NEWCIALDAVAPOR - VAPORDOUBLE
3	**1341316**	RLC302CF 230V	GRIMAC 1040100006-GR778	ECLISSE - G10 - TEN - TWENTY - ZOLAI - ZOLAII

REGOLATORI DI LIVELLO ITALCREM
LEVEL REGULATORS ITALCREM
NIVEAUREGLER ITALCREM
REGULADORES DE NIVEL ITALCREM

1

Photo	LF Code	Features	Suitable for	For machine model
1	**1341200**	230V 50/60Hz 5A	ITALCREM 08261307	CAPRI - PALANCA

REGOLATORI DI LIVELLO MAGISTER
LEVEL REGULATORS MAGISTER
NIVEAUREGLER MAGISTER
REGULADORES DE NIVEL MAGISTER

1

Photo	LF Code	Features	Suitable for	For machine model
1	**1341301**	NRL30/1E-2C/F 230V	MAGISTER 180028	---
1	**5056960**	NRL30/1E-2C/F 115V	MAGISTER	---

REGOLATORI DI LIVELLO MAIRALI
LEVEL REGULATORS MAIRALI
NIVEAUREGLER MAIRALI
REGULADORES DE NIVEL MAIRALI

1

Photo	LF Code	Features	Suitable for	For machine model
1	**1341200**	230V 50/60Hz 5A	MAIRALI 08261307	GIULIETTA - PALANCA

REGOLATORI DI LIVELLO MARZOCCO
LEVEL REGULATORS MARZOCCO
NIVEAUREGLER MARZOCCO
REGULADORES DE NIVEL MARZOCCO

1

Photo	LF Code	Features	Suitable for	For machine model
1	**1341009**	RL30/1E/2C/F 230/240V	MARZOCCO LA050	FB/70 - LINEA

REGOLATORI DI LIVELLO MCE
LEVEL REGULATORS MCE
NIVEAUREGLER MCE
REGULADORES DE NIVEL MCE

1

Photo	LF Code	Features	Suitable for	For machine model
1	**1341311**	RL/1E/2C/F 230/240V	MCE 18080001	START
1	**1341603**	RL/1E/2C/F 115V	MCE 18081001	START

REGOLATORI DI LIVELLO NUOVA SIMONELLI
LEVEL REGULATORS NUOVA SIMONELLI
NIVEAUREGLER NUOVA SIMONELLI
REGULADORES DE NIVEL NUOVA SIMONELLI

1

2

3

Photo	LF Code	Features	Suitable for	For machine model
1	**1341305**	RL30/1E/2C/8 230/240V	NUOVA SIMONELLI 09000015	APPIA - MACCUP - MAC2000 - PREMIER - PROGRAMVIP
2	**1341004**	RL30/2S/3R 230V	NUOVA SIMONELLI 04900195	OSCAR
3	**3341007**	---	NUOVA SIMONELLI 18010794	APPIA - MACCUP - MAC2000 - PREMIER - PROGRAMVIP

REGOLATORI DI LIVELLO ORCHESTRALE
LEVEL REGULATORS ORCHESTRALE
NIVEAUREGLER ORCHESTRALE
REGULADORES DE NIVEL ORCHESTRALE

1

Photo	LF Code	Features	Suitable for	For machine model
1	**1341043**	NRL30/2E/2R/F 230V	ORCHESTRALE D18080005	ETNICA - PHONICA

REGOLATORI DI LIVELLO PAVONI
LEVEL REGULATORS PAVONI
NIVEAUREGLER PAVONI
REGULADORES DE NIVEL PAVONI

1

Photo	LF Code	Features	Suitable for	For machine model
1	**1341301**	NRL30/1E-2C/F 230V	PAVONI 438050	BAR - BART - PUB
1	**5056960**	NRL30/1E-2C/F 115V	PAVONI	BAR - BART - PUB

REGOLATORI DI LIVELLO RANCILIO
LEVEL REGULATORS RANCILIO
NIVEAUREGLER RANCILIO
REGULADORES DE NIVEL RANCILIO

1

Photo	LF Code	Features	Suitable for	For machine model
1	**1341301**	NRL30/1E-2C/F 230V	RANCILIO 34070029	CLASSE10 - CLASSE6 - CLASSE8 - EPOCA
1	**5056960**	NRL30/1E-2C/F 115V	RANCILIO 34070028	CLASSE10 - CLASSE6 - CLASSE8 - EPOCA

REGOLATORI DI LIVELLO ROYAL
LEVEL REGULATORS ROYAL
NIVEAUREGLER ROYAL
REGULADORES NIVEL ROYAL

1

2

Photo	LF Code	Features	Suitable for	For machine model
1	**1341301**	NRL30/1E-2C/F 230V	ROYAL 5030363	DIADEMA - DOGARESSA - SYNCHRO - TECNICA - VALLELUNGA
1	**5056960**	NRL30/1E-2C/F 115V	ROYAL 5030312	DIADEMA - DOGARESSA - SYNCHRO - TECNICA - VALLELUNGA
2	**5501397**	RL30/3ES/F/G 230V	ROYAL 5030320	SYNCHRO 1GR - VALLELUNGA 1GR

REGOLATORI DI LIVELLO SAECO
LEVEL REGULATORS SAECO
NIVEAUREGLER SAECO
REGULADORES DE NIVEL SAECO

1

Photo	LF Code	Features	Suitable for	For machine model
1	**1341042**	RL30/1E/2C/F 230V	SAECO WGADM1940	AROMA

REGOLATORI DI LIVELLO SAN MARCO
LEVEL REGULATORS SAN MARCO
NIVEAUREGLER SAN MARCO
REGULADORES DE NIVEL SAN MARCO

1

2

Photo	LF Code	Features	Suitable for	For machine model
1	**1054568**	B924 220V	SAN MARCO 108456	95PRACTICAL - 95SPRINT
2	**1054567**	RL30/1E/2C/F 230/240V	SAN MARCO 108055	95 - LEVA

REGOLATORI DI LIVELLO SANREMO
LEVEL REGULATORS SANREMO
NIVEAUREGLER SANREMO
REGULADORES DE NIVEL SANREMO

1

Photo	LF Code	Features	Suitable for	For machine model
1	**1341301**	NRL30/1E-2C/F 230V	SANREMO 10112010A	CAPRI - VENEZIA
1	**5056960**	NRL30/1E-2C/F 115V	SANREMO 10112011	CAPRI - VENEZIA

REGOLATORI DI LIVELLO SCALA
LEVEL REGULATORS SCALA
NIVEAUREGLER SCALA
REGULADORES DE NIVEL SCALA

1

Photo	LF Code	Features	Suitable for	For machine model
1	**1341301**	NRL30/1E-2C/F 230V	SCALA C-0069	CARMEN ECO
1	**5056960**	NRL30/1E-2C/F 115V	SCALA	CARMEN ECO

REGOLATORI DI LIVELLO SPAZIALE
LEVEL REGULATORS SPAZIALE
NIVEAUREGLER SPAZIALE
REGULADORES DE NIVEL SPAZIALE

1

2

Photo	LF Code	Features	Suitable for	For machine model
1	**1054007**	230V	SPAZIALE 01964	EC - 3000
2	**5048108**	24V	SPAZIALE 02948	NEW EP

REGOLATORI DI LIVELLO VIBIEMME
LEVEL REGULATORS VIBIEMME
NIVEAUREGLER VIBIEMME
REGULADORES DE NIVEL VIBIEMME

1

2

Photo	LF Code	Features	Suitable for	For machine model
1	**1341006**	RL30/1E/2C/C 230V	VIBIEMME ELETREGLIV	DOMOBARSUPER - KOMETA - MINIMAX - REPLICA
2	**1341044**	PIC DELUXE	VIBIEMME ELETREGLIVDSJ	DOMOBARJUNIOR

REGOLATORI DI LIVELLO VICTORIA ARDUINO
LEVEL REGULATORS VICTORIA ARDUINO
NIVEAUREGLER VICTORIA ARDUINO
REGULADORES DE NIVEL VICTORIA ARDUINO

1

Photo	LF Code	Features	Suitable for	For machine model
1	**1341305**	RL30/1E/2C/8 230/240V	VICTORIA ARDUINO 09000015	ATHENALEVA - VENUSBAR

REGOLATORI DI LIVELLO VISACREM
LEVEL REGULATORS VISACREM
NIVEAUREGLER VISACREM
REGULADORES DE NIVEL VISACREM

1

Photo	LF Code	Features	Suitable for	For machine model
1	**1341200**	230V 50/60Hz 5A	VISACREM 08261307	NERA - PALANCA

REGOLATORI DI LIVELLO WEGA
LEVEL REGULATORS WEGA
NIVEAUREGLER WEGA
REGULADORES DE NIVEL WEGA

1

2

3

4

5

Photo	LF Code	Features	Suitable for	For machine model
1	**1341311**	RL/1E/2C/F 230/240V	WEGA WY18080001	ALE - EMA
1	**1341603**	RL/1E/2C/F 115V	WEGA WY18081001	ALE - EMA
2	**1054571**	RL01E/1S/4C/F 240V	WEGA WY18045	MININOVA
3	**1341304**	RL30/1E/2C/11 230V	WEGA	OLD MODELS - MODELLI VECCHI
4	**1341308**	RL40/1E/11 230/240V	WEGA WY18402	OLD MODELS - MODELLI VECCHI
5	**1341307**	RL40/1E/11 24V	WEGA	OLD MODELS - MODELLI VECCHI

Barista Tools

Quality products
for coffee specialists

RESISTENZE ASTORIA/CMA
HEATING ELEMENTS ASTORIA/CMA
HEIZKÖRPER ASTORIA/CMA
RESISTENCIAS ASTORIA/CMA

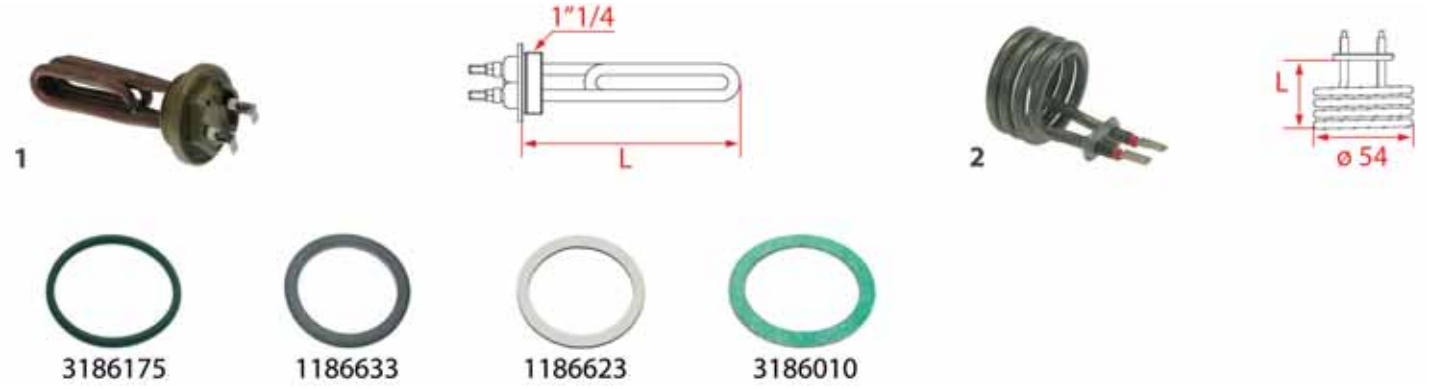

Photo	LF Code	Watt - Volt	L (mm)	Groups	Suitable for	For machine model
1	**1755257**	1000/1090W 230/240V	105	1-2-3-4	ASTORIA/CMA 17201002	PLUS4YOU
1	**1755603**	1300W 230V	105	1	ASTORIA/CMA 17201	CK - CKE - CKX - CKXE
1	**1755607**	1200W 110V	100	1	ASTORIA/CMA 17200	CK - CKE - CKX - CKXE
2	**1755614**	800W 230V	50	1	ASTORIA/CMA 17301	PRIMA

RESISTENZE ASTORIA/CMA
HEATING ELEMENTS ASTORIA/CMA
HEIZKÖRPER ASTORIA/CMA
RESISTENCIAS ASTORIA/CMA

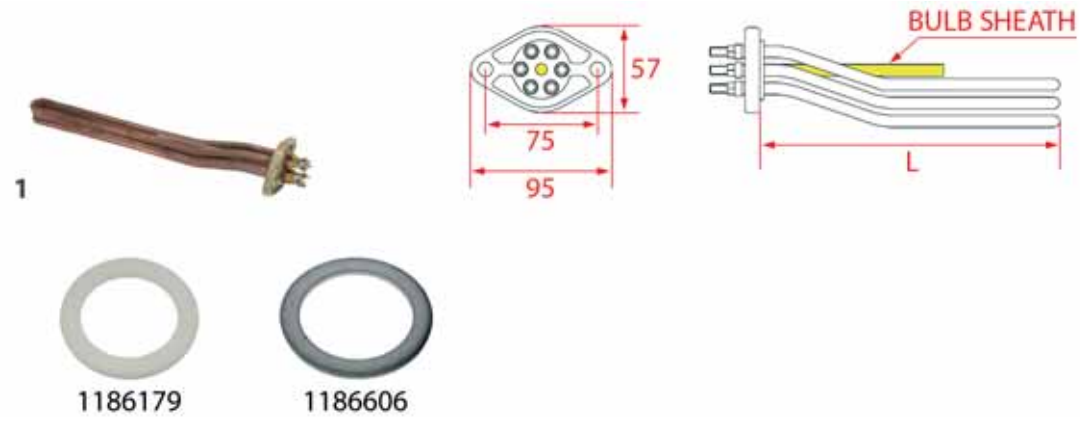

Photo	LF Code	Watt - Volt	L (mm)	Groups	Bulb sheath	Suitable for	For machine model
1	**1755065**	2000/2177W 230/240V	180	1	YES	ASTORIA/CMA 17006	ARGENTA - BRAVA - CALYPSO - DENISE - DIVINA - DORA
1	**1755608**	2700/2940W 230/240V	180	1	YES	ASTORIA/CMA 17012	GLORIA R12 - RAPALLO AL - SIBILLA - TANYA
1	**1755273**	2700W 120V	170	1	NO	ASTORIA/CMA 17016	TANYA
1	**1755615**	2600/2831W 230/240V	315	2	YES	ASTORIA/CMA 17054	ARGENTA - BRAVA - CALYPSO - DENISE - DIVINA - DORA
1	**1755215**	3000/3266W 230/240V	315	2	YES	ASTORIA/CMA 17058	ARGENTA - BRAVA - CALYPSO - DENISE - DIVINA - DORA
1	**1755258**	3400/3700W 230/240V	320	2	YES	ASTORIA/CMA 17059	ARGENTA - BRAVA - CALYPSO - DENISE - DIVINA - DORA
1	**1755070**	4000W 230/240V	310	2	YES	ASTORIA/CMA 17057	ARGENTA - BRAVA - CALYPSO - DENISE - DIVINA - DORA
1	**1755072**	3700/4029W 230/240V	450	3	YES	ASTORIA/CMA 17104	ARGENTA - BRAVA - CALYPSO - DENISE - DIVINA - DORA
1	**1755259**	5000/5440W 230/240V	575	3	YES	ASTORIA/CMA 17107	ARGENTA - BRAVA - CALYPSO - DENISE - DIVINA - DORA
1	**1755245**	6000W 220V	780	4	YES	ASTORIA/CMA 17153	ARGENTA - BRAVA - DENISE - DORA - GLORIA - GLORIA R12

RESISTENZE ASTORIA/CMA
HEATING ELEMENTS ASTORIA/CMA
HEIZKÖRPER ASTORIA/CMA
RESISTENCIAS ASTORIA/CMA

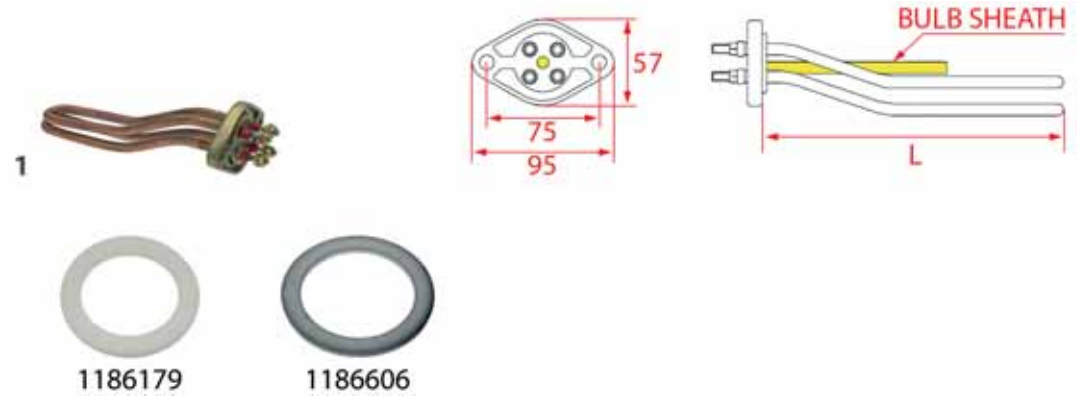

Photo	LF Code	Watt - Volt	L (mm)	Groups	Bulb sheath	Suitable for	For machine model
1	**1755604**	2000W 230/240V	175	1	YES	ASTORIA/CMA 17002	ARGENTA - BRAVA - CALYPSO - DENISE - DIVINA - DORA
1	**1755601**	2000W 120V	175	1	YES	ASTORIA/CMA 17001	ARGENTA - BRAVA - CALYPSO - DENISE - DIVINA - DORA
1	**1755602**	1700W 110V	180	1	YES	ASTORIA/CMA 17000	ARGENTA - BRAVA - CALYPSO - DENISE - DIVINA - DORA
1	**1755067**	2600W 230/240V	300	2	YES	ASTORIA/CMA 17051	ARGENTA - BRAVA - CALYPSO - DENISE - DIVINA - DORA
1	**1755605**	2600W 110V	320	2	YES	ASTORIA/CMA 17050	ARGENTA - BRAVA - CALYPSO - DENISE - DIVINA - DORA
1	**1755068**	3700W 230/240V	500	3	YES	ASTORIA/CMA 17101	ARGENTA - BRAVA - DENISE - DORA - GLORIA - LISA - PRATIC
1	**1755071**	5000W 230/240V	500	3	YES	ASTORIA/CMA 17106	ARGENTA - BRAVA - DENISE - DORA - GLORIA - LISA
1	**1755606**	3700W 110V	580	3	NO	ASTORIA/CMA 17100	ARGENTA - BRAVA - CALYPSO - DENISE - DIVINA - DORA
1	**1755073**	7000W 230/240V	770	4	YES	ASTORIA/CMA 17152	ARGENTA - BRAVA - DENISE - DORA - GLORIA - LISA - PRATIC

RESISTENZE ASTORIA/CMA
HEATING ELEMENTS ASTORIA/CMA
HEIZKÖRPER ASTORIA/CMA
RESISTENCIAS ASTORIA/CMA

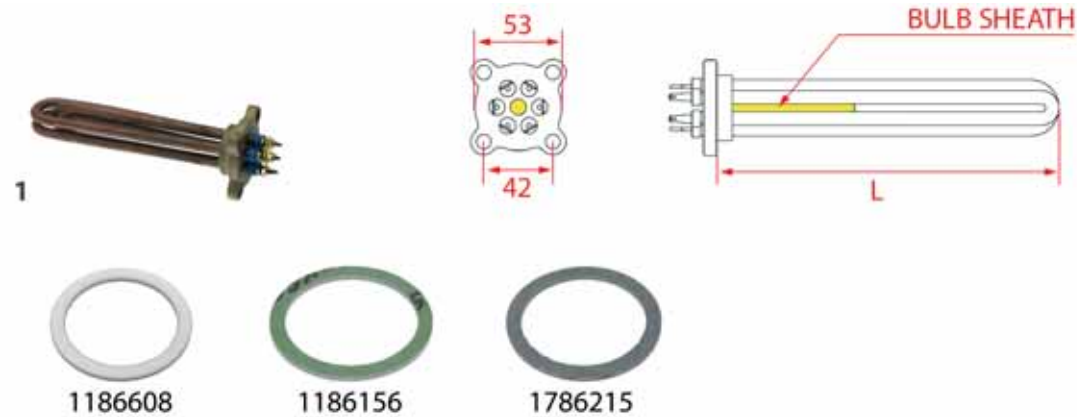

Photo	LF Code	Watt - Volt	L (mm)	Groups	Bulb sheath	Suitable for	For machine model
1	**1755254**	2350W 240V	175	1	YES	ASTORIA/CMA 17007	BOOSTED
1	**1755610**	6000W 240V	340	2	YES	ASTORIA/CMA 17052	BOOSTED
1	**1755609**	6000W 240V	565	3	YES	ASTORIA/CMA 17102	BOOSTED

RESISTENZE ASTORIA/CMA
HEATING ELEMENTS ASTORIA/CMA
HEIZKÖRPER ASTORIA/CMA
RESISTENCIAS ASTORIA/CMA

1

Photo	LF Code	Watt - Volt	Dimensions (mm)	Groups	Suitable for	For machine model
1	**1755255**	150W 120V	ø 6.5x50	1-2-3-4	ASTORIA/CMA 17508002	PLUS4YOU
1	**1755256**	150W 230V	ø 6.5x50	1-2-3-4	ASTORIA/CMA 17507001	PLUS4YOU

RESISTENZE AZKOYEN
HEATING ELEMENTS AZKOYEN
HEIZKÖRPER AZKOYEN
RESISTENCIAS AZKOYEN

1

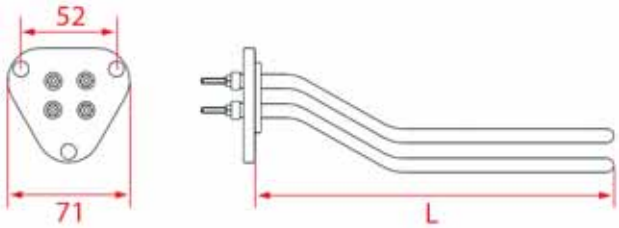

1786006

1186584

1186635

Photo	LF Code	Watt - Volt	L (mm)	Groups	Suitable for	For machine model
1	**1755036**	3000W 230V	360	2	AZKOYEN	AZ04 - BRAVO - VIENNA

RESISTENZE AZKOYEN
HEATING ELEMENTS AZKOYEN
HEIZKÖRPER AZKOYEN
RESISTENCIAS AZKOYEN

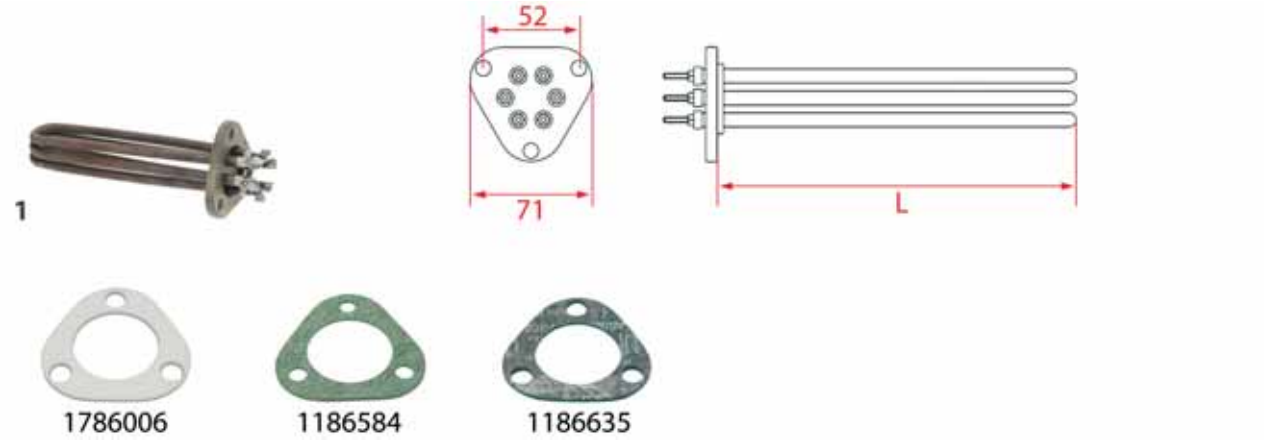

Photo	LF Code	Watt - Volt	L (mm)	Groups	Suitable for	For machine model
1	**1455009**	3600W 220V	255	2	AZKOYEN	AZ04 - BRAVO - VIENNA
1	**1755037**	4500W 230V	350	3	AZKOYEN	AZ04 - BRAVO - VIENNA

RESISTENZE BEZZERA
HEATING ELEMENTS BEZZERA
HEIZKÖRPER BEZZERA
RESISTENCIAS BEZZERA

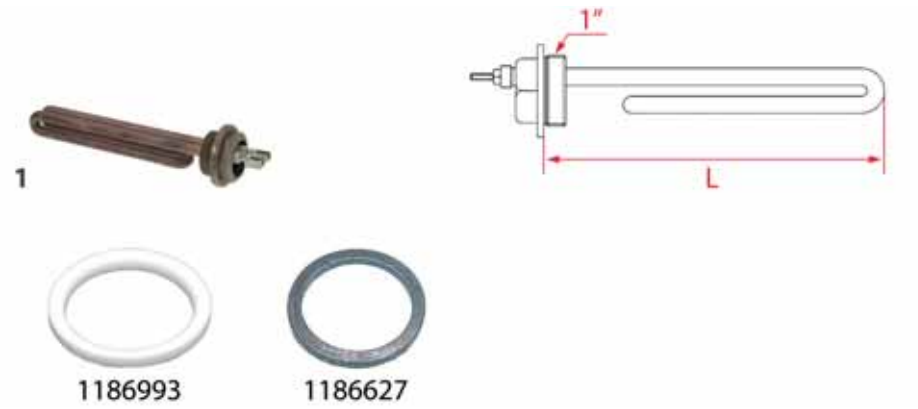

Photo	LF Code	Watt - Volt	L (mm)	Groups	Suitable for	For machine model
1	**1755623**	1250/1450W 220/240V	160	1	BEZZERA 5722240	GALATEA DOMUS - GIULIA - STREGA - PROEX - BZ35 - BZ40
1	**1755621**	1350W 110V	160	1	BEZZERA 5721127TP	GALATEA DOMUS - GIULIA - STREGA - PROEX - BZ35 - BZ40

RESISTENZE BEZZERA
HEATING ELEMENTS BEZZERA
HEIZKÖRPER BEZZERA
RESISTENCIAS BEZZERA

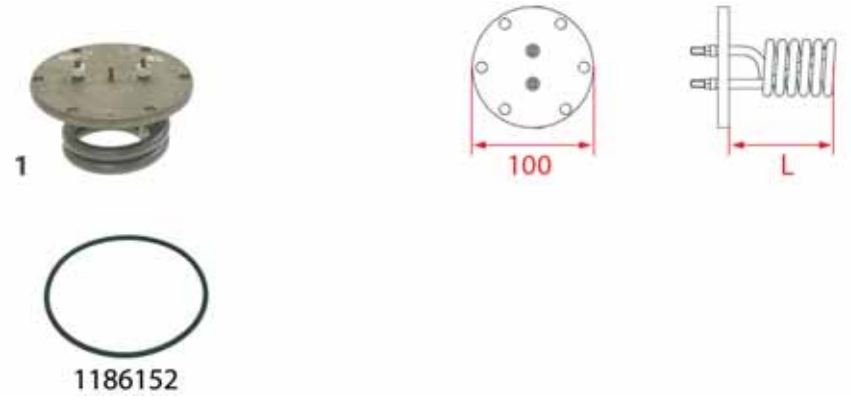

Photo	LF Code	Watt - Volt	L (mm)	Groups	Suitable for	For machine model
1	**1755624**	1100/1300W 220/240V	46	1	BEZZERA 5722239	BZ02 - BZ07 - BZ10 - BZ99

RESISTENZE BEZZERA
HEATING ELEMENTS BEZZERA
HEIZKÖRPER BEZZERA
RESISTENCIAS BEZZERA

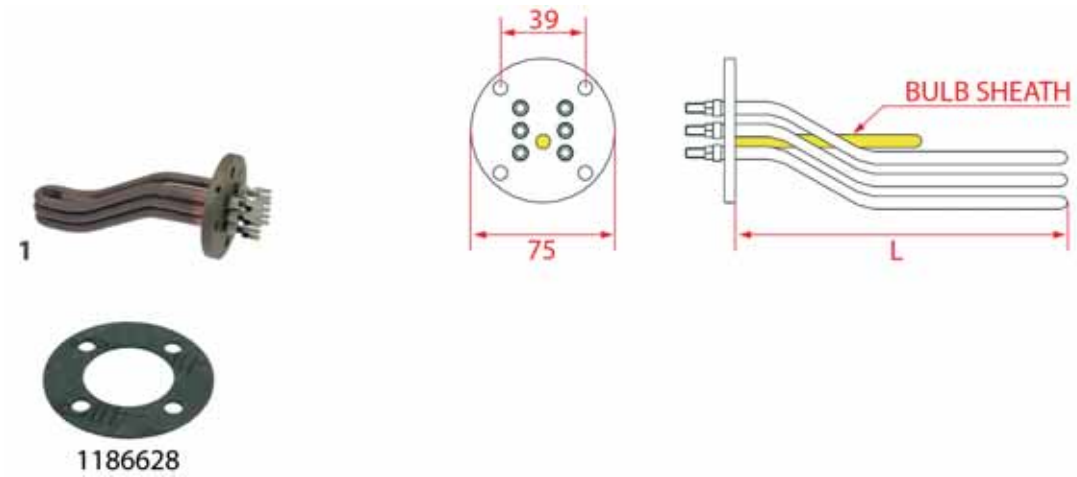

Photo	LF Code	Watt - Volt	L (mm)	Groups	Bulb sheath	Suitable for	For machine model
1	**1755223**	1850/2200W 220/240V	170	1	YES	BEZZERA 5722241R	B2006 - B2013 - B6000 - EBBIS

RESISTENZE BEZZERA
HEATING ELEMENTS BEZZERA
HEIZKÖRPER BEZZERA
RESISTENCIAS BEZZERA

1

1186628

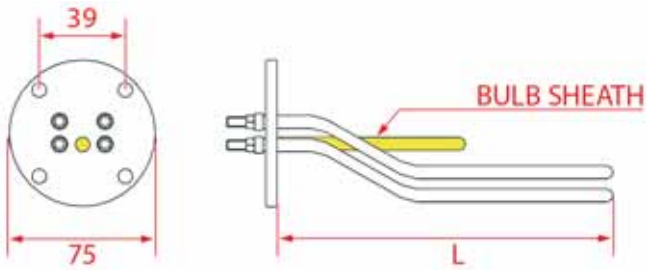

Photo	LF Code	Watt - Volt	L (mm)	Groups	Bulb sheath	Suitable for	For machine model
1	**1755224**	2750/3300W 220/240V	340	2	YES	BEZZERA 5722242	B2006 - B2013 - B6000 - EBBIS - GALATEA
1	**1755225**	3300/3800W 220/240V	350	2	YES	BEZZERA 5722423	B2000 - B2000 AL - B2006 - B2006 AL - B3000 - B4000
1	**1755620**	3500W 110V	345	2	NO	BEZZERA 5721116	B2000 - B2000 AL - B3000 - B4000 - ELLISSE - ELLISSE AL
1	**1755227**	4600/5400W 220/240V	550	3-4	YES	BEZZERA 5722243	B2000 - B2000 AL - B2006 - B2006 AL - B2013 - B3000

RESISTENZE BEZZERA
HEATING ELEMENTS BEZZERA
HEIZKÖRPER BEZZERA
RESISTENCIAS BEZZERA

1

Photo	LF Code	Watt - Volt	Dimensions (mm)	Groups	Suitable for	For machine model
1	**1755286**	50W 230V	ø 10x40	1-2-3-4	BEZZERA 5963101	B2009 - B2013

RESISTENZE BFC
HEATING ELEMENTS BFC
HEIZKÖRPER BFC
RESISTENCIAS BFC

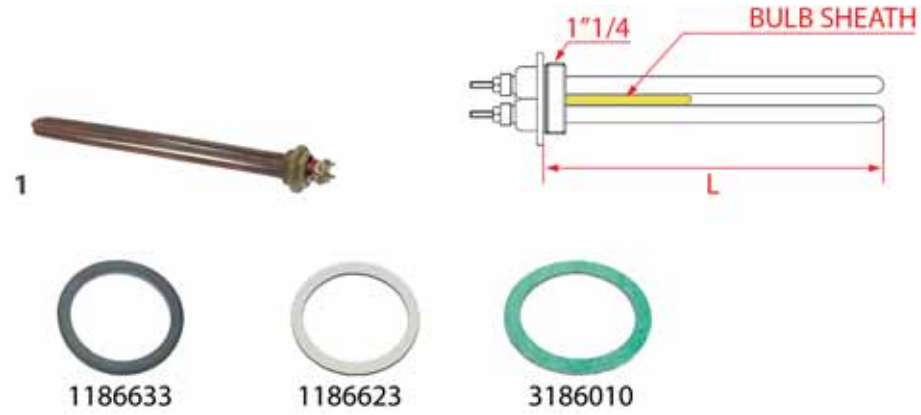

Photo	LF Code	Watt - Volt	L (mm)	Groups	Bulb sheath	Suitable for	For machine model
1	**1755208**	3300W 230V	370	2	YES	BFC 5050220	GALILEO - GRANDOGE - LIRA
1	**1755209**	4000W 230V	495	3	YES	BFC 5050230	GALILEO - GRANDOGE - LIRA

RESISTENZE BFC
HEATING ELEMENTS BFC
HEIZKÖRPER BFC
RESISTENCIAS BFC

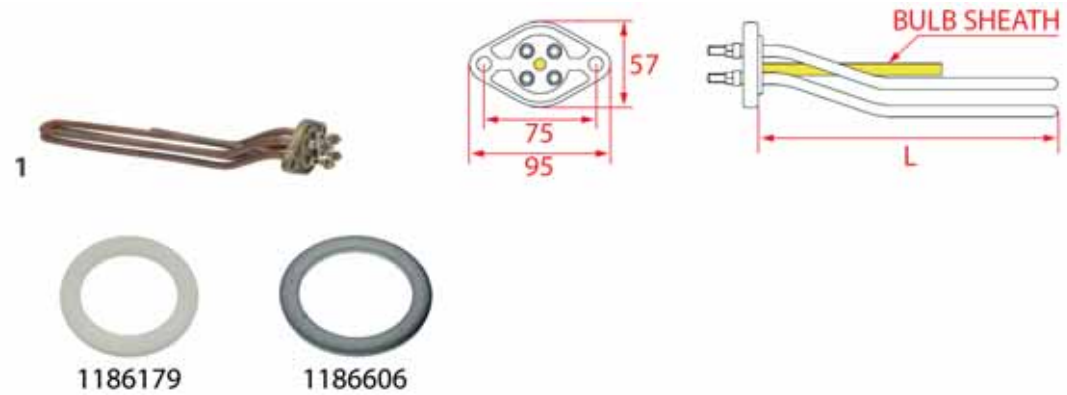

Photo	LF Code	Watt - Volt	L (mm)	Groups	Bulb sheath	Suitable for	For machine model
1	**1755210**	3500W 230V	340	2	YES	BFC 5050720	DELUX - GALILEO - IMOLA - LAVITTORIA - LIRA - MARANELLO
1	**1755211**	5200W 230V	510	3	YES	BFC 5050730	DELUX - GALILEO - IMOLA - LAVITTORIA - LIRA - MARANELLO

RESISTENZE BIANCHI
HEATING ELEMENTS BIANCHI
HEIZKÖRPER BIANCHI
RESISTENCIAS BIANCHI

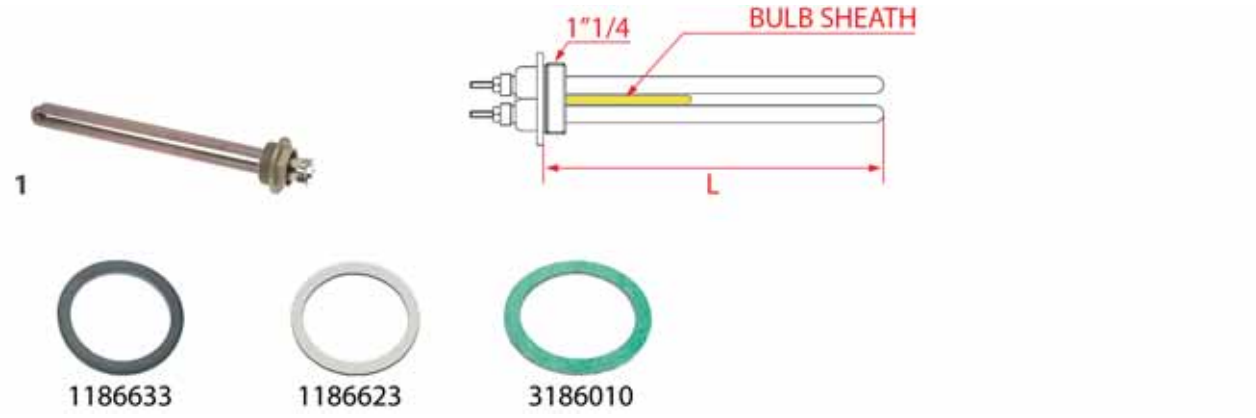

Photo	LF Code	Watt - Volt	L (mm)	Groups	Bulb sheath	Suitable for	For machine model
1	**1755272**	2800W 230V	285	2	NO	BIANCHI 29007611	SARA

RESISTENZE BIANCHI
HEATING ELEMENTS BIANCHI
HEIZKÖRPER BIANCHI
RESISTENCIAS BIANCHI

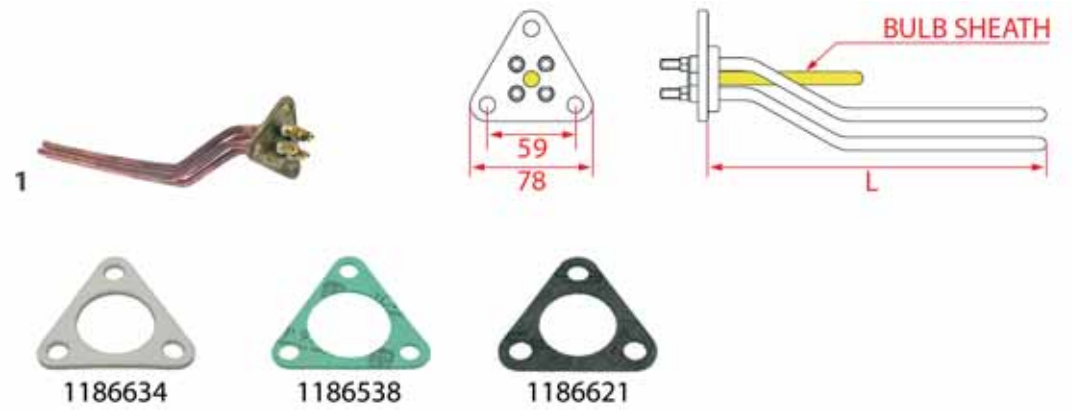

Photo	LF Code	Watt - Volt	L (mm)	Groups	Bulb sheath	Suitable for	For machine model
1	**1755331**	3000W 230V	335	2	NO	BIANCHI 29007021-01	LUCIA - SOFIA
1	**1755632**	3000W 110V	350	2	NO	BIANCHI	LUCIA - SOFIA

RESISTENZE BRASILIA
HEATING ELEMENTS BRASILIA
HEIZKÖRPER BRASILIA
RESISTENCIAS BRASILIA

Photo	LF Code	Watt - Volt	L (mm)	Groups	Suitable for	For machine model
1	**1755340**	1200W 220V	68	1	BRASILIA 00625.2.00.08	CLUB - LADY
1	**1755638**	1200W 110V	68	1	BRASILIA 00626.2.00.08	CLUB - LADY

RESISTENZE BRASILIA
HEATING ELEMENTS BRASILIA
HEIZKÖRPER BRASILIA
RESISTENCIAS BRASILIA

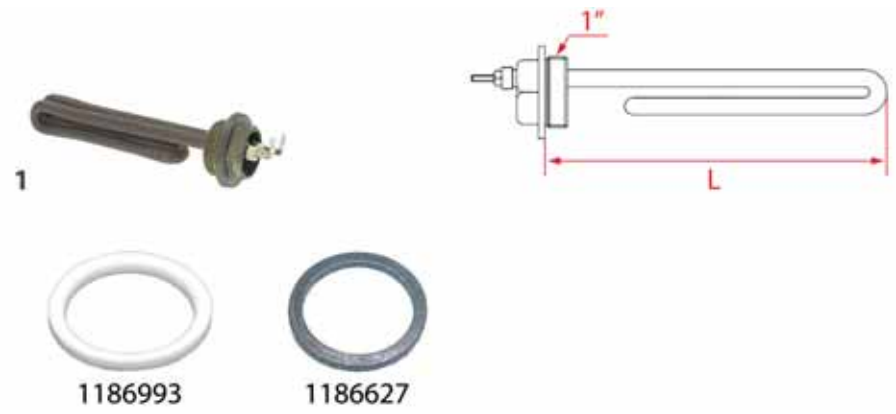

Photo	LF Code	Watt - Volt	L (mm)	Groups	Suitable for	For machine model
1	**1755348**	1350W 220V	130	1	BRASILIA 01911.2.00.08	CAPPUCCINO
1	**1755637**	1400W 110V	135	1	BRASILIA 01912.2.00.08	CAPPUCCINO

RESISTENZE BRASILIA
HEATING ELEMENTS BRASILIA
HEIZKÖRPER BRASILIA
RESISTENCIAS BRASILIA

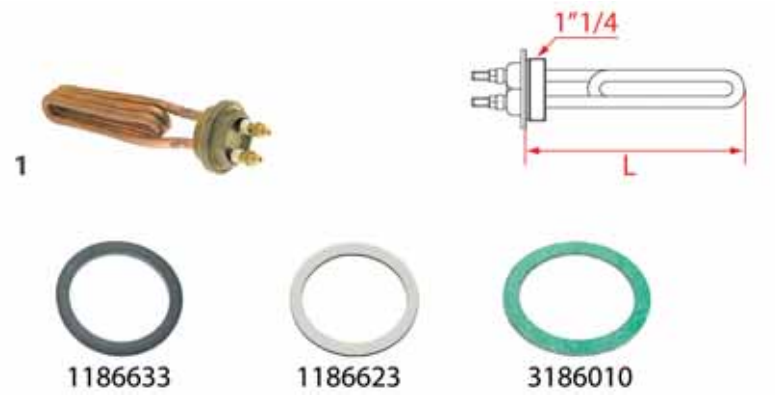

Photo	LF Code	Watt - Volt	L (mm)	Groups	Suitable for	For machine model
1	**1755336**	1800W 230V	170	1	BRASILIA 00613.2.00.08	CENTURY - GRADISCA - PORTOFINO
1	**1755633**	1800W 110V	170	1	BRASILIA 00619.2.00.08	CENTURY - GRADISCA - PORTOFINO

RESISTENZE BRASILIA
HEATING ELEMENTS BRASILIA
HEIZKÖRPER BRASILIA
RESISTENCIAS BRASILIA

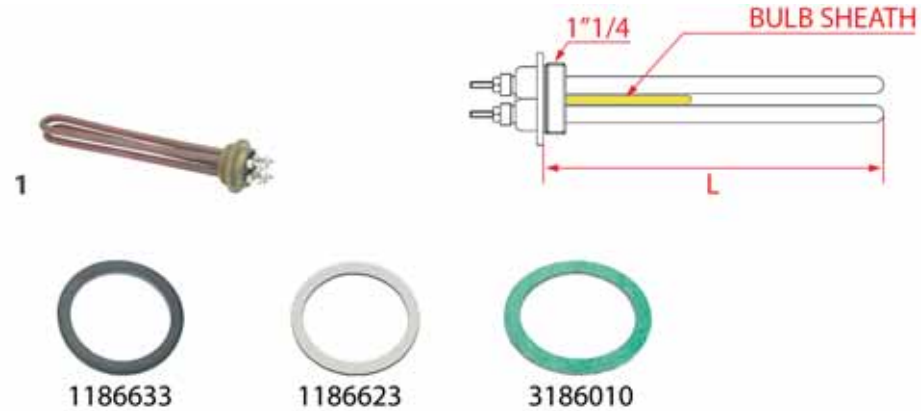

Photo	LF Code	Watt - Volt	L (mm)	Groups	Bulb sheath	Suitable for	For machine model
1	**1755134**	2400W 230V	240	2	NO	BRASILIA 00627.2.00.08	AMERICA
1	**1755634**	2400W 110V	295	2	NO	BRASILIA 00628.2.00.08	AMERICA

RESISTENZE BRASILIA
HEATING ELEMENTS BRASILIA
HEIZKÖRPER BRASILIA
RESISTENCIAS BRASILIA

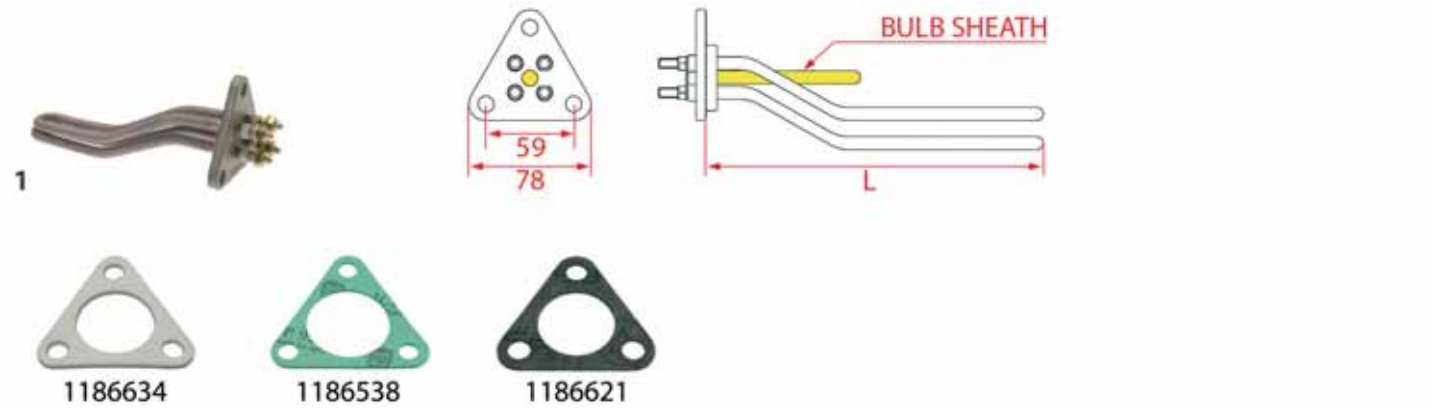

Photo	LF Code	Watt - Volt	L (mm)	Groups	Bulb sheath	Suitable for	For machine model
1	**1755330**	1800W 230V	170	1	NO	BRASILIA 00614.2.00.08	CENTURY - FIRENZE - FIRENZE SL - PORTOFINO
1	**1755331**	3000W 230V	335	2	NO	BRASILIA 00615.2.00.08	CENTURY - CLASSICA - DECURTIS - FIRENZE - FIRENZE SL
1	**1755632**	3000W 115V	335	2	NO	BRASILIA 00621.2.00.08	CENTURY - CLASSICA - DECURTIS - FIRENZE - FIRENZE SL
1	**1755002**	3500W 230V	350	2	NO	BRASILIA 01834.2.00.08	CADETTA - CENTURY - DECURTIS - EXCELSIOR - GRADISCA
1	**1755332**	4000W 230V	490	3	NO	BRASILIA 00616.2.00.08	CENTURY - DECURTIS - FIRENZE - FIRENZE SL - PORTOFINO
1	**1755003**	5000W 230V	450	3	NO	BRASILIA 01835.2.00.08	CADETTA - CENTURY - DECURTIS - EXCELSIOR - GRADISCA
1	**1755333**	5000W 230V	650	3-4	NO	BRASILIA 00617.2.00.08	CENTURY - FIRENZE - PORTOFINO - PORTOFINO AL - 100 - 105
1	**1755337**	3000W 380V	350	3	NO	BRASILIA 01862.2.00.08	CENTURY - PORTOFINO
1	**1755338**	4000W 380V	460	3	NO	BRASILIA 01863.2.00.08	CENTURY - PORTOFINO

RESISTENZE BRASILIA
HEATING ELEMENTS BRASILIA
HEIZKÖRPER BRASILIA
RESISTENCIAS BRASILIA

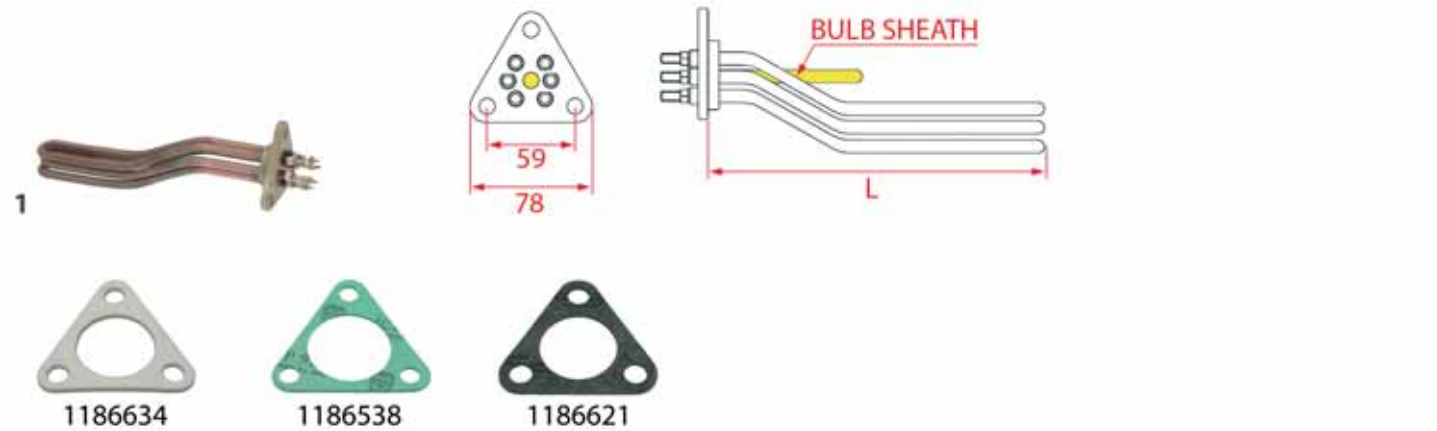

Photo	LF Code	Watt - Volt	L (mm)	Groups	Bulb sheath	Suitable for	For machine model
1	**1755217**	4500W 230/380V	335	2	NO	BRASILIA 04580.2.00.08	CENTURY - DECURTIS - GRADISCA - PORTOFINO - ROMA - 205

RESISTENZE BRUGNETTI/AURORA
HEATING ELEMENTS BRUGNETTI/AURORA
HEIZKÖRPER BRUGNETTI/AURORA
RESISTENCIAS BRUGNETTI/AURORA

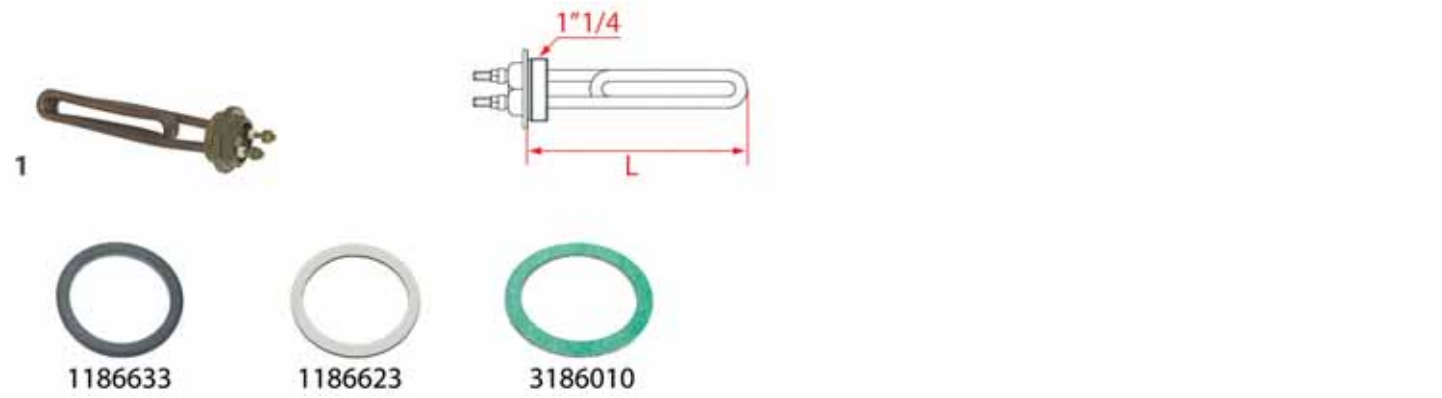

Photo	LF Code	Watt - Volt	L (mm)	Groups	Suitable for	For machine model
1	**1755026**	2000W 230V	175	1	BRUGNETTI/AURORA 000303	OLD MODELS - MODELLI VECCHI

RESISTENZE BRUGNETTI/AURORA
HEATING ELEMENTS BRUGNETTI/AURORA
HEIZKÖRPER BRUGNETTI/AURORA
RESISTENCIAS BRUGNETTI/AURORA

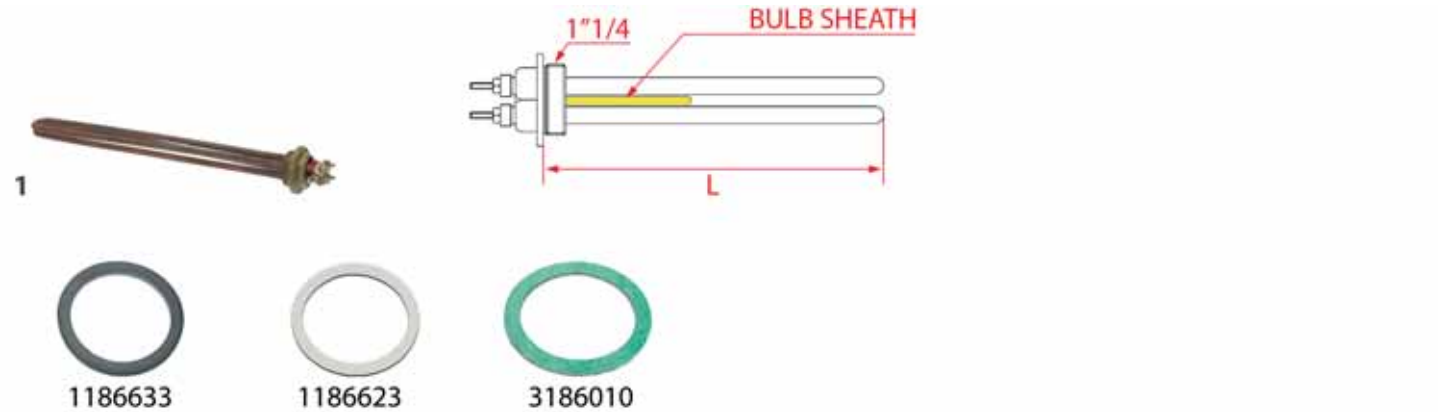

Photo	LF Code	Watt - Volt	L (mm)	Groups	Bulb sheath	Suitable for	For machine model
1	**1755134**	2400W 230V	240	2	NO	BRUGNETTI/AURORA 000304	OLD MODELS - MODELLI VECCHI

RESISTENZE BRUGNETTI/AURORA
HEATING ELEMENTS BRUGNETTI/AURORA
HEIZKÖRPER BRUGNETTI/AURORA
RESISTENCIAS BRUGNETTI/AURORA

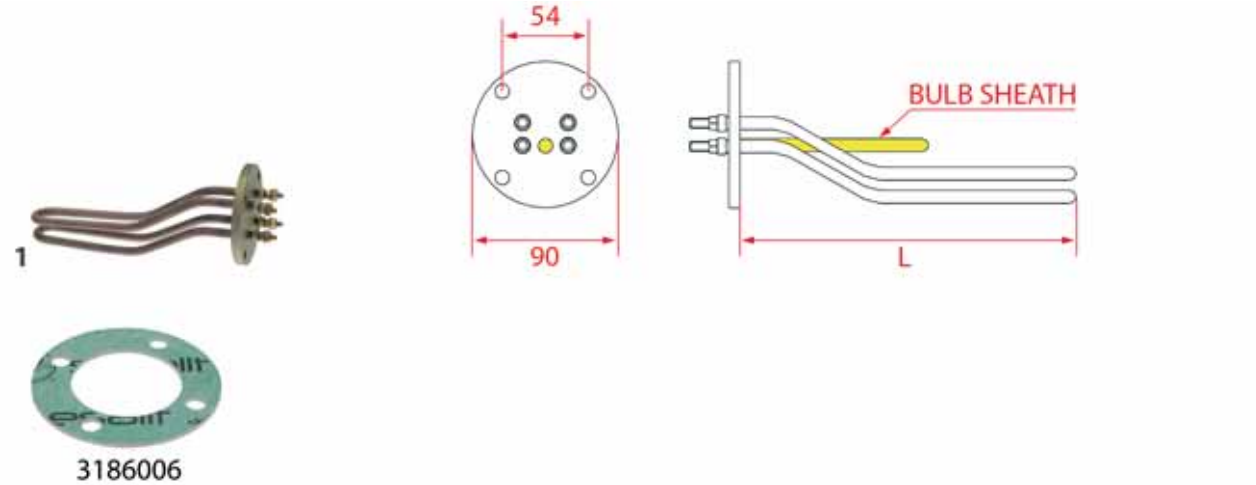

Photo	LF Code	Watt - Volt	L (mm)	Groups	Bulb sheath	Suitable for	For machine model
1	**1755622**	2000W 220V	230	1	NO	BRUGNETTI/AURORA 000644	OLD MODELS - MODELLI VECCHI

RESISTENZE BRUGNETTI/AURORA
HEATING ELEMENTS BRUGNETTI/AURORA
HEIZKÖRPER BRUGNETTI/AURORA
RESISTENCIAS BRUGNETTI/AURORA

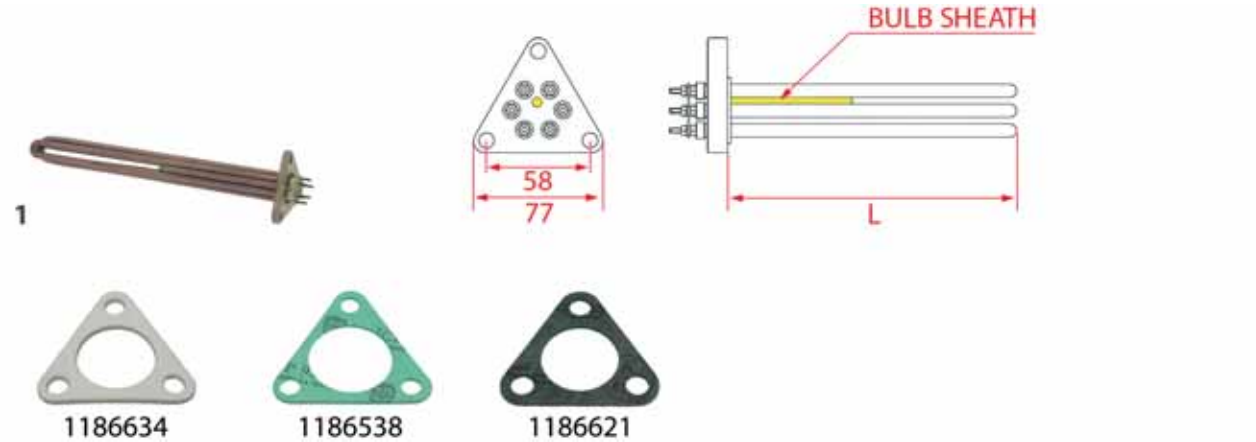

Photo	LF Code	Watt - Volt	L (mm)	Groups	Bulb sheath	Suitable for	For machine model
1	**5032257**	3000W 230/400V	305	2	YES	BRUGNETTI/AURORA 000645.F	ALEXIA - C

RESISTENZE CARIMALI
HEATING ELEMENTS CARIMALI
HEIZKÖRPER CARIMALI
RESISTENCIAS CARIMALI

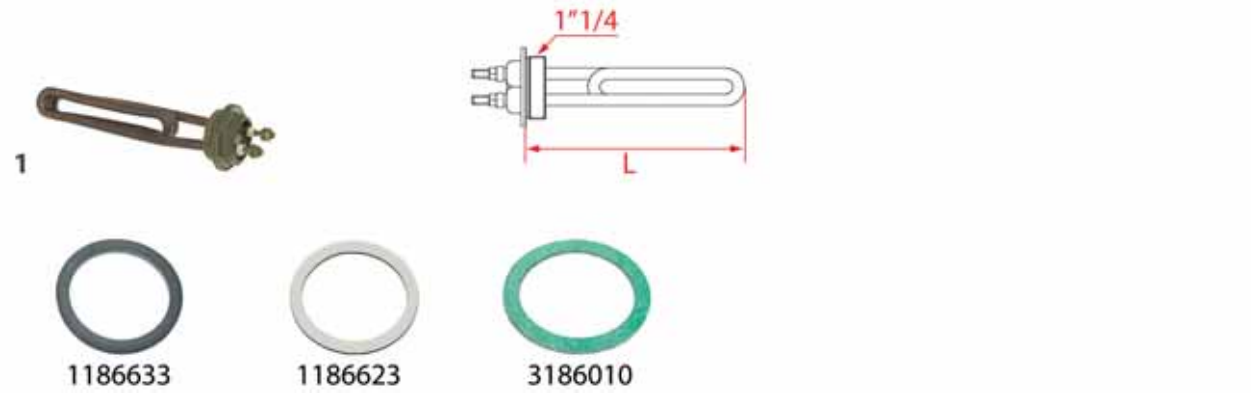

Photo	LF Code	Watt - Volt	L (mm)	Groups	Suitable for	For machine model
1	**1755026**	2000W 230V	175	1	CARIMALI 95.00985	AROMA

RESISTENZE CARIMALI
HEATING ELEMENTS CARIMALI
HEIZKÖRPER CARIMALI
RESISTENCIAS CARIMALI

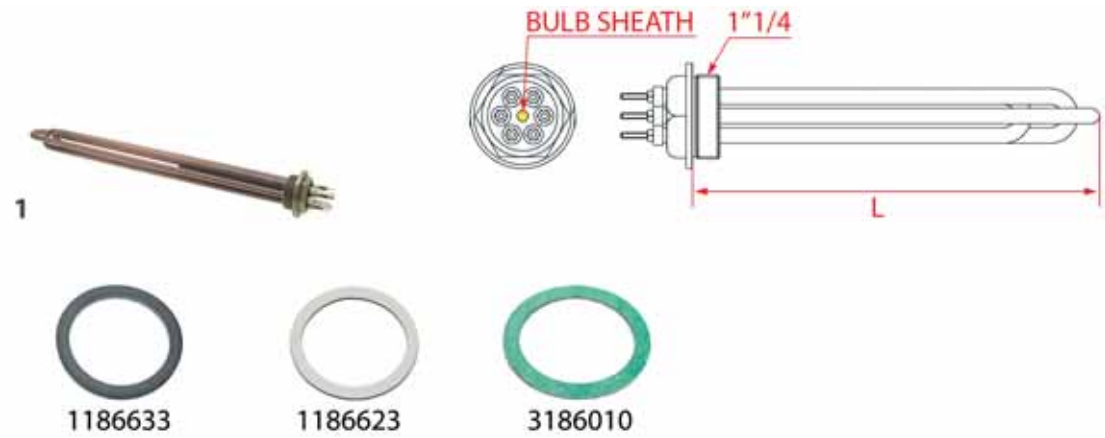

Photo	LF Code	Watt - Volt	L (mm)	Groups	Bulb sheath	Suitable for	For machine model
1	**1755061**	3000W 230/400V	390	2	YES	CARIMALI 95.00227	AROMA
1	**1755063**	5000W 230/400V	625	3	YES	CARIMALI 95.01202	AROMA

RESISTENZE CARIMALI
HEATING ELEMENTS CARIMALI
HEIZKÖRPER CARIMALI
RESISTENCIAS CARIMALI

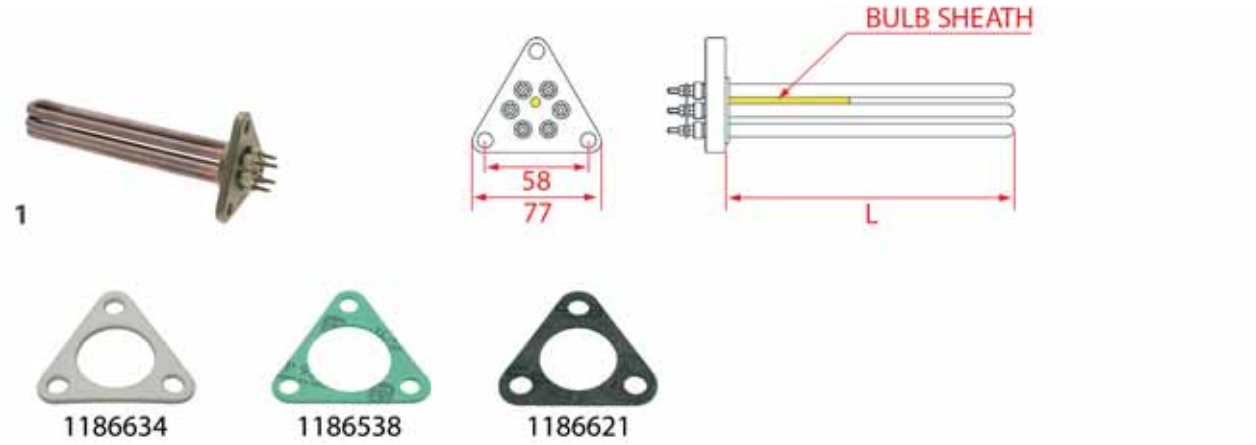

Photo	LF Code	Watt - Volt	L (mm)	Groups	Bulb sheath	Suitable for	For machine model
1	**5047695**	2800W 230/400V	190	1	YES	CARIMALI 96.00482	ETABETAV2 - E9 ESPRESSO - KIKKO - KIKKO2 - TEMA STYLE
1	**1755295**	2800W 230/400V	335	2	YES	CARIMALI 96.05100	PRATICA
1	**7101443**	3500W 230/400V	380	2	YES	CARIMALI 96.00496	ETABETAV2 - E9 ESPRESSO - KIKKO - KIKKO2 - TEMA STYLE
1	**5039682**	4500W 230/400V	380	2	YES	CARIMALI 96.00505	ETABETAV2 - E9 ESPRESSO - KIKKO - KIKKO2 - TEMA STYLE
1	**1755289**	4500W 230/400V	635	3	YES	CARIMALI 96.00495	ETABETAV2 - E9 ESPRESSO - KIKKO - KIKKO2 - TEMA STYLE

RESISTENZE CASADIO
HEATING ELEMENTS CASADIO
HEIZKÖRPER CASADIO
RESISTENCIAS CASADIO

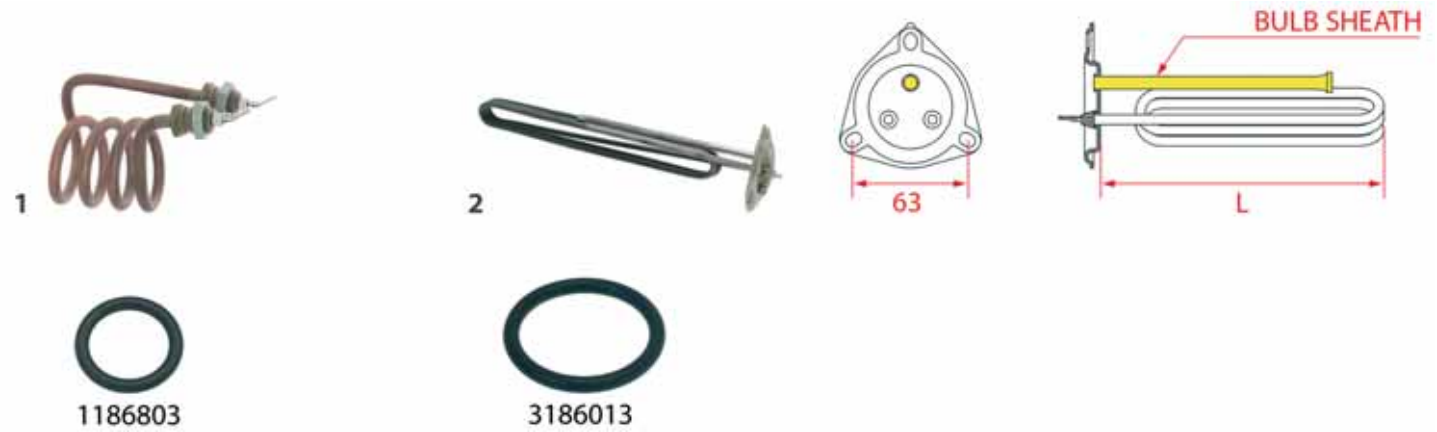

Photo	LF Code	Watt - Volt	L (mm)	Groups	Bulb sheath	Suitable for	For machine model
1	**1755237**	1550/1300W 220/240V	80	1-2-3-4	NO	CASADIO 958061010	VENTI
2	**1755234**	2700W 230V	346	2	YES	CASADIO 958082030	VENTI

RESISTENZE CASADIO
HEATING ELEMENTS CASADIO
HEIZKÖRPER CASADIO
RESISTENCIAS CASADIO

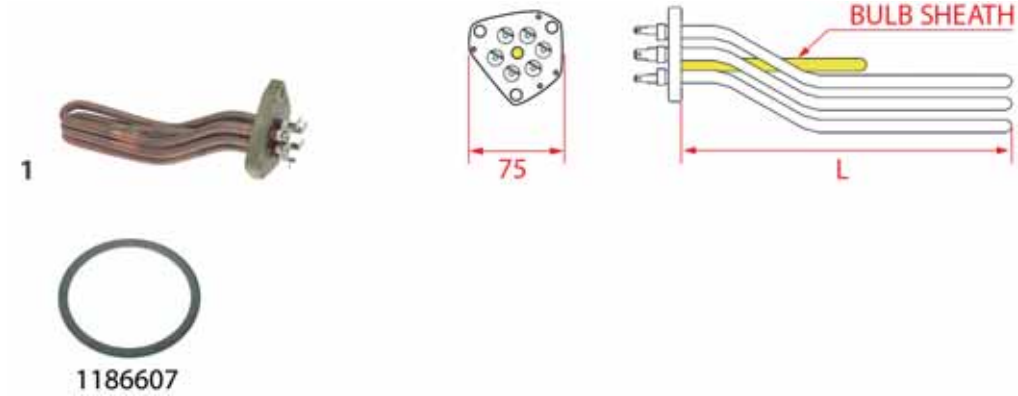

Photo	LF Code	Watt - Volt	L (mm)	Groups	Bulb sheath	Suitable for	For machine model
1	**1755236**	2700W 220V	190	1-2	YES	CASADIO 923522020	DIECIA - DIECIS
1	**1755235**	5400/6430W 220/400V	390	2	YES	CASADIO 923523010	DIECIA - DIECIS

RESISTENZE CASADIO
HEATING ELEMENTS CASADIO
HEIZKÖRPER CASADIO
RESISTENCIAS CASADIO

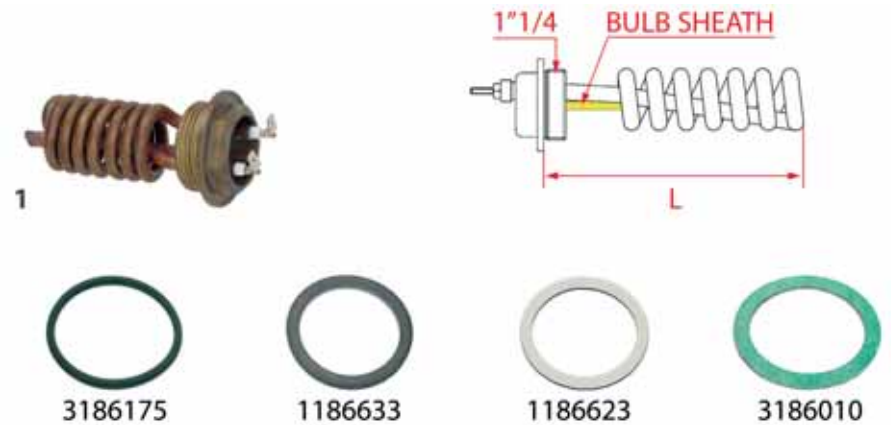

Photo	LF Code	Watt - Volt	L (mm)	Groups	Bulb sheath	Suitable for	For machine model
1	**1755301**	1400W 230V	100	1	YES	CASADIO 988050010	DAFNE

RESISTENZE CIMBALI
HEATING ELEMENTS CIMBALI
HEIZKÖRPER CIMBALI
RESISTENCIAS CIMBALI

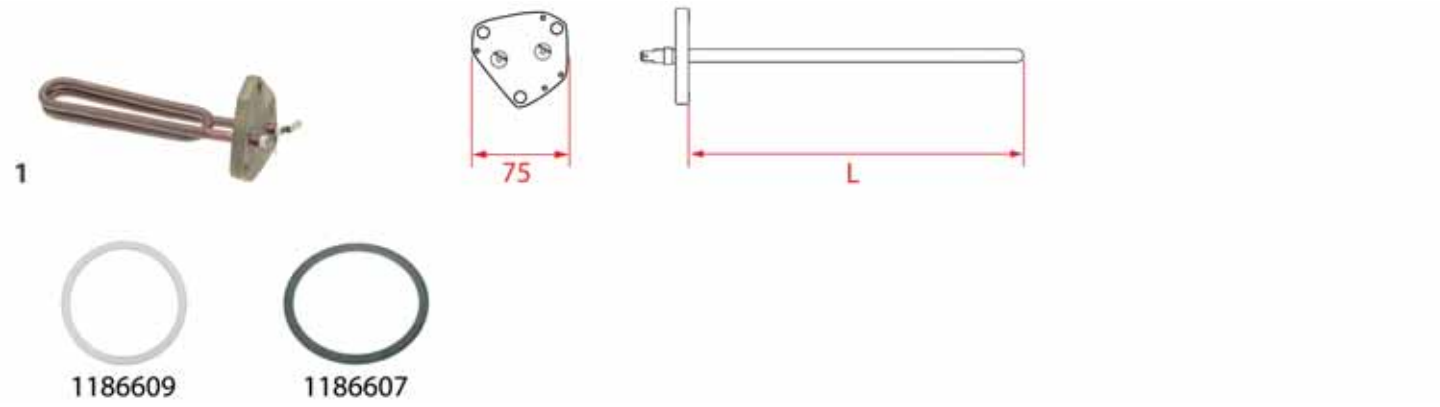

Photo	LF Code	Watt - Volt	L (mm)	Groups	Bulb sheath	Suitable for	For machine model
1	**1755082**	1300W 220V	180	1	NO	CIMBALI 442-766-000	JUNIOR - JUNIORD - JUNIORS
1	**1755646**	1300W 110V	180	1	NO	CIMBALI 442-767-000	JUNIOR - JUNIORD - JUNIORS

RESISTENZE CIMBALI
HEATING ELEMENTS CIMBALI
HEIZKÖRPER CIMBALI
RESISTENCIAS CIMBALI

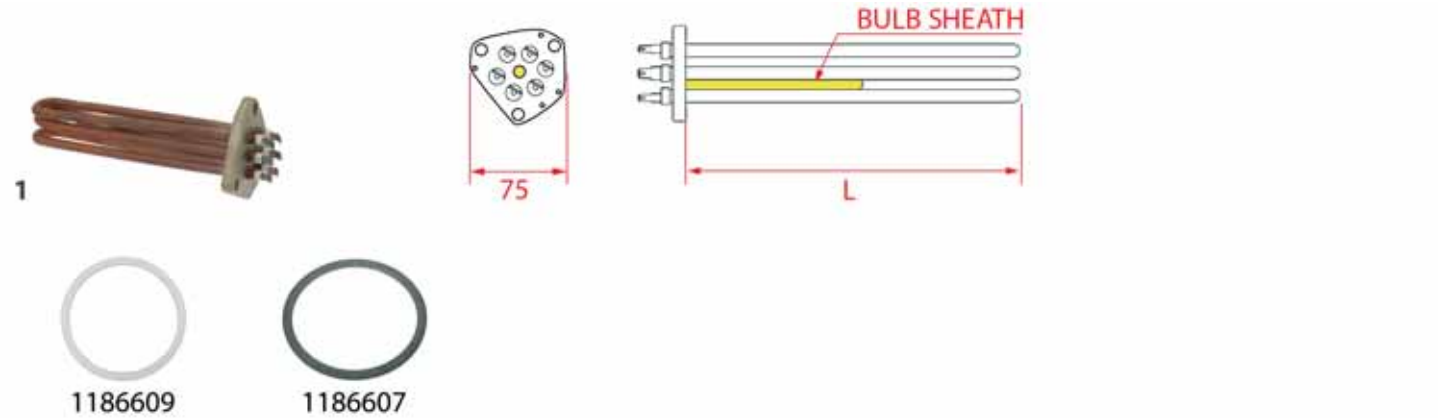

Photo	LF Code	Watt - Volt	L (mm)	Groups	Bulb sheath	Suitable for	For machine model
1	**1755083**	1800W 220V	180	1	YES	CIMBALI 537-013-700	M20 - M21JUNIOR - M25 - M30 - M30BISTRO
1	**1755647**	1800W 110V	170	1	YES	CIMBALI 537-013-600	M20 - M21JUNIOR - M25 - M30 - M30BISTRO
1	**1755009**	2050/2440W 220/240V	185	1	YES	CIMBALI 421-562-030	M25 - M30
1	**1755205**	2950/3420W 220/400V	305	2	YES	CIMBALI 537-013-100	M24SELECT - M27 - M28COMPACT - M29COMPACT - M30
1	**1755088**	3750/4500W 220/240V	380	2	YES	CIMBALI 537-012-100	M20 - M24 - M30 - M39 - M39GT
1	**1755010**	4500/5370W 220/240V	375	2-3	YES	CIMBALI 537-012-200	M25 - M27 - M28 - M30
1	**1755089**	5790W 220V	595	3	YES	CIMBALI 537-012-500	M20 - M24 - M30 - M39

RESISTENZE CIMBALI
HEATING ELEMENTS CIMBALI
HEIZKÖRPER CIMBALI
RESISTENCIAS CIMBALI

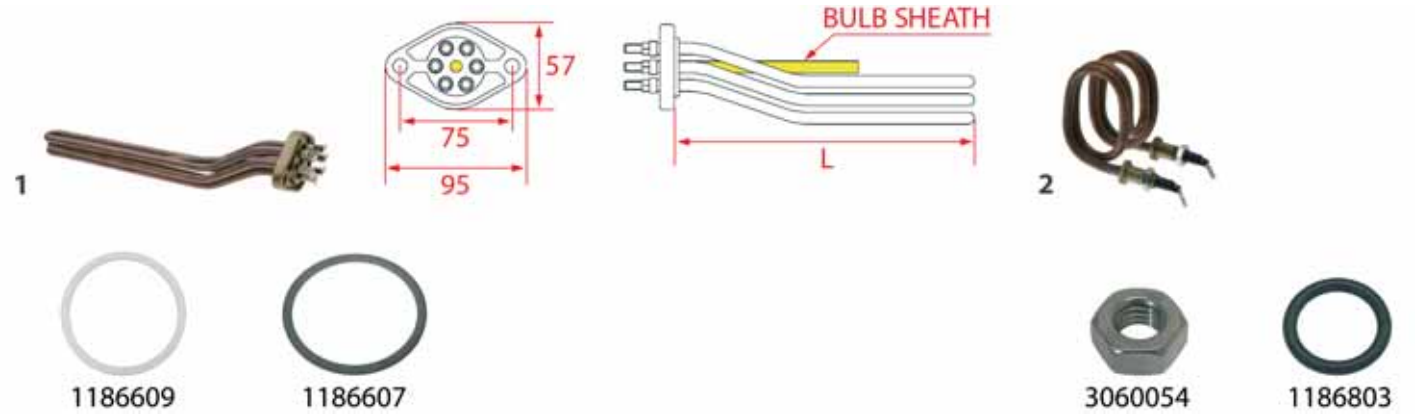

Photo	LF Code	Watt - Volt	L (mm)	Groups	Bulb sheath	Suitable for	For machine model
1	**1755117**	3780/4500W 230/400V	295	2	YES	CIMBALI 911-544-010	MALONGO - M27 2008
2	**1755262**	800/950W 220/240V	50	2-3-4	NO	CIMBALI 913-421-020	M39GT

RESISTENZE CIMBALI
HEATING ELEMENTS CIMBALI
HEIZKÖRPER CIMBALI
RESISTENCIAS CIMBALI

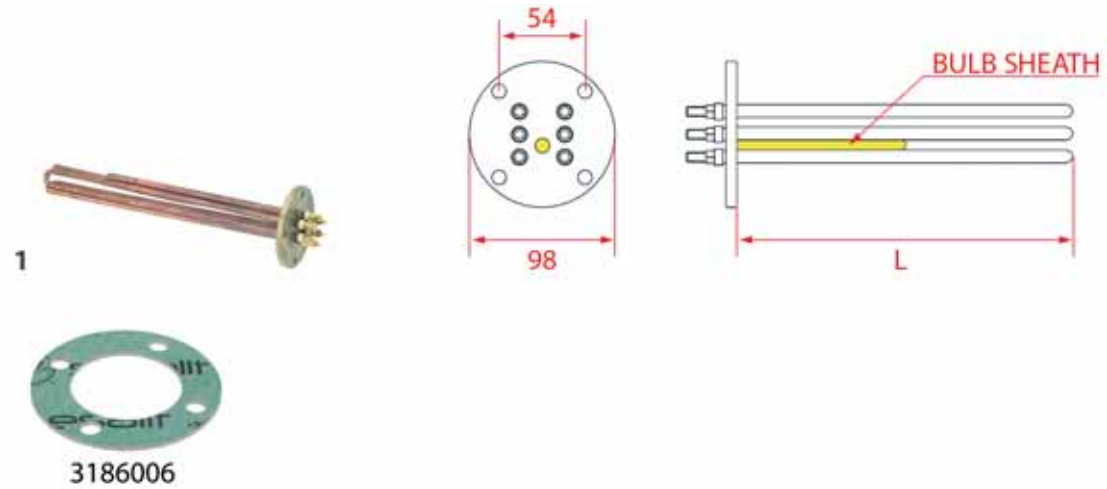

Photo	LF Code	Watt - Volt	L (mm)	Groups	Bulb sheath	Suitable for	For machine model
1	**3355112**	2700W 220/380V	230	2	YES	CIMBALI	M15
1	**1755891**	5000W 220V	360	3	YES	CIMBALI	M15

RESISTENZE CONTI
HEATING ELEMENTS CONTI
HEIZKÖRPER CONTI
RESISTENCIAS CONTI

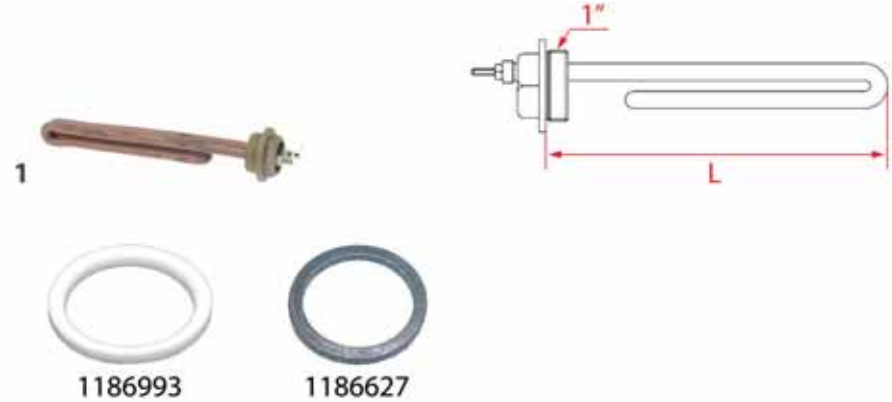

Photo	LF Code	Watt - Volt	L (mm)	Groups	Suitable for	For machine model
1	**1455014**	2500W 230V	200	2	CONTI 406919	CLUB
1	**1455013**	3400W 230V	535	2	CONTI 411431	CLUB
1	**1455047**	3600W 230V	330	2	CONTI 425030	---

RESISTENZE CONTI
HEATING ELEMENTS CONTI
HEIZKÖRPER CONTI
RESISTENCIAS CONTI

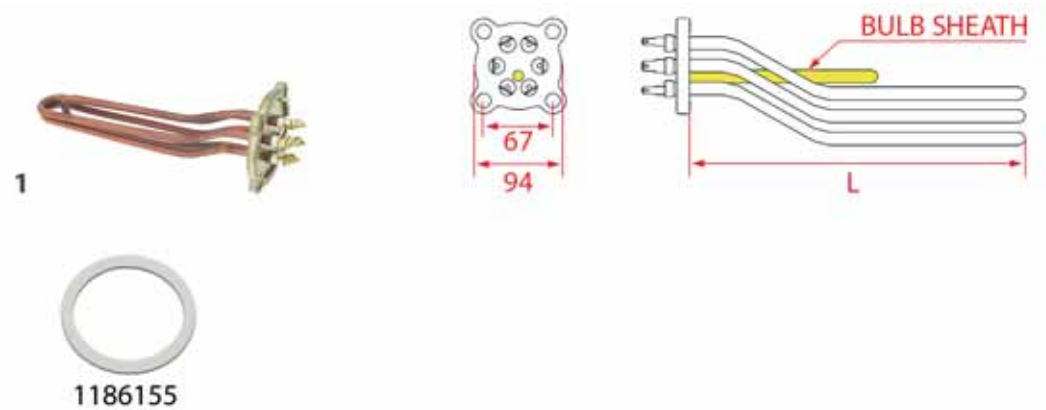

Photo	LF Code	Watt - Volt	L (mm)	Groups	Bulb sheath	Suitable for	For machine model
1	**1755391**	2800/3050W 230/240V	175	1	NO	CONTI	---
1	**1755392**	2800W 220/380V	230	2	NO	CONTI	---
1	**1755393**	4000/4350W 230/240V	430	3	NO	CONTI	---
1	**1755394**	6000W 220/380V	430	4	NO	CONTI	---

RESISTENZE DELONGHI
HEATING ELEMENTS DELONGHI
HEIZKÖRPER DELONGHI
RESISTENCIAS DELONGHI

1

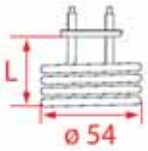

Photo	LF Code	Watt - Volt	L (mm)	Groups	Suitable for	For machine model
1	**1755274**	1000W 225V	55	1	DELONGHI 5513270609	ECOV310AZ - EC155 - EC300M

RESISTENZE DELONGHI
HEATING ELEMENTS DELONGHI
HEIZKÖRPER DELONGHI
RESISTENCIAS DELONGHI

1

Photo	LF Code	Watt - Volt	L (mm)	Groups	Suitable for	For machine model
1	**D355032**	1070W 230V	---	1	DELONGHI 7313224591	LATTISSIMA PLUS - LATTISSIMA PRO - LATTISSIMA TOUCH

RESISTENZE DIDIESSE
HEATING ELEMENTS DIDIESSE
HEIZKÖRPER DIDIESSE
RESISTENCIAS DIDIESSE

1

2

Photo	LF Code	Watt - Volt	Dimensions (mm)	Groups	Suitable for	For machine model
1	**1755299**	450W 230V	ø 12,5x80 mm	1	DIDIESSE FR018	FROG
2	**1755300**	1200W 110V	ø 10x128 mm	1	DIDIESSE FR118	FROG

RESISTENZE ECM
HEATING ELEMENTS ECM
HEIZKÖRPER ECM
RESISTENCIAS ECM

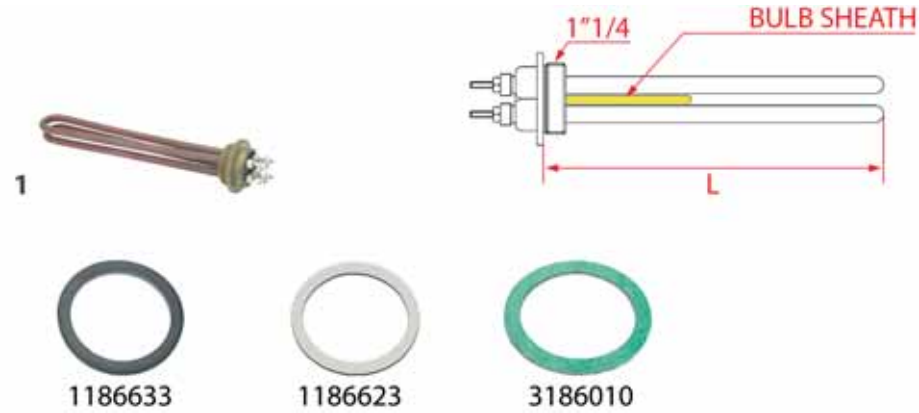

Photo	LF Code	Watt - Volt	L (mm)	Groups	Bulb sheath	Suitable for	For machine model
1	**1755134**	2400W 230V	240	2	NO	ECM C199900255	RAFFAELLO
1	**1755634**	2400W 110V	295	2	NO	ECM	RAFFAELLO

RESISTENZE ECM
HEATING ELEMENTS ECM
HEIZKÖRPER ECM
RESISTENCIAS ECM

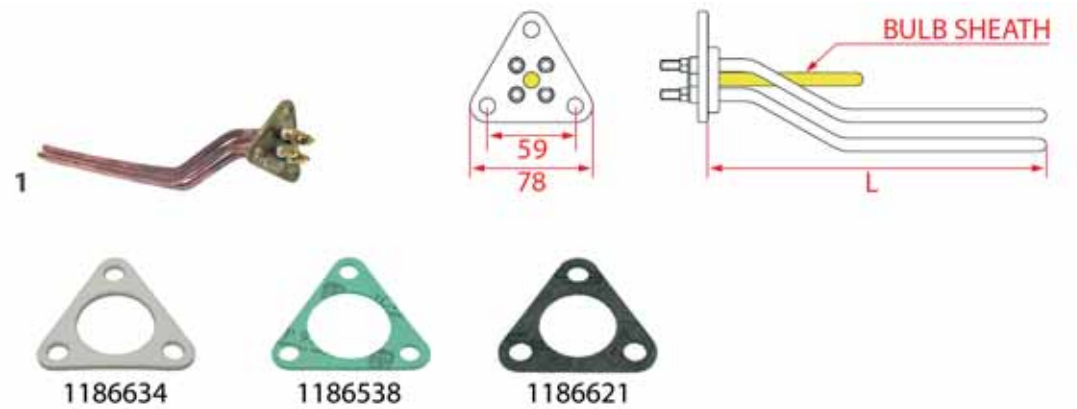

Photo	LF Code	Watt - Volt	L (mm)	Groups	Bulb sheath	Suitable for	For machine model
1	**1755330**	1800W 230V	170	1	NO	ECM	LAURA - MICHELANGELO - RAFFAELLO - VENEZIANO
1	**1755331**	3000W 230V	335	2	NO	ECM C199900513	LAURA - MICHELANGELO - RAFFAELLO - VENEZIANO
1	**1755632**	3000W 115V	350	2	NO	ECM	LAURA - MICHELANGELO - RAFFAELLO - VENEZIANO
1	**1755332**	4000W 230V	490	3	NO	ECM C199900175	LAURA - MICHELANGELO - RAFFAELLO - VENEZIANO
1	**1755333**	5000W 230V	650	4	NO	ECM C199900176	LAURA - MICHELANGELO - RAFFAELLO - VENEZIANO

RESISTENZE ECM MANUFACTURE
HEATING ELEMENTS ECM MANUFACTURE
HEIZKÖRPER ECM MANUFACTURE
RESISTENCIAS ECM MANUFACTURE

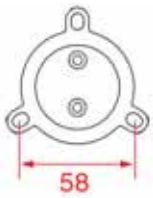

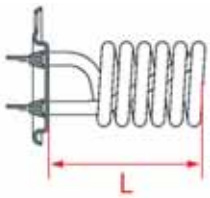

Photo	LF Code	Watt - Volt	L (mm)	Groups	Suitable for	For machine model
1	**1755293**	1400W 230V	87	1	ECM MANUFACTURE P7014.1	ELEKTRONIKA II PROFI

RESISTENZE ELEKTRA
HEATING ELEMENTS ELEKTRA
HEIZKÖRPER ELEKTRA
RESISTENCIAS ELEKTRA

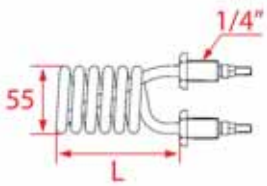

Photo	LF Code	Watt - Volt	L (mm)	Groups	Bulb sheath	Suitable for	For machine model
1	**1755340**	1200W 220V	68	1	NO	ELEKTRA 01958035	MINIVERTICALE
1	**1755638**	1200W 110V	68	1	NO	ELEKTRA 01959035	MINIVERTICALE
1	**1755014**	800W 230V	45	1	NO	ELEKTRA 01192035	MICROCASA
2	**1755015**	800W 230V	90	1	YES	ELEKTRA 02973011	MICROCASA NEW

RESISTENZE ELEKTRA
HEATING ELEMENTS ELEKTRA
HEIZKÖRPER ELEKTRA
RESISTENCIAS ELEKTRA

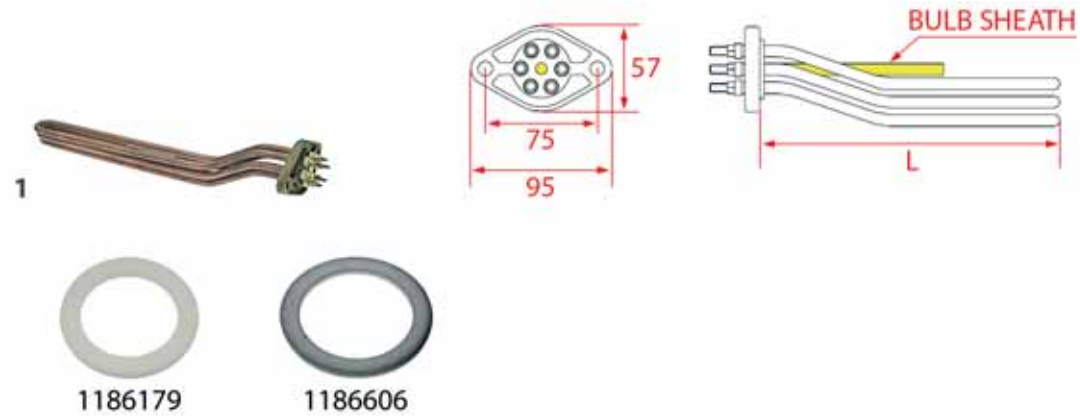

Photo	LF Code	Watt - Volt	L (mm)	Groups	Bulb sheath	Suitable for	For machine model
1	**1755261**	3500W 230/400V	330	2	YES	ELEKTRA 02159035	MODERN - SIXTIES - CLASSIC - KAPPA
1	**1755260**	5500W 240/415V	550	3	YES	ELEKTRA 01992035	CLASSIC

RESISTENZE EXPOBAR
HEATING ELEMENTS EXPOBAR
HEIZKÖRPER EXPOBAR
RESISTENCIAS EXPOBAR

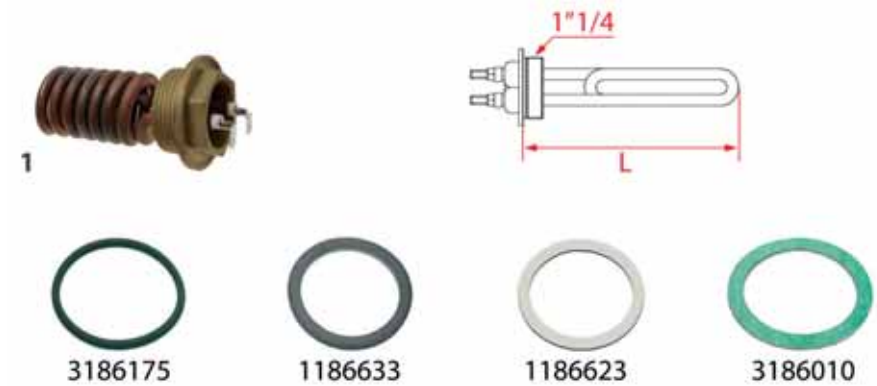

Photo	LF Code	Watt - Volt	L (mm)	Groups	Suitable for	For machine model
1	**1455051**	1200W 230V	85	1	EXPOBAR 38012000	OFFICE M - OFFICE E - DIAMANT

RESISTENZE EXPOBAR
HEATING ELEMENTS EXPOBAR
HEIZKÖRPER EXPOBAR
RESISTENCIAS EXPOBAR

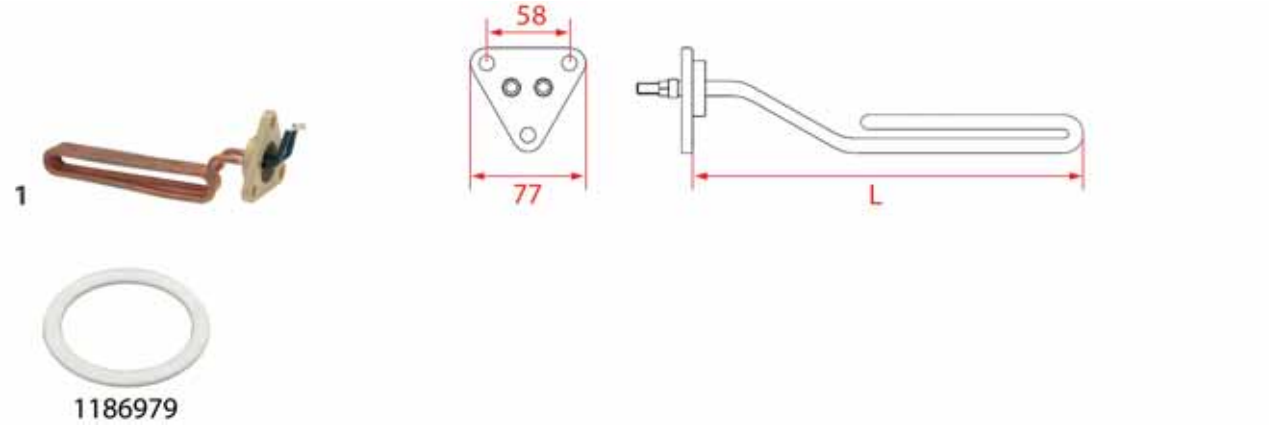

Photo	LF Code	Watt - Volt	L (mm)	Groups	Suitable for	For machine model
1	**1755204**	2500W 240V	205	1	EXPOBAR 38025001	ELEN - G10 - MINICOMPACT - MONROC - NEW ELEGANCE

RESISTENZE EXPOBAR
HEATING ELEMENTS EXPOBAR
HEIZKÖRPER EXPOBAR
RESISTENCIAS EXPOBAR

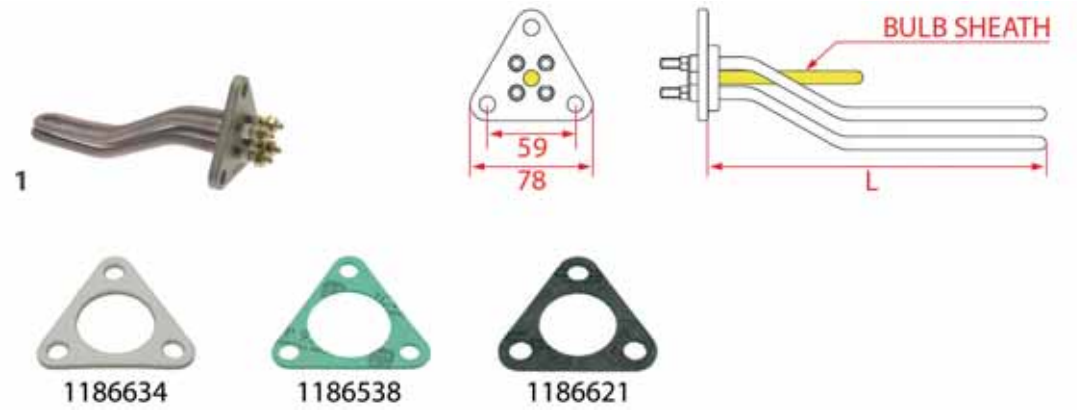

Photo	LF Code	Watt - Volt	L (mm)	Groups	Bulb sheath	Suitable for	For machine model
1	**1755331**	3000W 230V	335	2	NO	EXPOBAR 38027000	DIAMANT - EB61 - ELEN - G10 - MARKUS - MARKUS SILVER
1	**1755632**	3000W 115V	350	2	NO	EXPOBAR	DIAMANT - EB61 - ELEN - G10 - MARKUS - MARKUS SILVER
1	**1755332**	4000W 230V	490	3	NO	EXPOBAR 38040000	DIAMANT - ELEN - G10 - MARKUS - MEGACREM
1	**1755333**	5000W 230V	650	4	NO	EXPOBAR	DIAMANT - ELEN - G10 - MARKUS - MEGACREM

RESISTENZE FAEMA
HEATING ELEMENTS FAEMA
HEIZKÖRPER FAEMA
RESISTENCIAS FAEMA

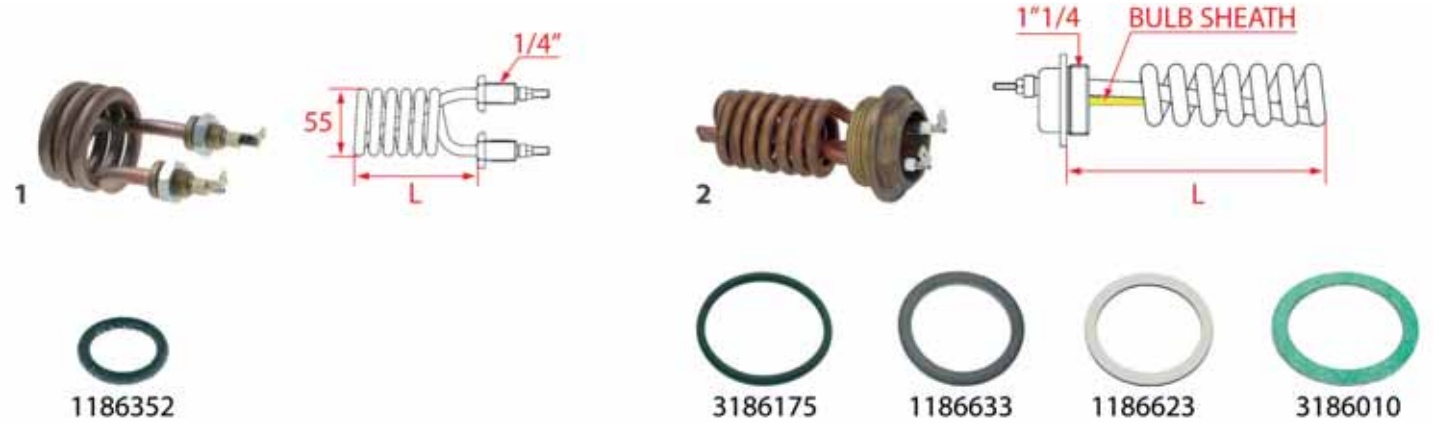

Photo	LF Code	Watt - Volt	L (mm)	Groups	Bulb sheath	Suitable for	For machine model
1	**1755035**	1000W 220V	64	1	---	FAEMA	FAMILY
1	**1755656**	1000W 110V	64	1	---	FAEMA	FAMILY
2	**1755301**	1400W 230V	100	1	YES	FAEMA	CARISMA

RESISTENZE FAEMA
HEATING ELEMENTS FAEMA
HEIZKÖRPER FAEMA
RESISTENCIAS FAEMA

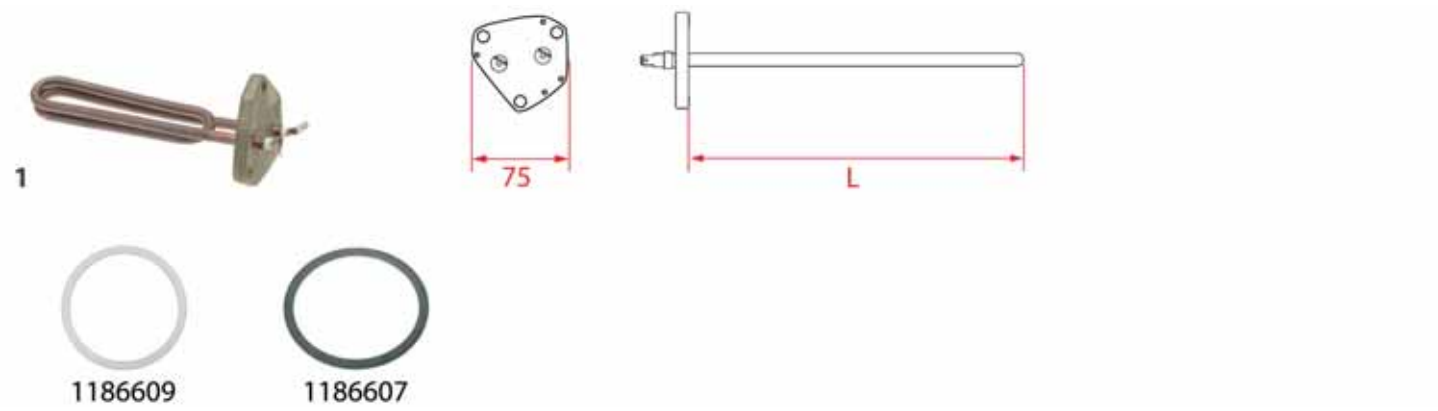

Photo	LF Code	Watt - Volt	L (mm)	Groups	Suitable for	For machine model
1	**1755082**	1300W 220V	180	1	FAEMA 442766000	E98 COMPACT
1	**1755646**	1300W 110V	180	1	FAEMA 442767000	E98 COMPACT
1	**1755077**	1500W 220V	165	1	FAEMA 3541118963	COMPACT

RESISTENZE FAEMA
HEATING ELEMENTS FAEMA
HEIZKÖRPER FAEMA
RESISTENCIAS FAEMA

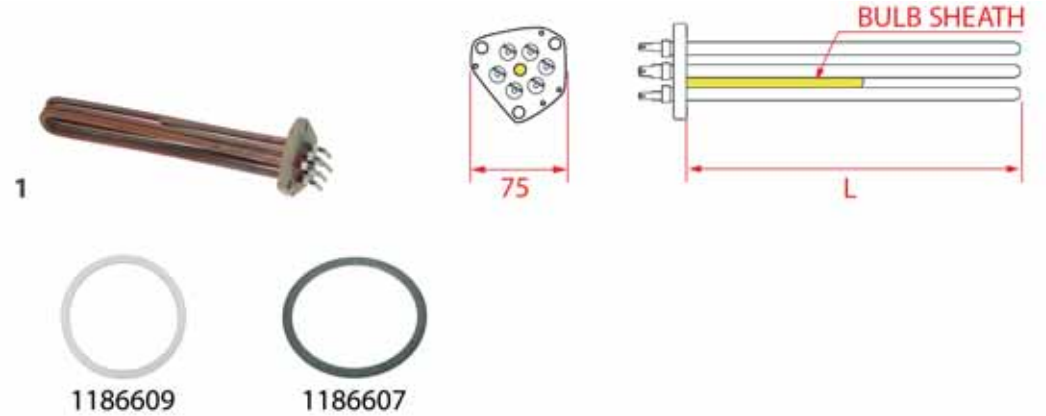

Photo	LF Code	Watt - Volt	L (mm)	Groups	Bulb sheath	Suitable for	For machine model
1	**1755083**	1800W 220V	180	1	YES	FAEMA 421601020	E98 COMPACT - E98 LEVA
1	**1755236**	2700W 220V	190	1-2	YES	FAEMA 923522020	ENOVA
1	**1755205**	2950/3420W 220/400V	305	2	YES	FAEMA 489553020	E98 COMPACT
1	**1755088**	3750/4500W 220/240V	380	2	YES	FAEMA 476513030	E98 LEVA
1	**1755089**	5790W 220V	595	3	YES	FAEMA 477512030	E98 LEVA

RESISTENZE FAEMA
HEATING ELEMENTS FAEMA
HEIZKÖRPER FAEMA
RESISTENCIAS FAEMA

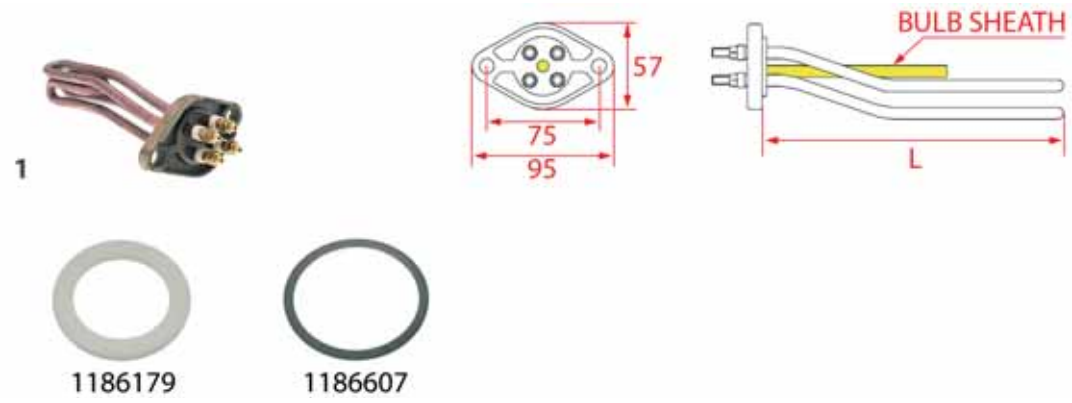

Photo	LF Code	Watt - Volt	L (mm)	Groups	Bulb sheath	Suitable for	For machine model
1	**1755101**	1500W 220V	145	1	NO	FAEMA	E61
1	**1755102**	1800W 220V	240	1	NO	FAEMA	E61
1	**1755652**	1800W 110V	240	1	NO	FAEMA	E61
1	**1755001**	2000W 230V	175	1	NO	FAEMA	E61
1	**1755079**	2440/2900W 220/240V	290	2	YES	FAEMA 3541134417	---
1	**1755107**	2600W 220V	325	2	YES	FAEMA 3541133003	DUEA - ELITE - EXPRESS - E61 - E91 - E92
1	**1755654**	2600W 110V	325	2	YES	FAEMA	DUEA - ELITE - EXPRESS - E61 - E91 - E92
1	**5038761**	3500W 220V	390	3	YES	FAEMA 3541134418	DUE - E61 - E91
1	**1755108**	3700W 220V	455	3	YES	FAEMA 3541133004	DUE - E61 - E91
1	**1755109**	5000W 220V	660	4	NO	FAEMA 3581130091	DUE - E61 - E91

RESISTENZE FAEMA
HEATING ELEMENTS FAEMA
HEIZKÖRPER FAEMA
RESISTENCIAS FAEMA

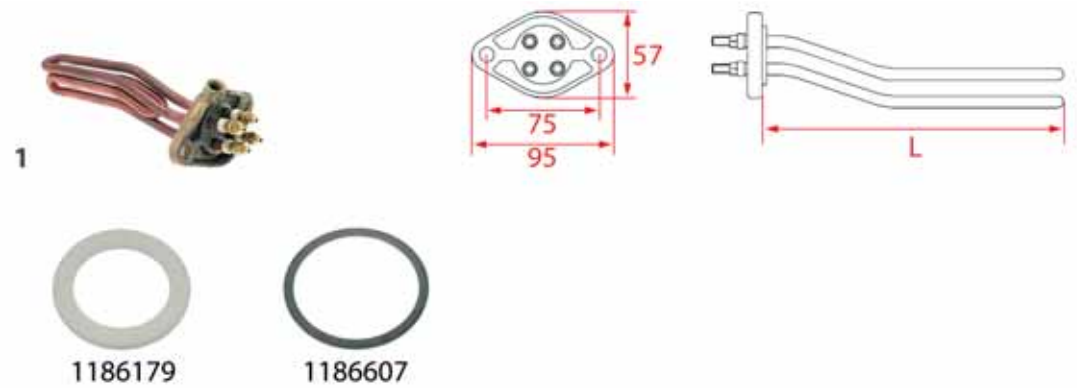

Photo	LF Code	Watt - Volt	L (mm)	Groups	Bulb sheath	Suitable for	For machine model
1	**1755116**	2400W 220V	170	1	YES	FAEMA 3541116635	DUEA - ELITE - EXPRESS - E61 - E91 - E92
1	**1755115**	2500W 220V	300	2	YES	FAEMA	DUEA - ELITE - EXPRESS - E61 - E91 - E92

RESISTENZE FAEMA
HEATING ELEMENTS FAEMA
HEIZKÖRPER FAEMA
RESISTENCIAS FAEMA

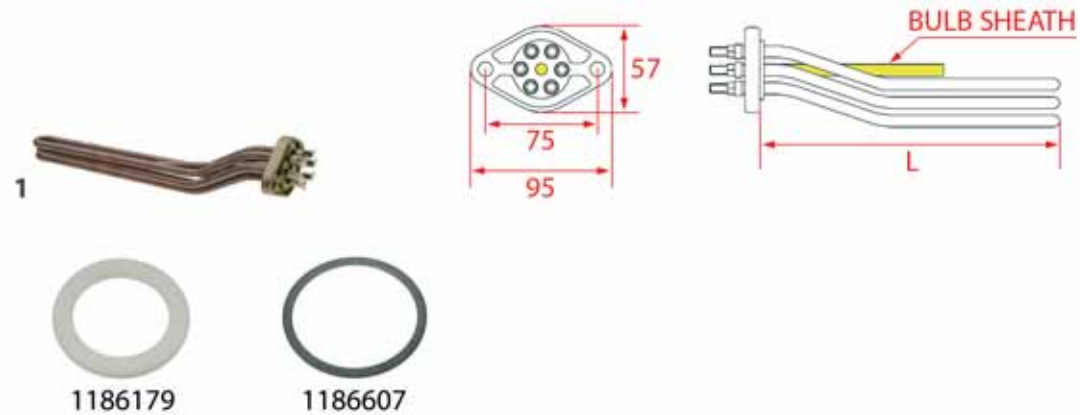

Photo	LF Code	Watt - Volt	L (mm)	Groups	Bulb sheath	Suitable for	For machine model
1	**1755117**	3780/4500W 230/400V	295	1-2	YES	FAEMA 911544010	DUEA - ELITE - EMBLEMA - ENOVA - EXPRESS
1	**1755118**	4500W 230/400V	395	2-3	YES	FAEMA 911545010	DUEA - ELITE - EMBLEMA - ENOVA - EXPRESS - E61
1	**1755450**	4500W 230/400V	395	2-3	YES	FAEMA	E61
1	**1755119**	5715W 230/400V	610	4	YES	FAEMA 911546010	DUEA - ELITE - EMBLEMA - ENOVA - EXPRESS - E61
1	**1755296**	5400/6420W 220/240V	620	3-4	YES	FAEMA 927597010	EMBLEMA - TEOREMA

RESISTENZE FIAMMA RST
HEATING ELEMENTS FIAMMA RST
HEIZKÖRPER FIAMMA RST
RESISTENCIAS FIAMMA RST

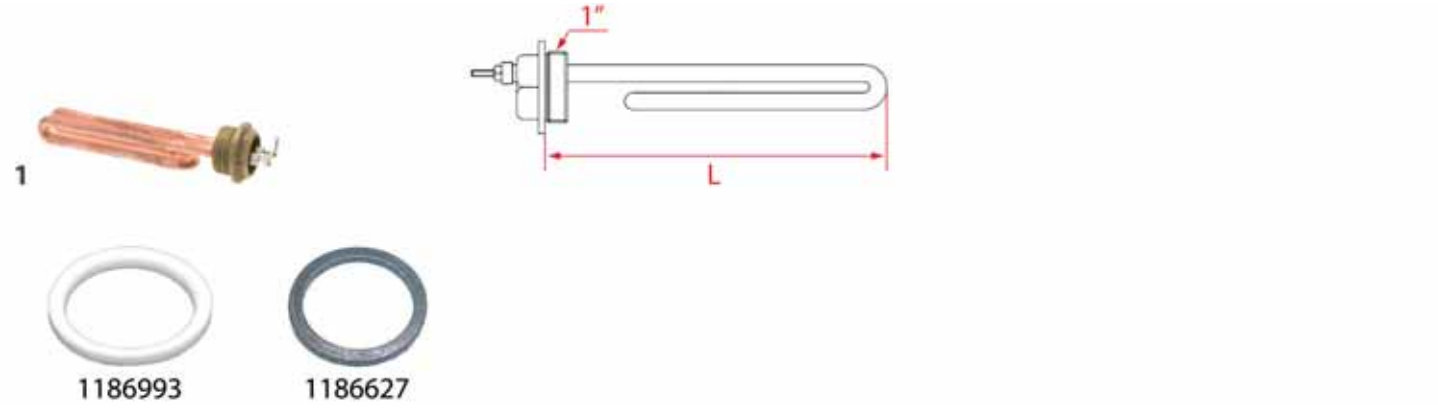

Photo	LF Code	Watt - Volt	L (mm)	Groups	Suitable for	For machine model
1	**1755287**	1800W 230V	155	1	FIAMMA 4.0.000.0218	MARINA

RESISTENZE FIAMMA RST
HEATING ELEMENTS FIAMMA RST
HEIZKÖRPER FIAMMA RST
RESISTENCIAS FIAMMA RST

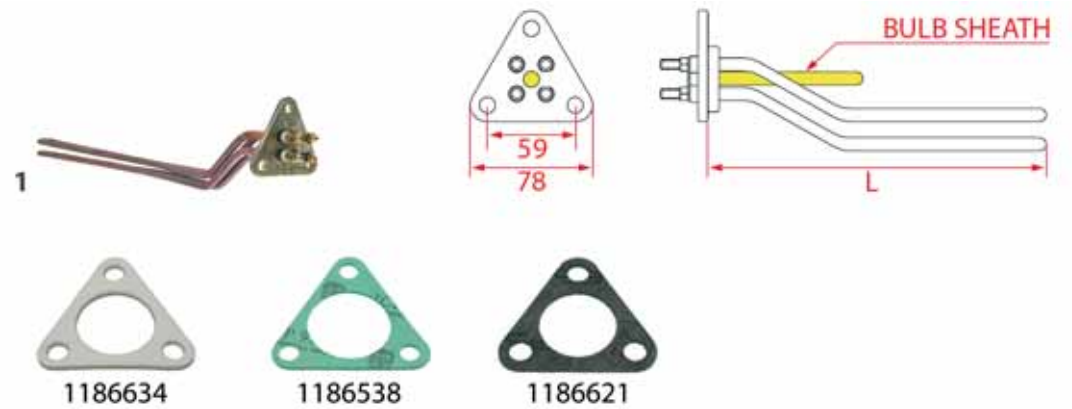

Photo	LF Code	Watt - Volt	L (mm)	Groups	Bulb sheath	Suitable for	For machine model
1	**1755330**	1800W 230V	170	1	NO	FIAMMA 4.0.000.0214	ATLANTIC
1	**1755002**	3500W 230V	350	2	NO	FIAMMA 5.0.000.0802	ATLANTIC - PRESTIGE
1	**1755003**	5000W 230V	450	3	NO	FIAMMA 4.0.000.0217	PRESTIGE

RESISTENZE FIORENZATO CS
HEATING ELEMENTS FIORENZATO CS
HEIZKÖRPER FIORENZATO CS
RESISTENCIAS FIORENZATO CS

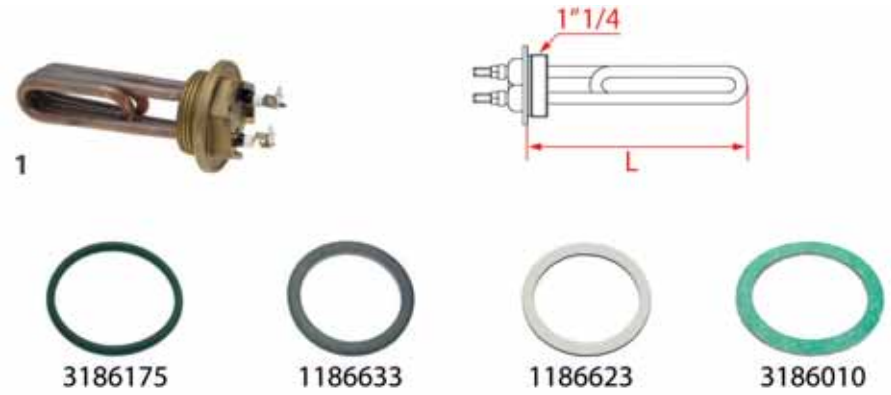

Photo	LF Code	Watt - Volt	L (mm)	Groups	Suitable for	For machine model
1	**1755603**	1300W 230V	105	1	FIORENZATO A2100308	COLOMBINA
1	**1755607**	1200W 110V	100	1	FIORENZATO A2100309	COLOMBINA

RESISTENZE FIORENZATO CS
HEATING ELEMENTS FIORENZATO CS
HEIZKÖRPER FIORENZATO CS
RESISTENCIAS FIORENZATO CS

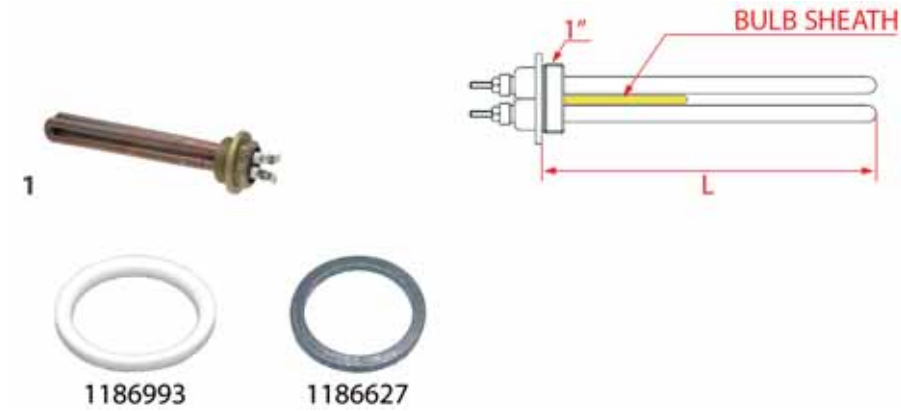

Photo	LF Code	Watt - Volt	L (mm)	Groups	Bulb sheath	Suitable for	For machine model
1	**1755263**	1800W 230V	155	1	NO	FIORENZATO A2100165	BRICOLETTA - VOLANTE

RESISTENZE FIORENZATO CS
HEATING ELEMENTS FIORENZATO CS
HEIZKÖRPER FIORENZATO CS
RESISTENCIAS FIORENZATO CS

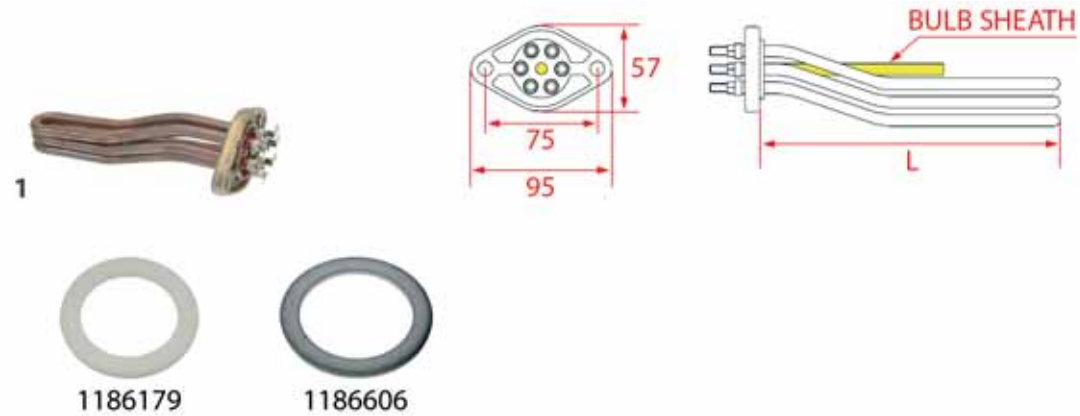

Photo	LF Code	Watt - Volt	L (mm)	Groups	Bulb sheath	Suitable for	For machine model
1	**1755127**	2700W 230V	160	1	YES	FIORENZATO A2100146	DUCALE
1	**1755011**	3500W 230V	300	2	YES	FIORENZATO A2100031	MURANO - FENICE - LIDO - VENEZIA
1	**1755012**	4000W 230V	555	3	YES	FIORENZATO A2100120	DUCALE - MURANO - FENICE - LIDO - VENEZIA

RESISTENZE FRACINO
HEATING ELEMENTS FRACINO
HEIZKÖRPER FRACINO
RESISTENCIAS FRACINO

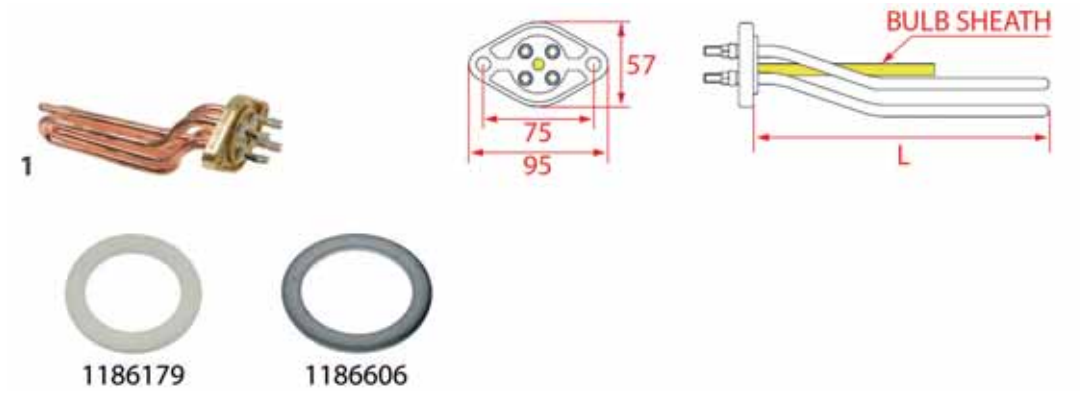

Photo	LF Code	Watt - Volt	L (mm)	Groups	Bulb sheath	Suitable for	For machine model
1	**1755290**	2700W 230V	175	1	YES	FRACINO FC161	LITTLE GEM
1	**1755291**	4000W 230V	400	2	YES	FRACINO FC162	BAMBINO - RETRO

RESISTENZE FRACINO
HEATING ELEMENTS FRACINO
HEIZKÖRPER FRACINO
RESISTENCIAS FRACINO

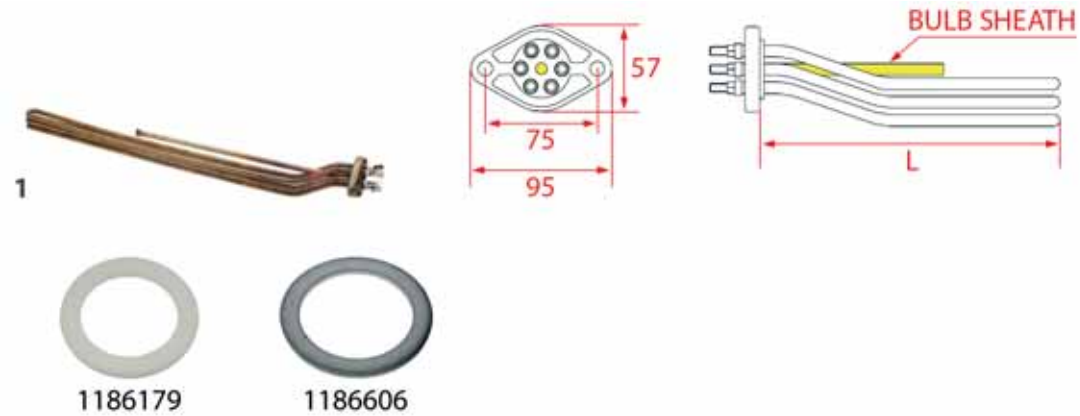

Photo	LF Code	Watt - Volt	L (mm)	Groups	Bulb sheath	Suitable for	For machine model
1	**1755292**	7500W 230V	550	3	YES	FRACINO FC163	BAMBINO - RETRO

RESISTENZE FUTURMAT
HEATING ELEMENTS FUTURMAT
HEIZKÖRPER FUTURMAT
RESISTENCIAS FUTURMAT

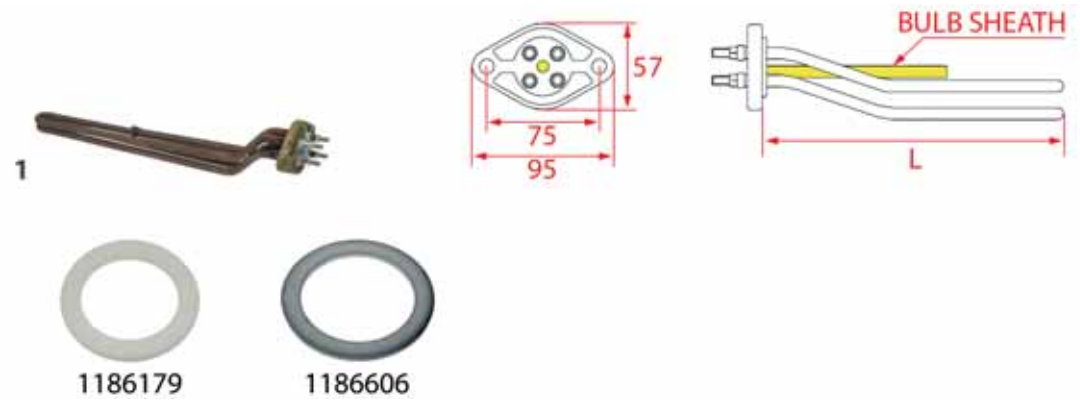

Photo	LF Code	Watt - Volt	L (mm)	Groups	Bulb sheath	Suitable for	For machine model
1	**1755136**	3000W 230V	250	1	YES	FUTURMAT 08024804	E61 - ARIETE - CUSTOM - F3 - PALANCA - RIMINI
1	**1755107**	2600W 220V	325	2	YES	FUTURMAT 02212439	E61 - ARIETE - CUSTOM - F3 - PALANCA - RIMINI
1	**1755654**	2600W 110V	325	2	YES	FUTURMAT 07949908	E61 - ARIETE - CUSTOM - F3 - PALANCA - RIMINI
1	**1755210**	3500W 230V	340	2	YES	FUTURMAT 08148002	E61 - ARIETE - CUSTOM - F3 - PALANCA - RIMINI
1	**1755108**	3700W 220V	455	3	YES	FUTURMAT 02212538	E61 - ARIETE - CUSTOM - F3 - PALANCA - RIMINI
1	**1755109**	5000W 220V	660	4	NO	FUTURMAT 02212637	E61 - ARIETE - CUSTOM - F3 - PALANCA - RIMINI

RESISTENZE GAGGIA
HEATING ELEMENTS GAGGIA
HEIZKÖRPER GAGGIA
RESISTENCIAS GAGGIA

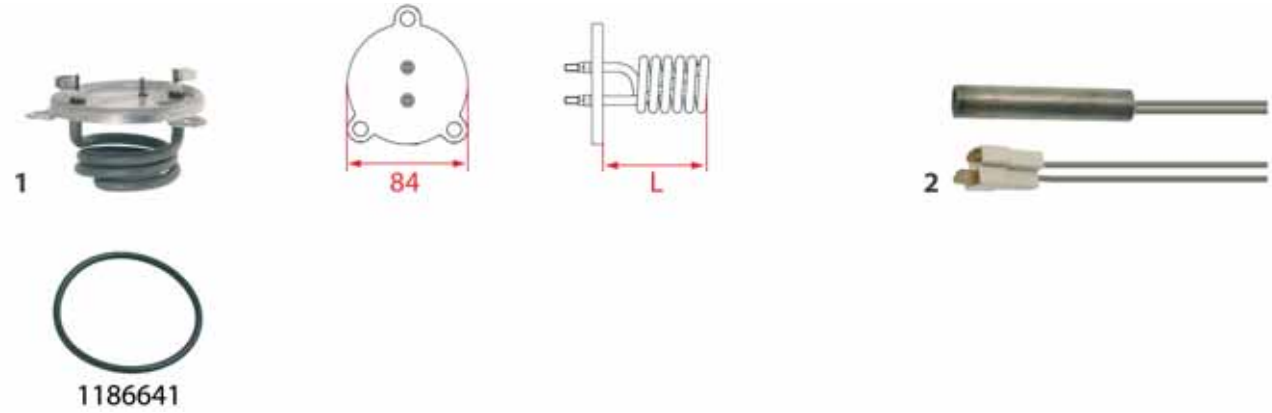

Photo	LF Code	Watt - Volt	L (mm)	Groups	Suitable for	For machine model
1	**1755050**	920/1000W 230/240V	46	1	GAGGIA S331335	G105 - G106
1	**1755166**	1000W 120V	46	1	GAGGIA S331334	G105 - G106
2	**1755826**	80W 240V	ø 12x55	1-2-3-4	GAGGIA DM1804/001	GD - GE - LCD - TS -XD - XE

RESISTENZE GAGGIA
HEATING ELEMENTS GAGGIA
HEIZKÖRPER GAGGIA
RESISTENCIAS GAGGIA

Photo	LF Code	Watt - Volt	L (mm)	Groups	Bulb sheath	Suitable for	For machine model
1	**1755008**	2500W 220/380V	220	1	YES	GAGGIA DM1615/220-240	GD COMPAC - GE COMPAC
1	**1755303**	2500W 220/380V	240	1	YES	GAGGIA	GD COMPAC - GE COMPAC - TE - TD
1	**1755056**	4000/4760W 220/240V	310	2	YES	GAGGIA 11003362	GD - GE - LCD - XD - XE
1	**1755057**	5455/5950W 230/240V	400	3	YES	GAGGIA 11003363	GE - GD - XE - XD
1	**1755271**	6000/7140W 220/240V	490	4	YES	GAGGIA 11003364	GE - GD - XE - XD
2	**1755267**	4760W 240V	315	2	YES	GAGGIA 4027004002	DECO
2	**1755268**	5000/5950W 220/240V	400	3	YES	GAGGIA 4027004003	DECO
2	**1755269**	7140W 240V	500	3	YES	GAGGIA 4027004004	DECO

RESISTENZE GAGGIA
HEATING ELEMENTS GAGGIA
HEIZKÖRPER GAGGIA
RESISTENCIAS GAGGIA

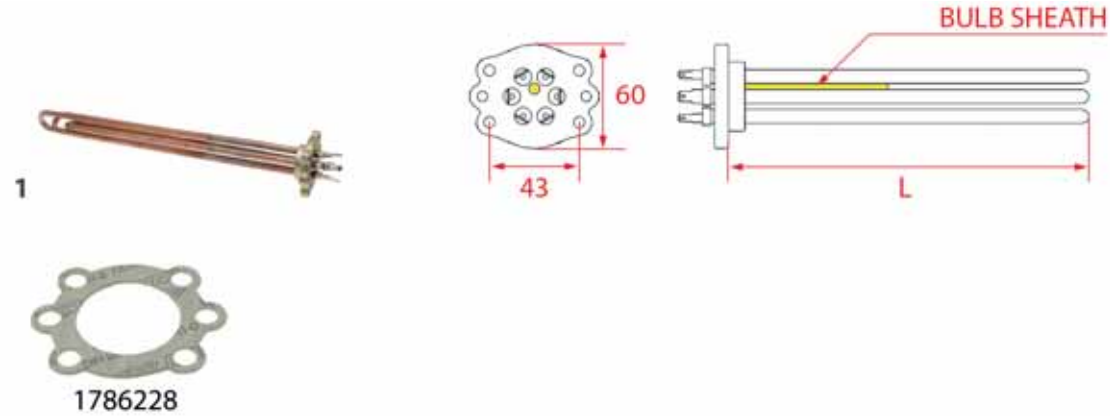

Photo	LF Code	Watt - Volt	L (mm)	Groups	Bulb sheath	Suitable for	For machine model
1	**1755275**	5000W 240V	345	2	NO	GAGGIA ES9190.261.00A	E90 - D90
1	**1755265**	4200/5000W 220/240V	350	2	NO	GAGGIA 9190.262.00A	E90 - D90
1	**1755266**	6000W 240V	435	3	YES	GAGGIA 9190.263.00A	E90 - D90

RESISTENZE GAGGIA
HEATING ELEMENTS GAGGIA
HEIZKÖRPER GAGGIA
RESISTENCIAS GAGGIA

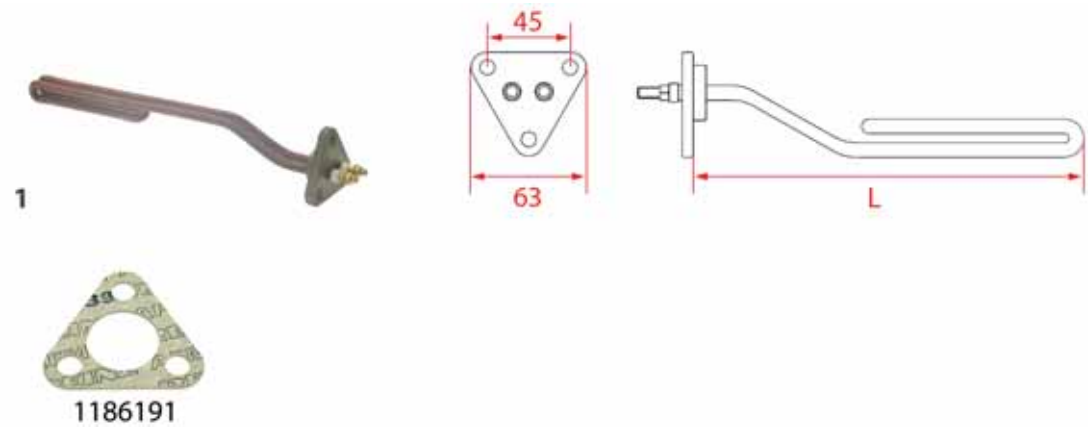

Photo	LF Code	Watt - Volt	L (mm)	Groups	Suitable for	For machine model
1	**1755120**	1250W 220V	325	2	GAGGIA	TELL

RESISTENZE GAGGIA
HEATING ELEMENTS GAGGIA
HEIZKÖRPER GAGGIA
RESISTENCIAS GAGGIA

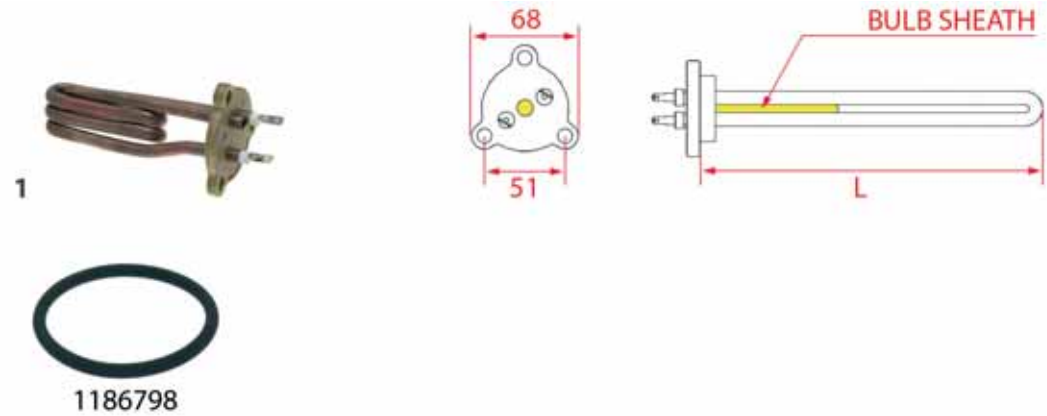

Photo	LF Code	Watt - Volt	L (mm)	Groups	Bulb sheath	Suitable for	For machine model
1	**1755264**	1500W 230V	125	1	YES	GAGGIA 9190.297.00A	TS - GE ONE - GD ONE

RESISTENZE GAGGIA
HEATING ELEMENTS GAGGIA
HEIZKÖRPER GAGGIA
RESISTENCIAS GAGGIA

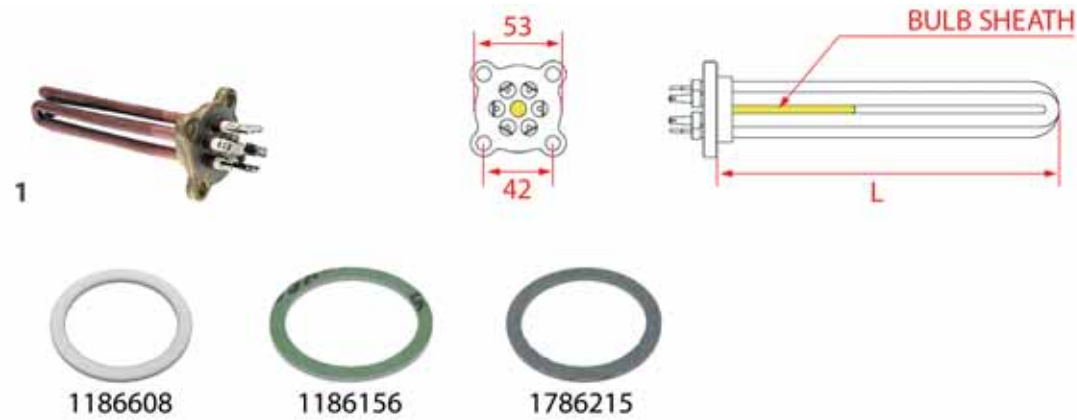

Photo	LF Code	Watt - Volt	L (mm)	Groups	Bulb sheath	Suitable for	For machine model
1	**1755123**	2000W 220/380V	130	1	NO	GAGGIA	OLD MODELS - MODELLI VECCHI
1	**1755124**	4000W 220V	347	2	NO	GAGGIA	OLD MODELS - MODELLI VECCHI
1	**1755125**	5000W 220/400V	450	3	NO	GAGGIA	OLD MODELS - MODELLI VECCHI

RESISTENZE GAGGIA
HEATING ELEMENTS GAGGIA
HEIZKÖRPER GAGGIA
RESISTENCIAS GAGGIA

Photo	LF Code	Watt - Volt	L (mm)	Groups	Suitable for	For machine model
1	**1755302**	1000W 230V	58	1	GAGGIA 11001002	NEW ESPRESSO 06
2	**1755298**	900W 230V	50	1	GAGGIA 11024000	GRAN GAGGIA

RESISTENZE GAGGIA SPAGNA
HEATING ELEMENTS GAGGIA SPAGNA
HEIZKÖRPER GAGGIA SPAGNA
RESISTENCIAS GAGGIA SPAGNA

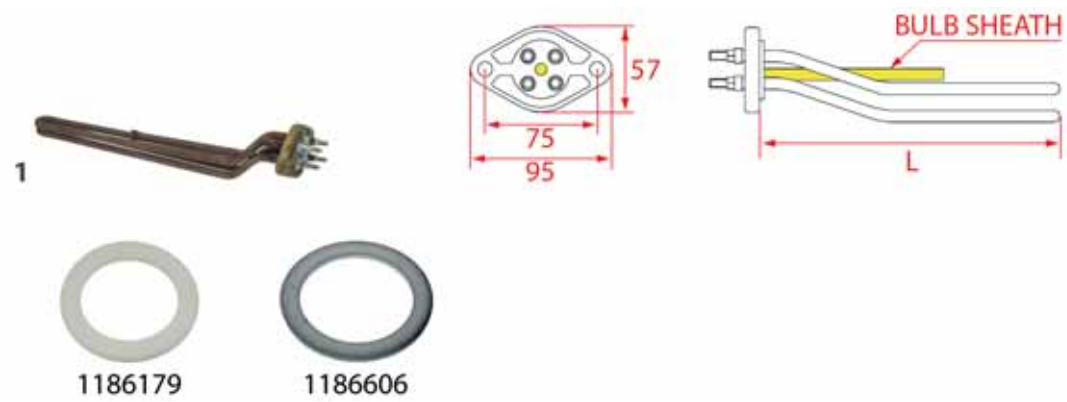

Photo	LF Code	Watt - Volt	L (mm)	Groups	Bulb sheath	Suitable for	For machine model
1	**1755136**	3000W 230V	250	1	YES	GAGGIA SPAGNA 08024804	BELLA - G6 - KB - NERA - PALANCA
1	**1755107**	2600W 220V	325	2	YES	GAGGIA SPAGNA 02212439	BELLA - G6 - KB - NERA - PALANCA
1	**1755654**	2600W 110V	325	2	YES	GAGGIA SPAGNA 07949908	BELLA - G6 - KB - NERA - PALANCA
1	**1755210**	3500W 230V	340	2	YES	GAGGIA SPAGNA 08148002	BELLA - G6 - KB - NERA - PALANCA
1	**1755108**	3700W 220V	455	3	YES	GAGGIA SPAGNA 02212538	BELLA - G6 - KB - NERA - PALANCA
1	**1755109**	5000W 220V	660	4	NO	GAGGIA SPAGNA 02212637	BELLA - G6 - KB - NERA - PALANCA

RESISTENZE GRIMAC
HEATING ELEMENTS GRIMAC
HEIZKÖRPER GRIMAC
RESISTENCIAS GRIMAC

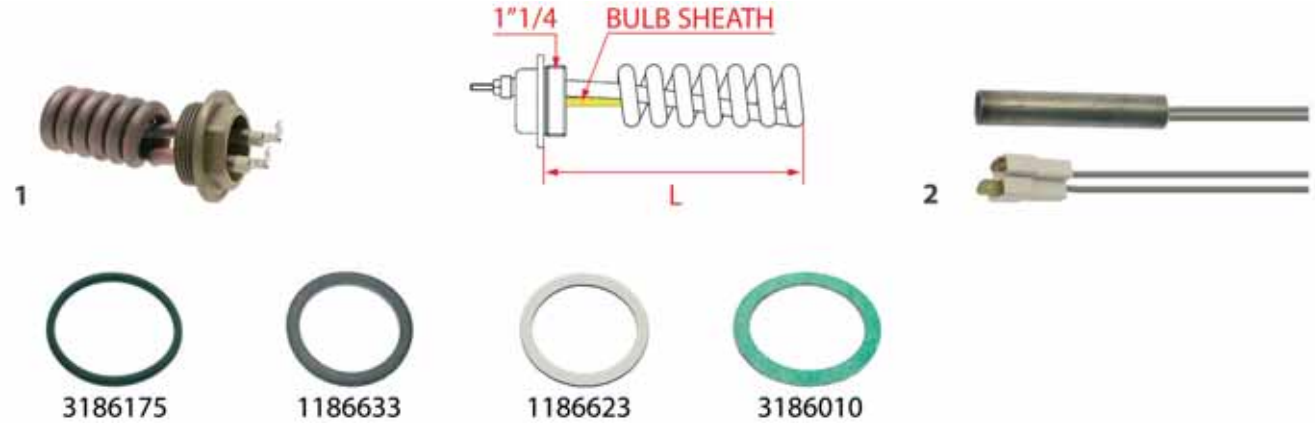

Photo	LF Code	Watt - Volt	L (mm)	Groups	Bulb sheath	Suitable for	For machine model
1	**1755603**	1300W 230V	105	1	NO	GRIMAC 1240100216-W902	MIA - NEWCIALDAVAPOR - VAPORDOUBLE
1	**1755607**	1200W 110V	100	1	NO	GRIMAC 1240100001-MG086	MIA - NEWCIALDAVAPOR - VAPORDOUBLE
2	**1755180**	500W 230V	ø 12.5x80	1	---	GRIMAC 1240200001-MG353	AMBRA - DADAVAPORDOUBLE - NEWCIALDAVAPOR
2	**1755181**	800W 230V	ø 12.5x90	1	---	GRIMAC 1240200005-MG549	DADAVAPORDOUBLE - NUVOLA - OPALE

RESISTENZE GRIMAC
HEATING ELEMENTS GRIMAC
HEIZKÖRPER GRIMAC
RESISTENCIAS GRIMAC

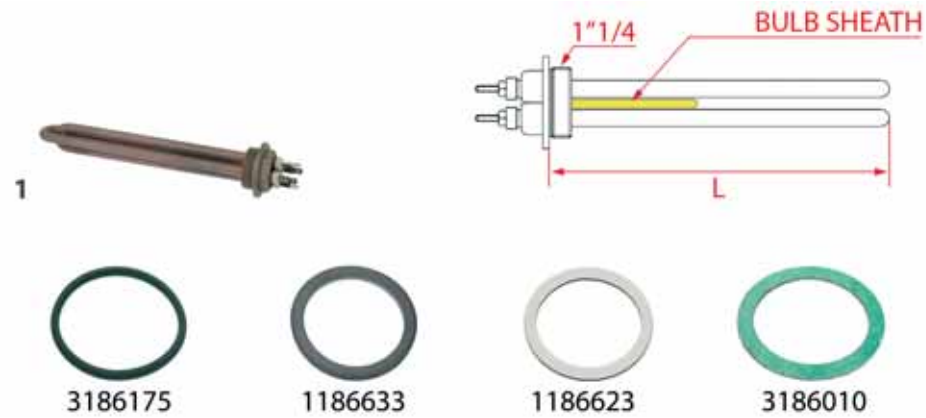

Photo	LF Code	Watt - Volt	L (mm)	Groups	Bulb sheath	Suitable for	For machine model
1	**1755403**	3300W 230V	230	2	NO	GRIMAC 1240100127-GRC102	ECLISSE - G10 - TEN - TWENTY
1	**1755404**	4500W 230V	345	3	NO	GRIMAC 1240100129-GRT103	G10 - TEN - TWENTY

RESISTENZE GRIMAC
HEATING ELEMENTS GRIMAC
HEIZKÖRPER GRIMAC
RESISTENCIAS GRIMAC

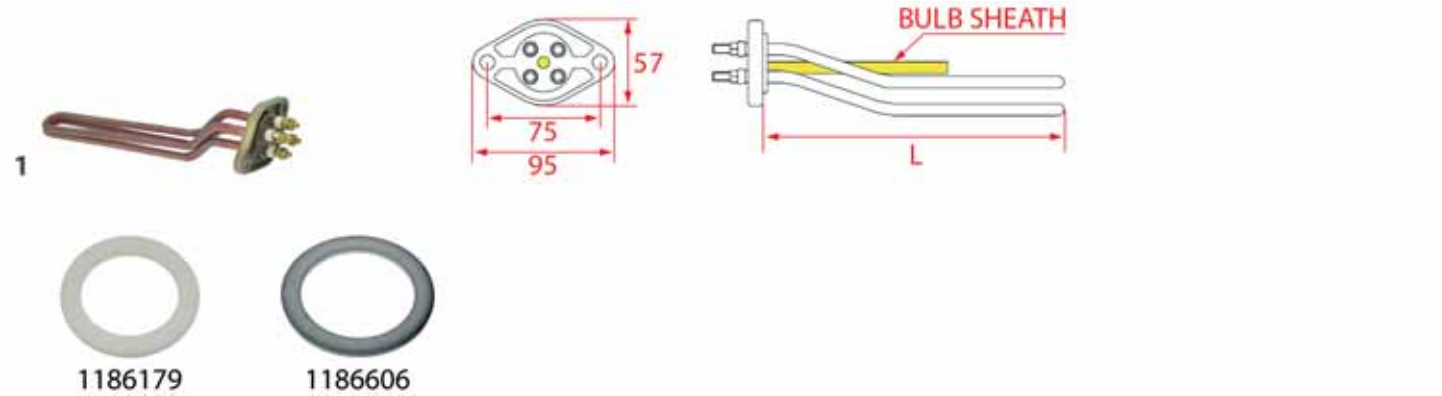

Photo	LF Code	Watt - Volt	L (mm)	Groups	Bulb sheath	Suitable for	For machine model
1	**1755400**	3200W 230V	340	2	NO	GRIMAC 1240100121-GR705	ZOLAI - ZOLAII
1	**1755401**	4500W 230V	470	3	NO	GRIMAC 1240100124-GR706	ZOLAI - ZOLAII
1	**1755402**	6000W 230V	630	4	NO	GRIMAC 1240100084-GR707	ZOLAI - ZOLAII

RESISTENZE GRIMAC
HEATING ELEMENTS GRIMAC
HEIZKÖRPER GRIMAC
RESISTENCIAS GRIMAC

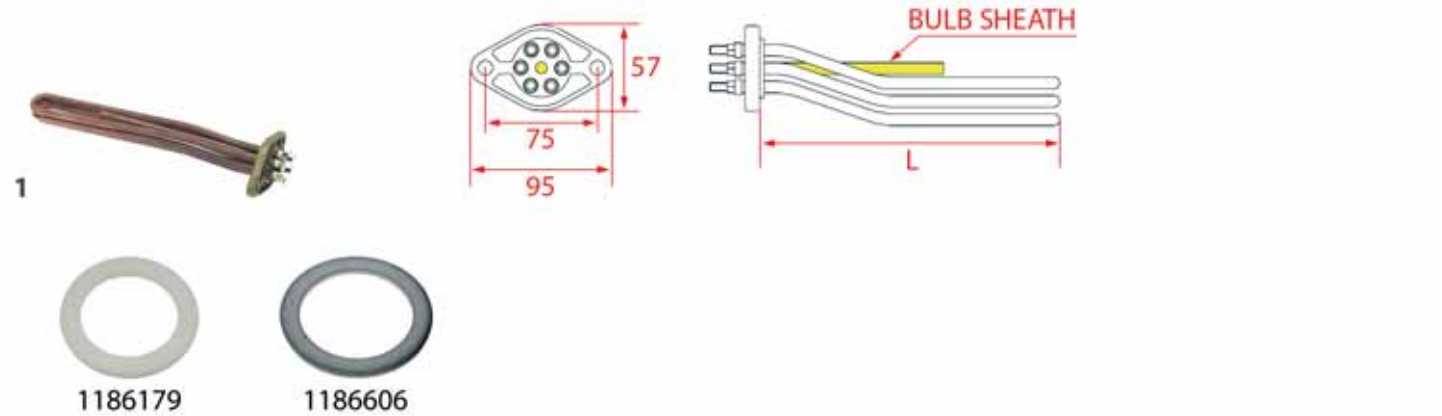

Photo	LF Code	Watt - Volt	L (mm)	Groups	Bulb sheath	Suitable for	For machine model
1	**1755011**	3500W 230V	300	2	YES	GRIMAC A2100031	G11
1	**1755012**	4000W 230V	555	3	YES	GRIMAC A2100120	G11

RESISTENZE ISOMAC
HEATING ELEMENTS ISOMAC
HEIZKÖRPER ISOMAC
RESISTENCIAS ISOMAC

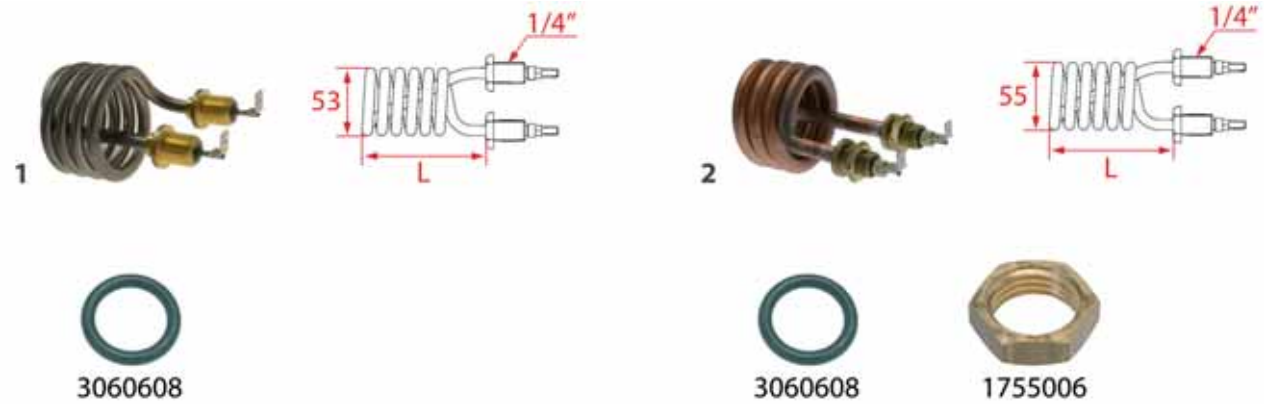

Photo	LF Code	Watt - Volt	L (mm)	Groups	Suitable for	For machine model
1	**5052788**	900W 230V	67	1	ISOMAC IS000378	GIADA - MAVERICK
2	**1755340**	1200W 220V	68	1	ISOMAC IS000505	VENUS
2	**1755638**	1200W 110V	68	1	ISOMAC IS000375	VENUS

RESISTENZE ISOMAC
HEATING ELEMENTS ISOMAC
HEIZKÖRPER ISOMAC
RESISTENCIAS ISOMAC

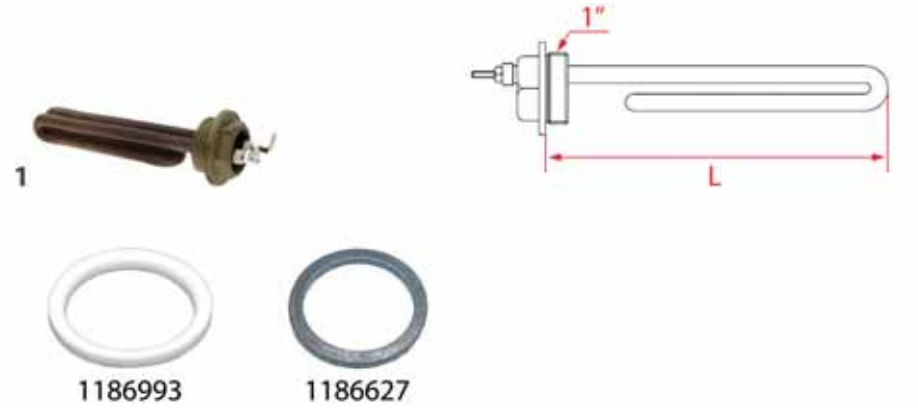

Photo	LF Code	Watt - Volt	L (mm)	Groups	Suitable for	For machine model
1	**5062915**	1400W 230V	130	1	ISOMAC IS000743	MILLENNIUM - MONDIALE - TEA - ZAFFIRO

RESISTENZE ITALCREM
HEATING ELEMENTS ITALCREM
HEIZKÖRPER ITALCREM
RESISTENCIAS ITALCREM

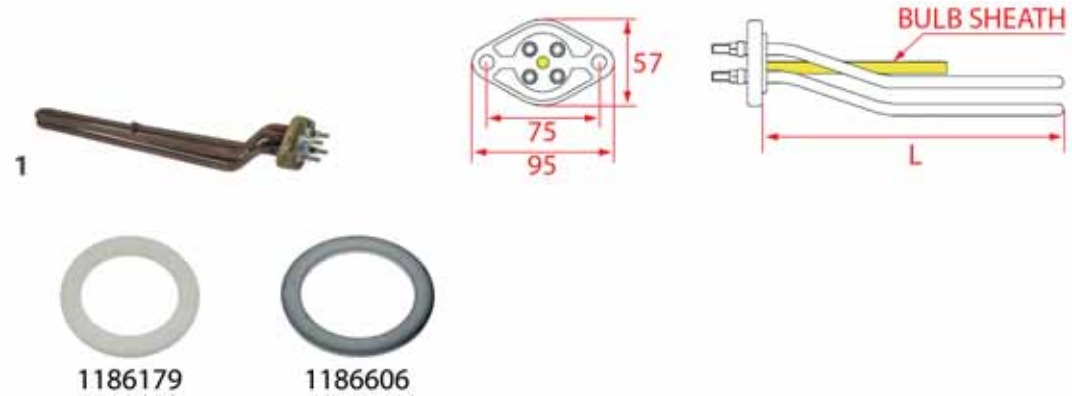

Photo	LF Code	Watt - Volt	L (mm)	Groups	Bulb sheath	Suitable for	For machine model
1	**1755136**	3000W 230V	250	1	YES	ITALCREM 08024804	CAPRI - IT4 - PALANCA
1	**1755107**	2600W 220V	325	2	YES	ITALCREM 02212439	CAPRI - IT4 - PALANCA
1	**1755654**	2600W 110V	325	2	YES	ITALCREM 07949908	CAPRI - IT4 - PALANCA
1	**1755210**	3500W 230V	340	2	YES	ITALCREM 08148002	CAPRI - IT4 - PALANCA
1	**1755108**	3700W 220V	455	3	YES	ITALCREM 02212538	CAPRI - IT4 - PALANCA
1	**1755109**	5000W 220V	660	4	NO	ITALCREM 02212637	CAPRI - IT4 - PALANCA

RESISTENZE LAVAZZA
HEATING ELEMENTS LAVAZZA
HEIZKÖRPER LAVAZZA
RESISTENCIAS LAVAZZA

Photo	LF Code	Watt - Volt	Dimensions (mm)	Groups	Suitable for	For machine model
1	**1755256**	150W 230V	ø 6.5x50	1-2-3-4	LAVAZZA 10065898	LB4100 - LB4103
2	**1755826**	80W 240V	ø 12x55	1-2-3-4	LAVAZZA 10062026	LB4800

RESISTENZE LAVAZZA
HEATING ELEMENTS LAVAZZA
HEIZKÖRPER LAVAZZA
RESISTENCIAS LAVAZZA

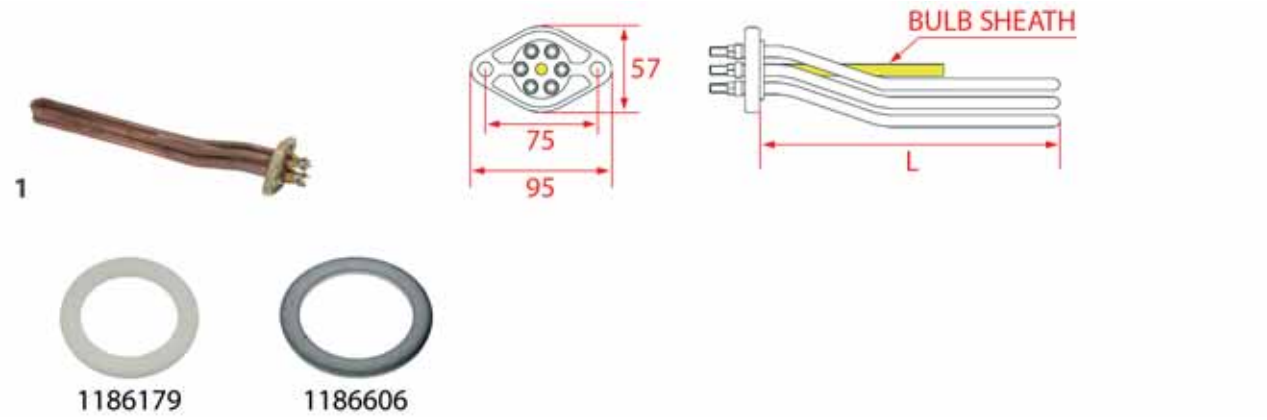

Photo	LF Code	Watt - Volt	L (mm)	Groups	Bulb sheath	Suitable for	For machine model
1	**1755258**	3400/3700W 230/240V	320	2	YES	LAVAZZA 10066109	LB4700 - LB4700R - LB4701R

RESISTENZE LAVAZZA
HEATING ELEMENTS LAVAZZA
HEIZKÖRPER LAVAZZA
RESISTENCIAS LAVAZZA

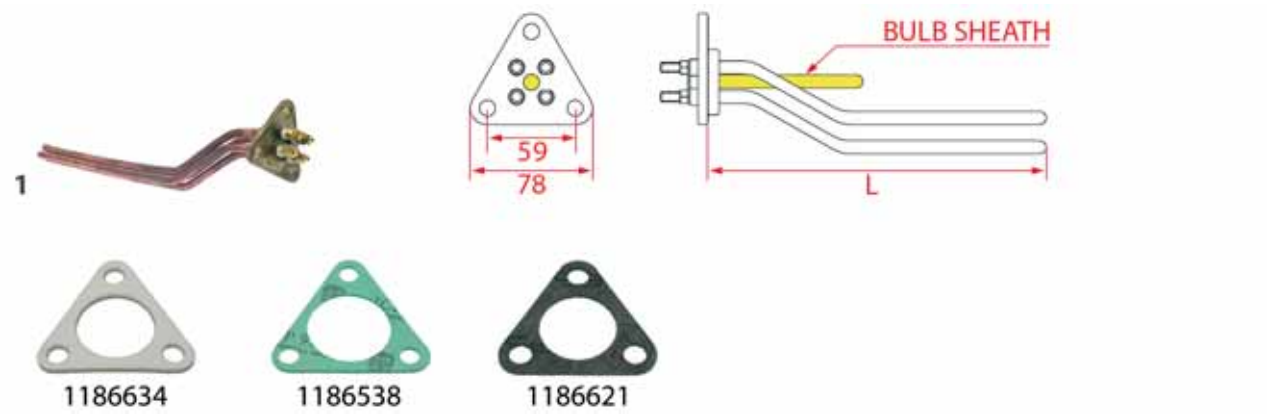

Photo	LF Code	Watt - Volt	L (mm)	Groups	Bulb sheath	Suitable for	For machine model
1	**1755331**	3000W 230V	335	2	NO	LAVAZZA 10084205	LB4600
1	**1755632**	3000W 115V	350	2	NO	LAVAZZA	LB4600

RESISTENZE MAGISTER
HEATING ELEMENTS MAGISTER
HEIZKÖRPER MAGISTER
RESISTENCIAS MAGISTER

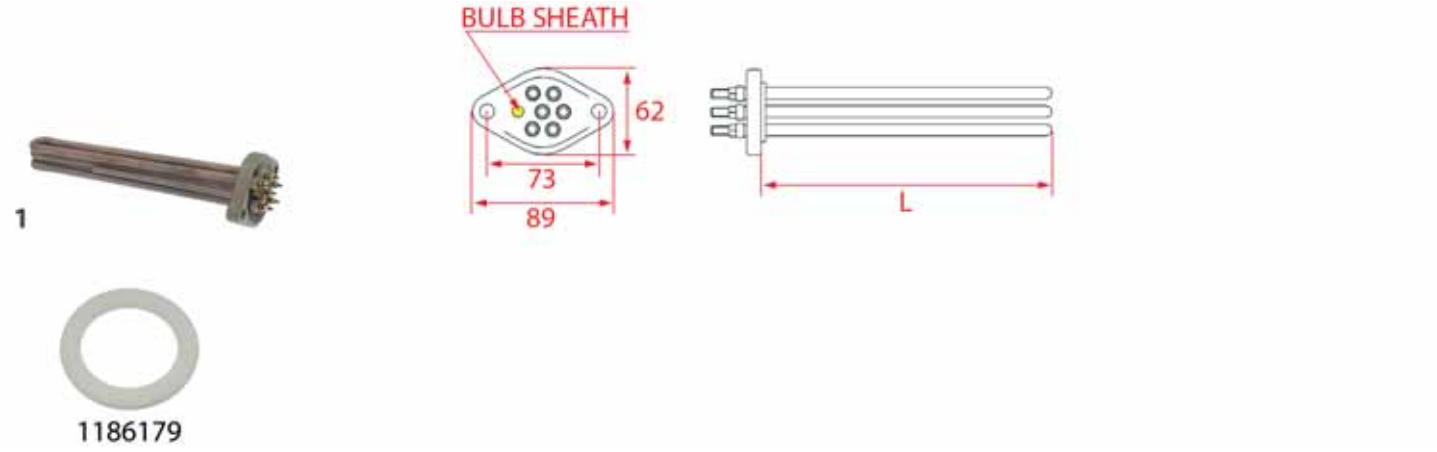

Photo	LF Code	Watt - Volt	L (mm)	Groups	Bulb sheath	Suitable for	For machine model
1	**1755206**	2700W 230V	210	2	YES	MAGISTER 180052	ES70

RESISTENZE MAIRALI
HEATING ELEMENTS MAIRALI
HEIZKÖRPER MAIRALI
RESISTENCIAS MAIRALI

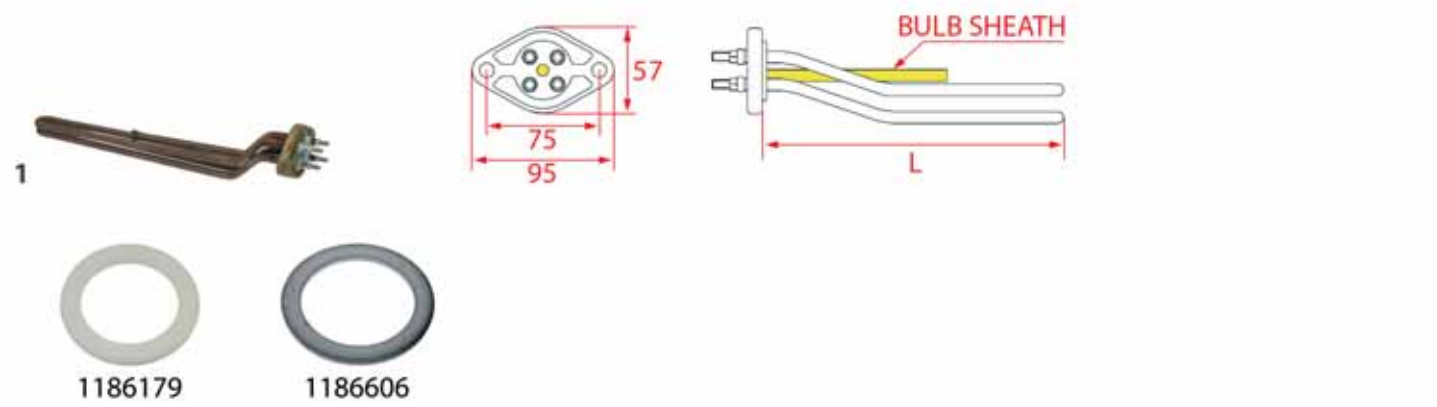

Photo	LF Code	Watt - Volt	L (mm)	Groups	Bulb sheath	Suitable for	For machine model
1	**1755136**	3000W 230V	250	1	YES	MAIRALI 08024804	ARIANNE - GIULIETTA - PALANCA
1	**1755107**	2600W 220V	325	2	YES	MAIRALI 02212439	ARIANNE - GIULIETTA - PALANCA
1	**1755654**	2600W 110V	325	2	YES	MAIRALI 07949908	ARIANNE - GIULIETTA - PALANCA
1	**1755210**	3500W 230V	340	2	YES	MAIRALI 08148002	ARIANNE - GIULIETTA - PALANCA
1	**1755108**	3700W 220V	455	3	YES	MAIRALI 02212538	ARIANNE - GIULIETTA - PALANCA
1	**1755109**	5000W 220V	660	4	NO	MAIRALI 02212637	ARIANNE - GIULIETTA - PALANCA

RESISTENZE MARCFI-ANCAS
HEATING ELEMENTS MARCFI-ANCAS
HEIZKÖRPER MARCFI-ANCAS
RESISTENCIAS MARCFI-ANCAS

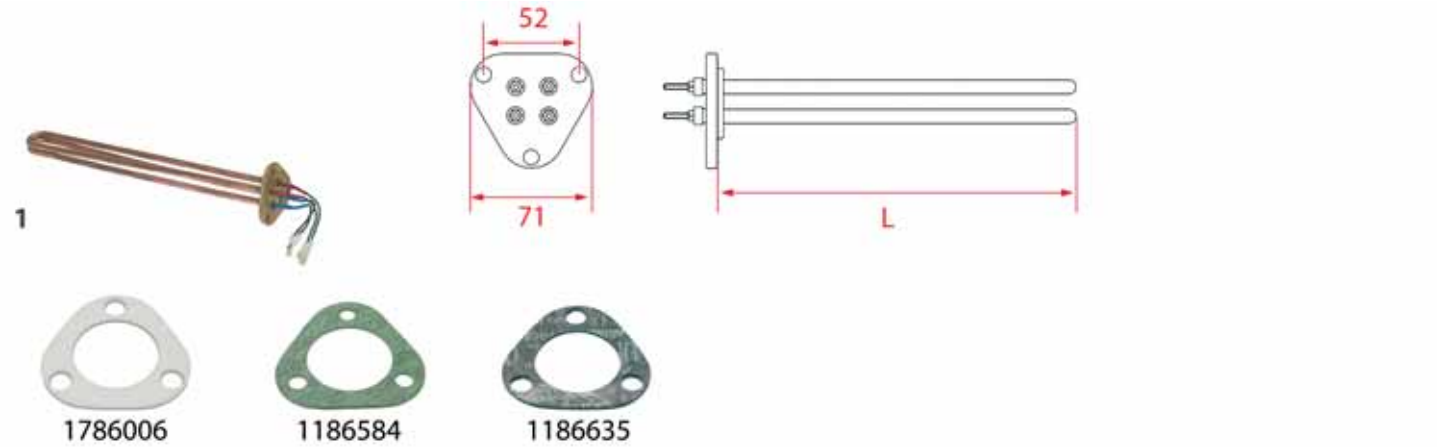

Photo	LF Code	Watt - Volt	L (mm)	Groups	Suitable for	For machine model
1	**1755091**	3000W 220V	360	2	MARCFI-ANCAS BM-20832	---
1	**1755092**	4000W 220V	470	3	MARCFI-ANCAS BM-20833	---

RESISTENZE MARZOCCO
HEATING ELEMENTS MARZOCCO
HEIZKÖRPER MARZOCCO
RESISTENCIAS MARZOCCO

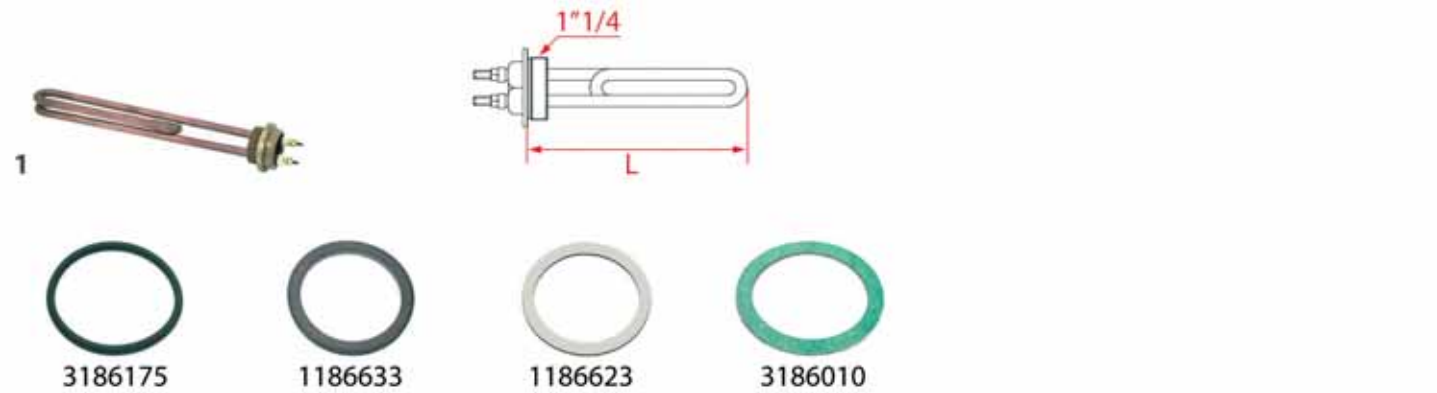

Photo	LF Code	Watt - Volt	L (mm)	Groups	Suitable for	For machine model
1	**1755099**	1000W 220V	210	1	MARZOCCO LR360/220	FB/70 - FB/80 - GB/5 - LINEA
1	**1755062**	1500W 230V	160	1	MARZOCCO LR340/220B	FB/70 - LINEA
1	**1755131**	1400W 230V	420	2	MARZOCCO LR365/220	FB/70 - FB/80 - GB/5 - LINEA
1	**1755133**	2000W 230V	290	2	MARZOCCO LR342/220B	FB/70 - FB/80 - GB/5 - LINEA
1	**5031155**	3000W 220V	390	2	MARZOCCO LR357/220B	FB/70 - FB/80 - GB/5 - LINEA
1	**1755132**	1600W 230V	650	3	MARZOCCO LR362/220	FB/70 - FB/80 - GB/5 - LINEA
1	**1755097**	3000W 220V	500	3	MARZOCCO LR345/220B	FB/70 - FB/80 - GB/5 - LINEA
1	**1755098**	3800W 220V	500	4	MARZOCCO LR346/220B	FB/70 - FB/80 - GB/5 - LINEA
1	**1755135**	4000W 220V	500	4	MARZOCCO LR356/220B	FB/70 - FB/80 - GB/5 - LINEA

RESISTENZE MARZOCCO
HEATING ELEMENTS MARZOCCO
HEIZKÖRPER MARZOCCO
RESISTENCIAS MARZOCCO

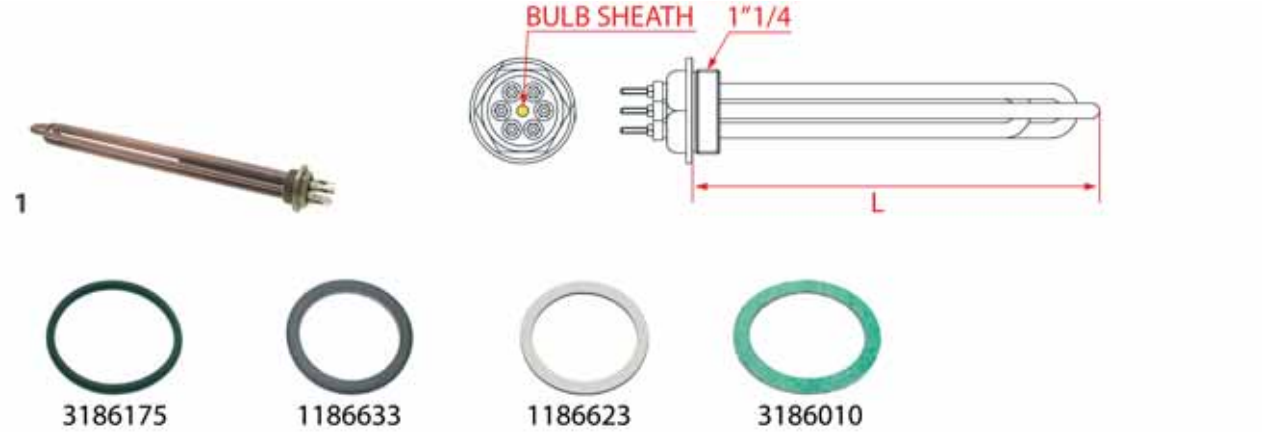

Photo	LF Code	Watt - Volt	L (mm)	Groups	Bulb sheath	Suitable for	For machine model
1	**1755061**	3000W 230/400V	390	2	YES	MARZOCCO LR357/220B	FB/70 - FB/80 - GB/5 - LINEA

RESISTENZE MARZOCCO
HEATING ELEMENTS MARZOCCO
HEIZKÖRPER MARZOCCO
RESISTENCIAS MARZOCCO

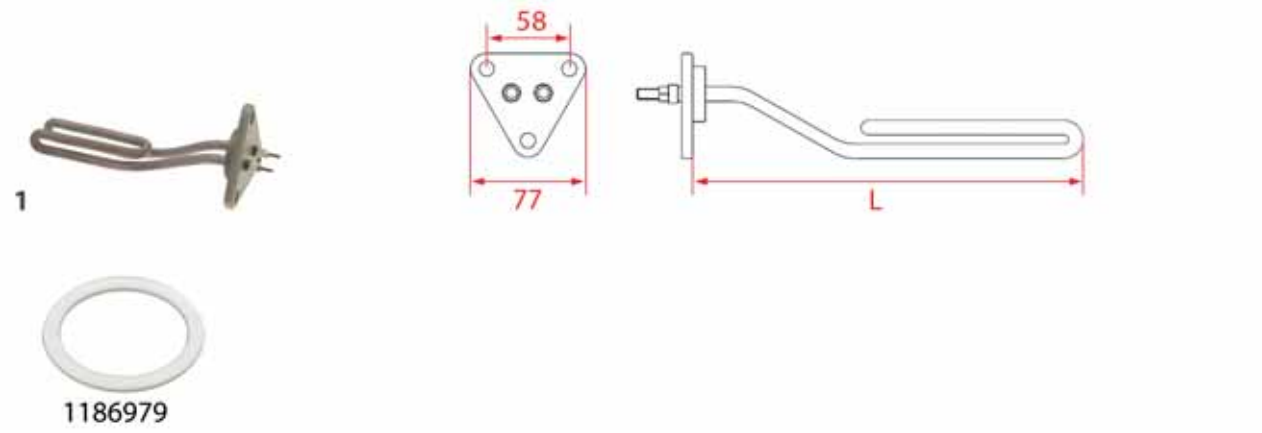

Photo	LF Code	Watt - Volt	L (mm)	Groups	Suitable for	For machine model
1	**1755100**	800W 220V	170	1	MARZOCCO E.6.004	GS/3

RESISTENZE MARZOCCO
HEATING ELEMENTS MARZOCCO
HEIZKÖRPER MARZOCCO
RESISTENCIAS MARZOCCO

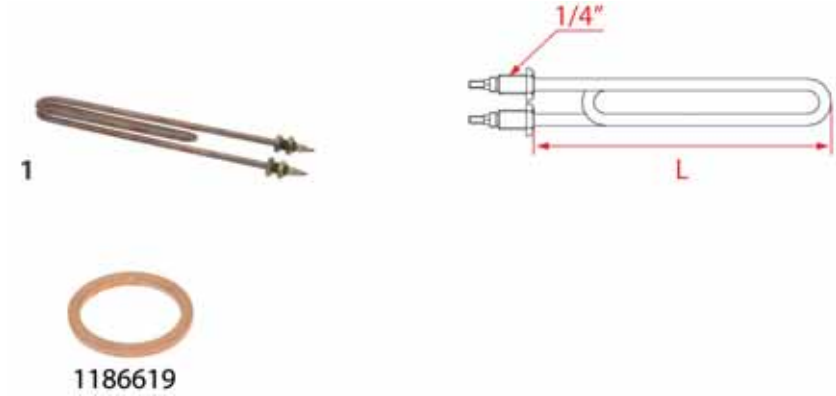

Photo	LF Code	Watt - Volt	L (mm)	Groups	Suitable for	For machine model
1	**1755113**	2000W 220V	280	2	MARZOCCO LR342/220	FB/70 - LINEA
1	**1755095**	3800W 220V	645	4	MARZOCCO LR346/220	FB/70 - LINEA

RESISTENZE MCE
HEATING ELEMENTS MCE
HEIZKÖRPER MCE
RESISTENCIAS MCE

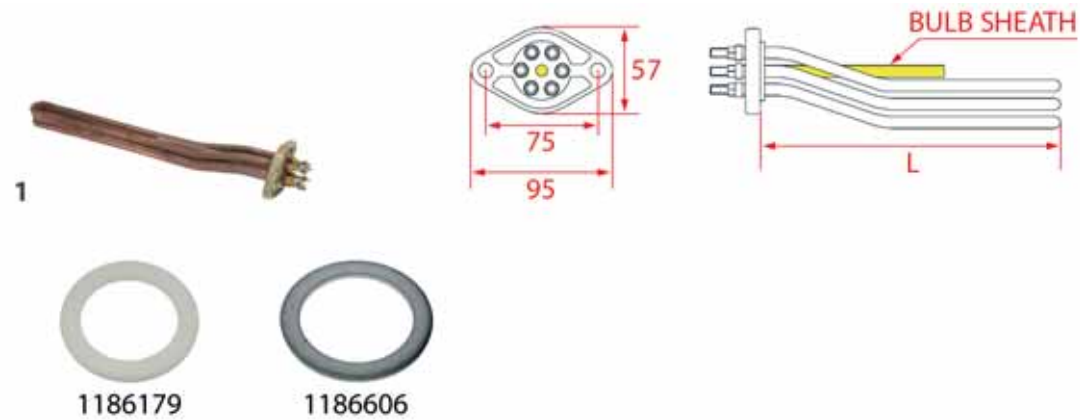

Photo	LF Code	Watt - Volt	L (mm)	Groups	Bulb sheath	Suitable for	For machine model
1	**1755608**	2700/2940W 230/240V	180	1	YES	MCE 17012	START
1	**1755258**	3400/3700W 230/240V	320	2	YES	MCE 17059	START
1	**1755259**	5000/5440W 230/240V	575	3	YES	MCE 17107	START

RESISTENZE NUOVA SIMONELLI
HEATING ELEMENTS NUOVA SIMONELLI
HEIZKÖRPER NUOVA SIMONELLI
RESISTENCIAS NUOVA SIMONELLI

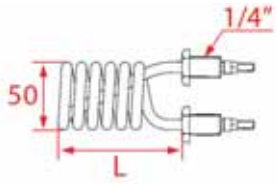

Photo	LF Code	Watt - Volt	L (mm)	Groups	Suitable for	For machine model
1	**1755023**	1000W 230V	65	1	NUOVA SIMONELLI 14100001	JAZZ - MIA - MICROBAR

RESISTENZE NUOVA SIMONELLI
HEATING ELEMENTS NUOVA SIMONELLI
HEIZKÖRPER NUOVA SIMONELLI
RESISTENCIAS NUOVA SIMONELLI

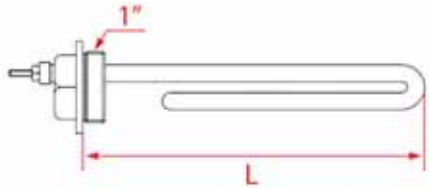

Photo	LF Code	Watt - Volt	L (mm)	Groups	Suitable for	For machine model
1	**1755033**	1200W 230V	160	1	NUOVA SIMONELLI 14100040	OSCAR
1	**1755667**	1200W 110V	155	1	NUOVA SIMONELLI 14100041	OSCAR
1	**1755029**	1800W 230V	190	1	NUOVA SIMONELLI 14100029	MASTER
1	**1755030**	2300W 230V	170	1	NUOVA SIMONELLI 14100038	MASTER

RESISTENZE NUOVA SIMONELLI
HEATING ELEMENTS NUOVA SIMONELLI
HEIZKÖRPER NUOVA SIMONELLI
RESISTENCIAS NUOVA SIMONELLI

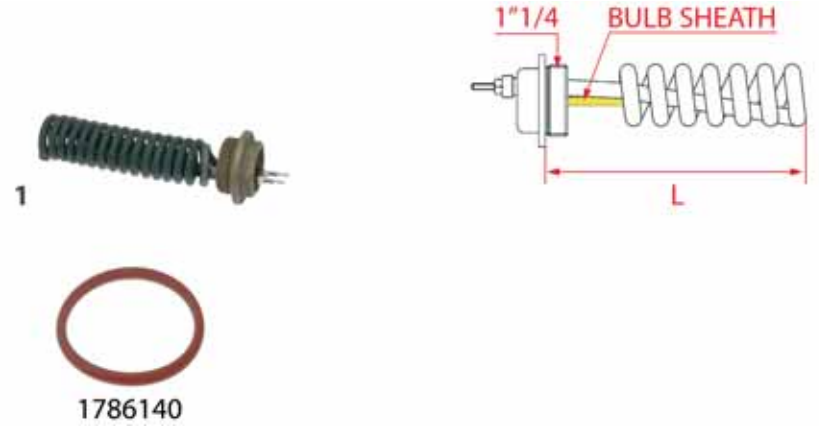

Photo	LF Code	Watt - Volt	L (mm)	Groups	Bulb sheath	Suitable for	For machine model
1	**1755111**	2600W 230V	155	1	YES	NUOVA SIMONELLI 14100050	APPIA COMPACT

RESISTENZE NUOVA SIMONELLI
HEATING ELEMENTS NUOVA SIMONELLI
HEIZKÖRPER NUOVA SIMONELLI
RESISTENCIAS NUOVA SIMONELLI

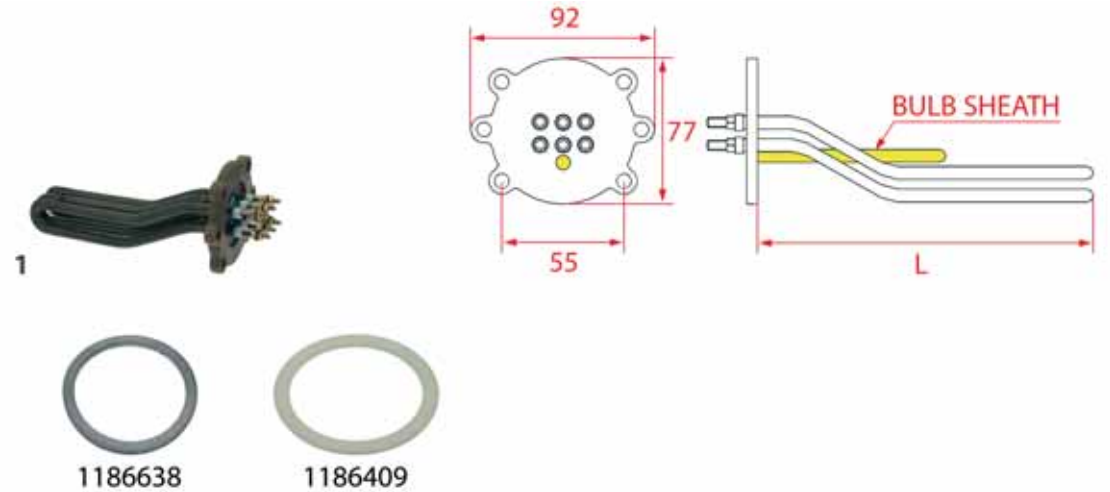

Photo	LF Code	Watt - Volt	L (mm)	Groups	Bulb sheath	Suitable for	For machine model
1	**1755078**	1800W 230V	160	1	NO	NUOVA SIMONELLI 14100084	APPIA
1	**1755140**	2700W 220V	185	2	NO	NUOVA SIMONELLI 14100027	PREMIER
1	**1755142**	3000W 220/380V	345	2	NO	NUOVA SIMONELLI 14100011	APPIA
1	**1755141**	4500W 220/380V	345	2	NO	NUOVA SIMONELLI 14100031	AURELIA - PREMIER
1	**1755143**	5000W 220V	575	3	NO	NUOVA SIMONELLI 14100012	APPIA - AURELIA

RESISTENZE NUOVA SIMONELLI
HEATING ELEMENTS NUOVA SIMONELLI
HEIZKÖRPER NUOVA SIMONELLI
RESISTENCIAS NUOVA SIMONELLI

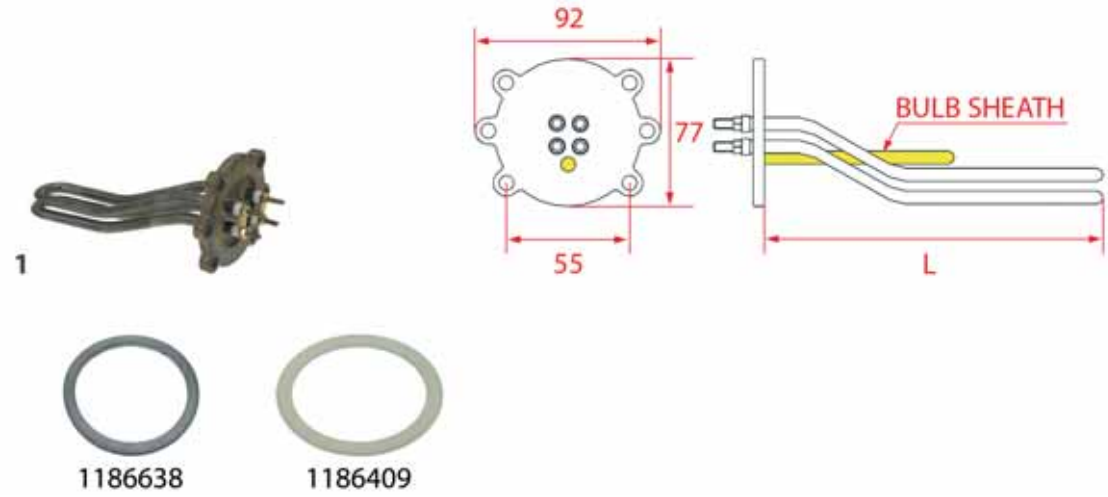

Photo	LF Code	Watt - Volt	L (mm)	Groups	Bulb sheath	Suitable for	For machine model
1	**1755666**	1500W 110V	160	1	NO	NUOVA SIMONELLI 14100086	APPIA

RESISTENZE ORCHESTRALE
HEATING ELEMENTS ORCHESTRALE
HEIZKÖRPER ORCHESTRALE
RESISTENCIAS ORCHESTRALE

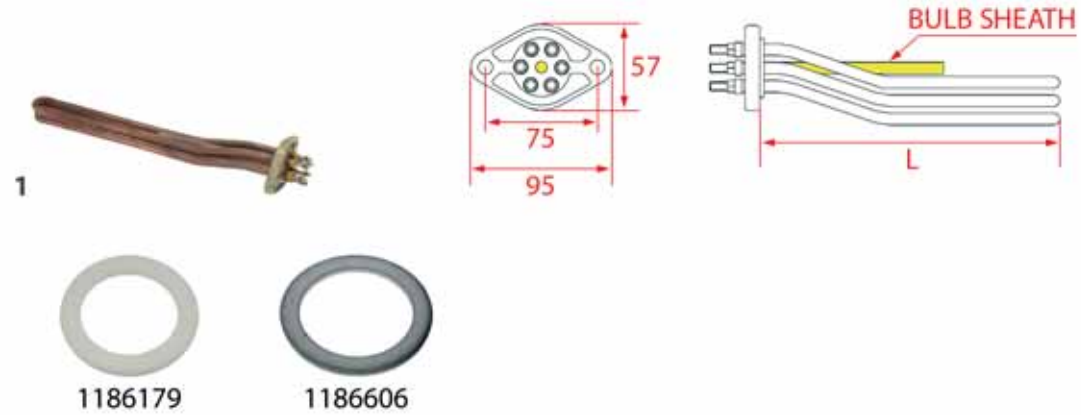

Photo	LF Code	Watt - Volt	L (mm)	Groups	Bulb sheath	Suitable for	For machine model
1	**1755608**	2700/2940W 230/240V	180	1	YES	ORCHESTRALE D17012	ETNICA - PHONICA
1	**1755273**	2700W 120V	170	1	NO	ORCHESTRALE D17016	ETNICA - PHONICA
1	**1755258**	3400/3700W 230/240V	320	2	YES	ORCHESTRALE D17059	ETNICA - PHONICA
1	**1755070**	4000W 230/240V	310	2	YES	ORCHESTRALE D17057	ETNICA - PHONICA
1	**1755259**	5000/5440W 230/240V	575	3	YES	ORCHESTRALE D17107	ETNICA - PHONICA

RESISTENZE ORCHESTRALE
HEATING ELEMENTS ORCHESTRALE
HEIZKÖRPER ORCHESTRALE
RESISTENCIAS ORCHESTRALE

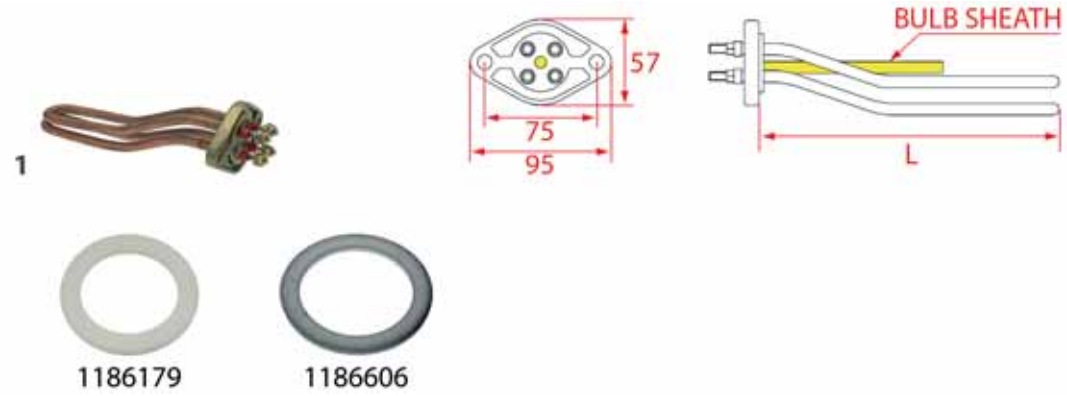

Photo	LF Code	Watt - Volt	L (mm)	Groups	Bulb sheath	Suitable for	For machine model
1	**1755605**	2600W 110V	320	2	YES	ORCHESTRALE D17050	ETNICA - PHONICA
1	**1755071**	5000W 230/240V	500	3	YES	ORCHESTRALE D17106	ETNICA - PHONICA
1	**1755606**	3700W 110V	580	3	NO	ORCHESTRALE D17100	ETNICA - PHONICA

RESISTENZE PAVONI
HEATING ELEMENTS PAVONI
HEIZKÖRPER PAVONI
RESISTENCIAS PAVONI

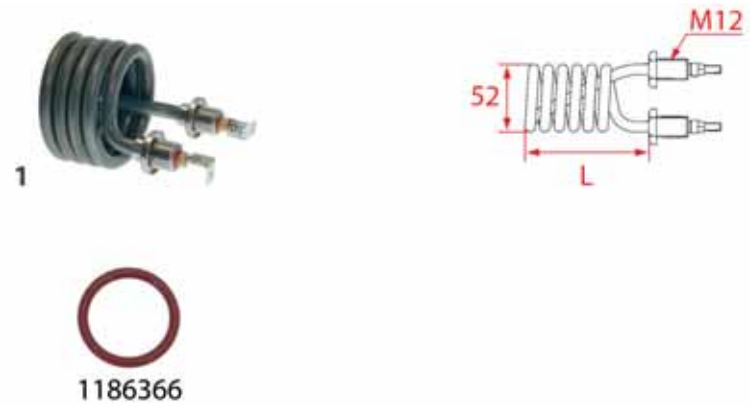

Photo	LF Code	Watt - Volt	L (mm)	Groups	Suitable for	For machine model
1	**5501288**	900W 230V	56	1	PAVONI 0P188150158	EURO BAR

RESISTENZE PAVONI
HEATING ELEMENTS PAVONI
HEIZKÖRPER PAVONI
RESISTENCIAS PAVONI

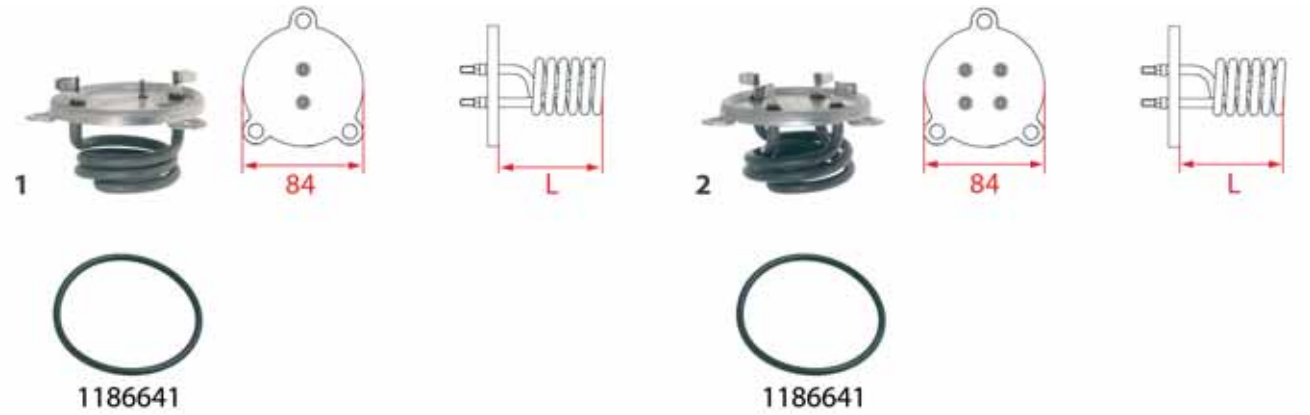

Photo	LF Code	Watt - Volt	L (mm)	Groups	Suitable for	For machine model
1	**1755050**	920/1000W 230/240V	46	1	PAVONI 331335	EUROPICCOLA - PROFESSIONAL - ROMANTICA - STRADIVARI
1	**1755166**	1000W 120V	46	1	PAVONI 331334	EUROPICCOLA - PROFESSIONAL - ROMANTICA - STRADIVARI
2	**1755059**	1120W 230V	50	1	PAVONI 331336	MIGNON
2	**1755167**	1200W 120V	45	1	PAVONI 331337	MIGNON

RESISTENZE PAVONI
HEATING ELEMENTS PAVONI
HEIZKÖRPER PAVONI
RESISTENCIAS PAVONI

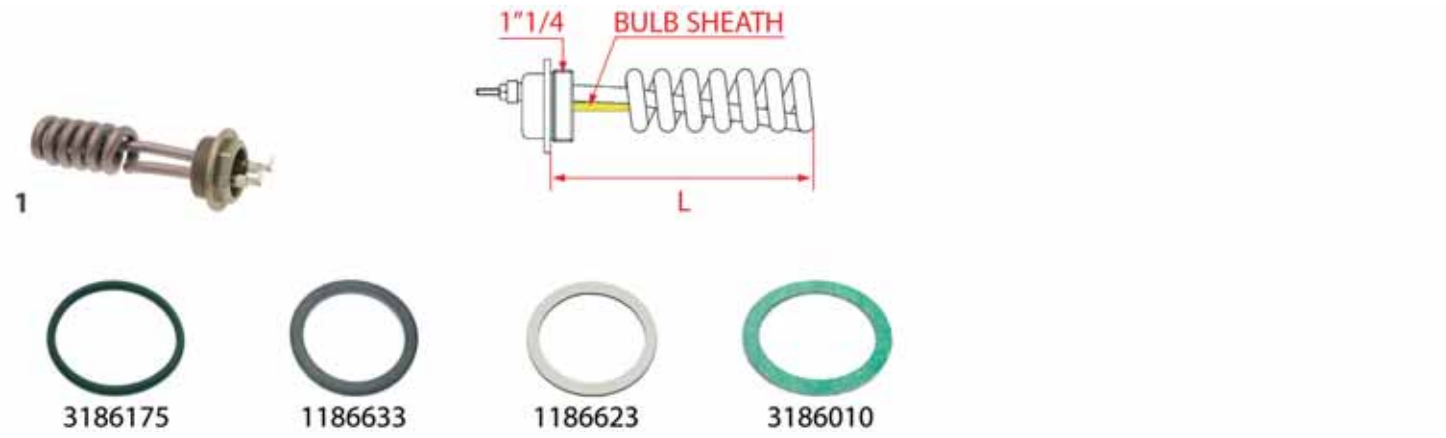

Photo	LF Code	Watt - Volt	L (mm)	Groups	Bulb sheath	Suitable for	For machine model
1	**1755062**	1500W 230V	160	1	NO	PAVONI 331145	PAB

RESISTENZE PAVONI
HEATING ELEMENTS PAVONI
HEIZKÖRPER PAVONI
RESISTENCIAS PAVONI

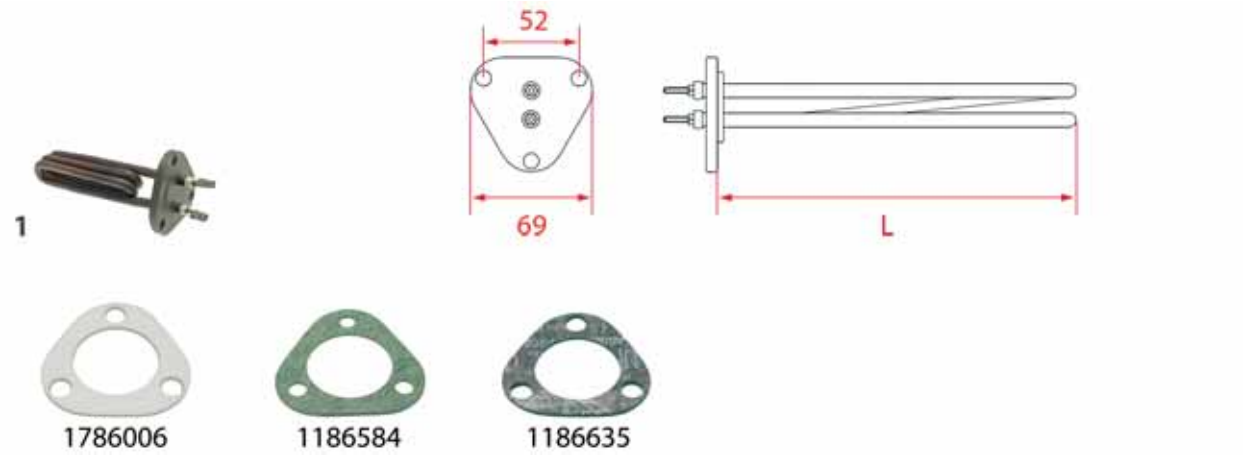

Photo	LF Code	Watt - Volt	L (mm)	Groups	Suitable for	For machine model
1	**1755054**	1500W 230V	130	1	PAVONI 331112	CAFE - PUB
1	**1755771**	1500W 110V	125	1	PAVONI 331121	CAFE - PUB

RESISTENZE PAVONI
HEATING ELEMENTS PAVONI
HEIZKÖRPER PAVONI
RESISTENCIAS PAVONI

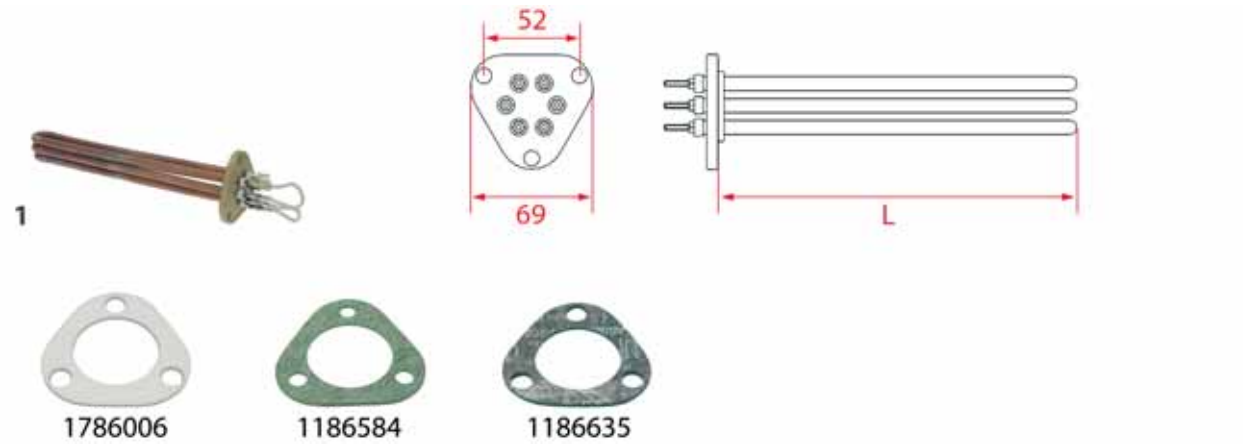

Photo	LF Code	Watt - Volt	L (mm)	Groups	Suitable for	For machine model
1	**1755163**	3000W 230/380V	237	2	PAVONI 331113	CAFE - PUB
1	**1755772**	2000W 110V	240	2	PAVONI 331119	CAFE - PUB

RESISTENZE PAVONI
HEATING ELEMENTS PAVONI
HEIZKÖRPER PAVONI
RESISTENCIAS PAVONI

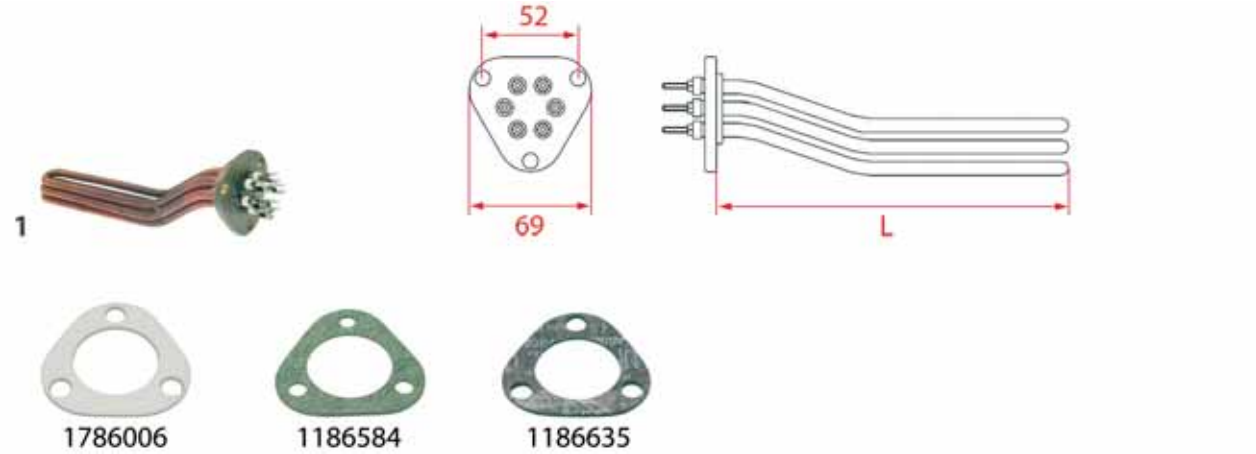

Photo	LF Code	Watt - Volt	L (mm)	Groups	Suitable for	For machine model
1	**1755161**	3000W 230/380V	240	2	PAVONI 331120	PUNO - PTRE - P90
1	**1755162**	4000W 220/380V	285	3	PAVONI 331129	PUNO - PTRE - P90

RESISTENZE PAVONI
HEATING ELEMENTS PAVONI
HEIZKÖRPER PAVONI
RESISTENCIAS PAVONI

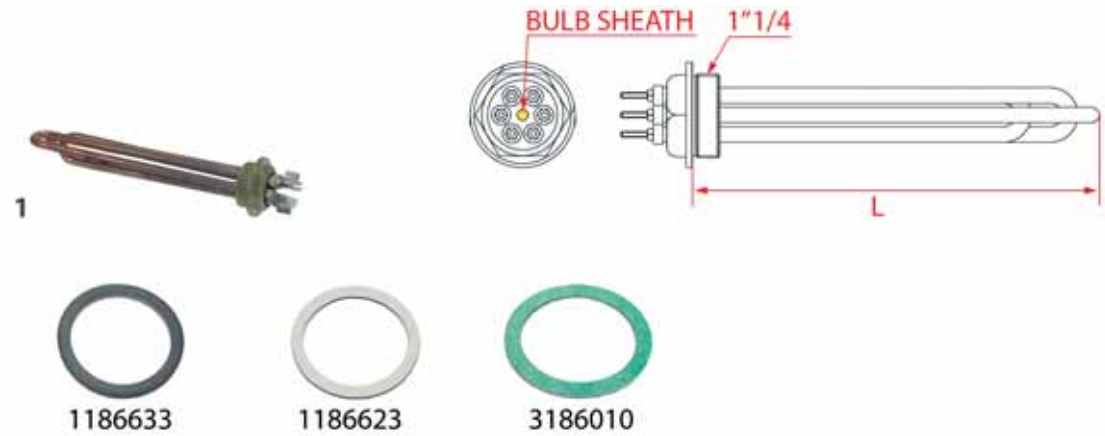

Photo	LF Code	Watt - Volt	L (mm)	Groups	Bulb sheath	Suitable for	For machine model
1	**3455332**	3000W 220/380V	230	2	NO	PAVONI 331106	BART
1	**5500269**	4500W 220/380V	280	3	NO	PAVONI 331107	BART

RESISTENZE PAVONI
HEATING ELEMENTS PAVONI
HEIZKÖRPER PAVONI
RESISTENCIAS PAVONI

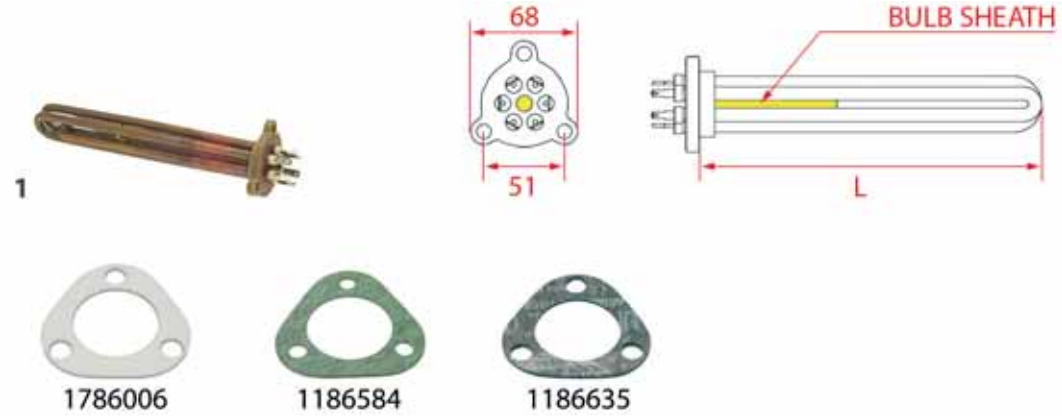

Photo	LF Code	Watt - Volt	L (mm)	Groups	Bulb sheath	Suitable for	For machine model
1	**1755055**	2630/3130W 220/240V	235	2	YES	PAVONI 331160	BAR - CAFE - HOTEL
1	**1755056**	4000/4760W 220/240V	310	2	YES	PAVONI 331153	BAR - CAFE - HOTEL
1	**1755057**	5455/5950W 230/240V	400	3	YES	PAVONI 331154	BAR - CAFE - HOTEL
1	**1755271**	6000/7140W 220/240V	490	3	YES	PAVONI 331115	BAR - CAFE - HOTEL

RESISTENZE PROMAC
HEATING ELEMENTS PROMAC
HEIZKÖRPER PROMAC
RESISTENCIAS PROMAC

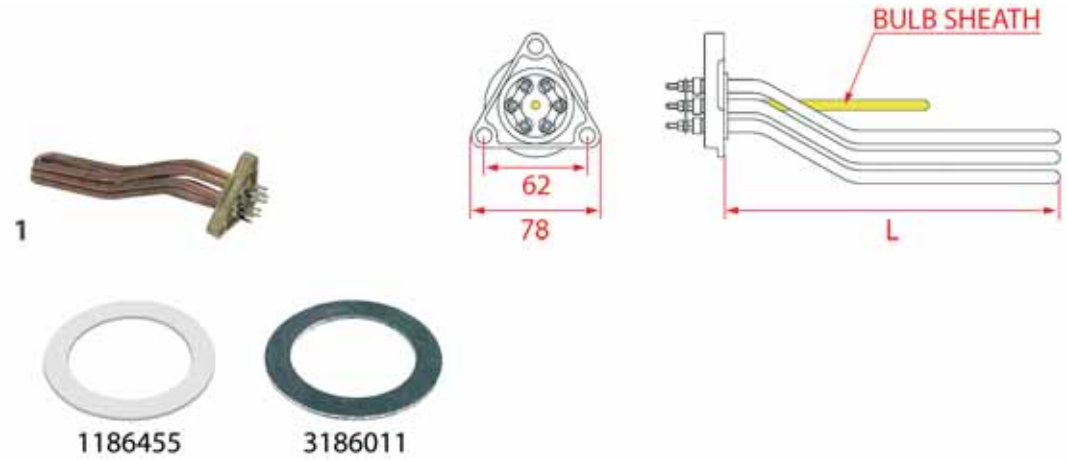

Photo	LF Code	Watt - Volt	L (mm)	Groups	Bulb sheath	Suitable for	For machine model
1	**1755182**	3000W 220/380V	230	2	YES	PROMAC 33323300	GREEN - COMPACT
1	**1755048**	4300W 230/400V	375	3	YES	PROMAC 33323430	GREEN - COMPACT
1	**1755049**	6000W 230V	400	4	YES	PROMAC 33323600	GREEN - COMPACT

RESISTENZE PROMAC
HEATING ELEMENTS PROMAC
HEIZKÖRPER PROMAC
RESISTENCIAS PROMAC

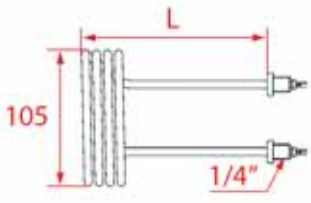

Photo	LF Code	Watt - Volt	L (mm)	Groups	Suitable for	For machine model
1	**1755801**	1700W 230V	190	1	PROMAC 33122017	CLUB

RESISTENZE RANCILIO
HEATING ELEMENTS RANCILIO
HEIZKÖRPER RANCILIO
RESISTENCIAS RANCILIO

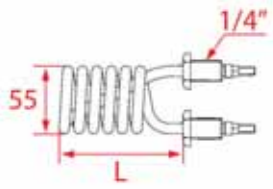

Photo	LF Code	Watt - Volt	L (mm)	Groups	Suitable for	For machine model
1	**1755046**	1100W 230V	60	1	RANCILIO 33122014	SILVIA - NANCY - AUNDREY - BETSY - FANTASY

RESISTENZE RANCILIO
HEATING ELEMENTS RANCILIO
HEIZKÖRPER RANCILIO
RESISTENCIAS RANCILIO

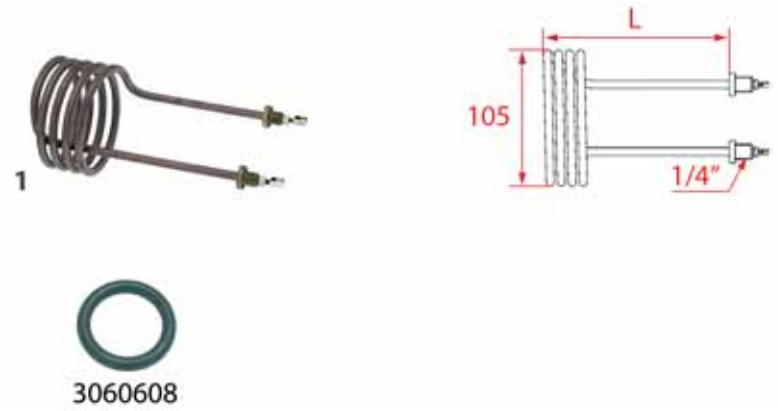

Photo	LF Code	Watt - Volt	L (mm)	Groups	Suitable for	For machine model
1	**1755801**	1700W 230V	190	1	RANCILIO 33122017	S20 - EPOCA

RESISTENZE RANCILIO
HEATING ELEMENTS RANCILIO
HEIZKÖRPER RANCILIO
RESISTENCIAS RANCILIO

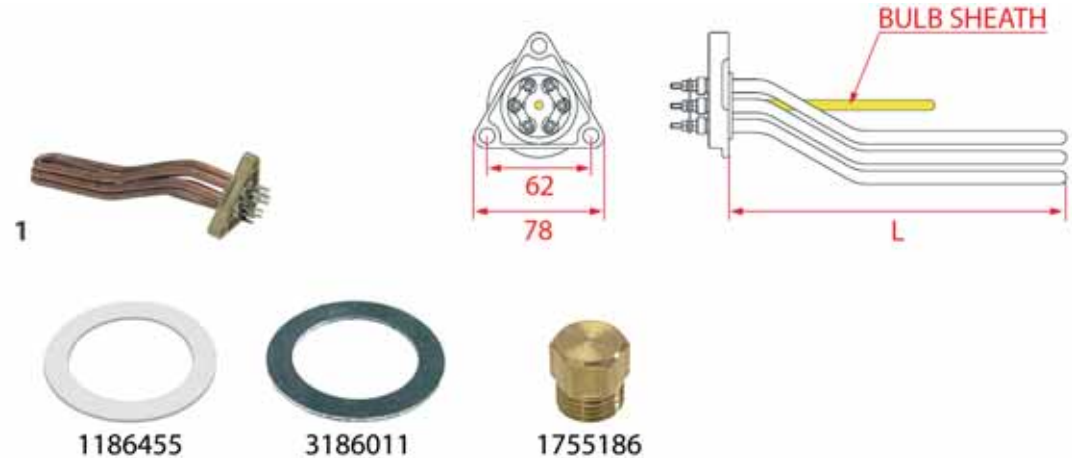

Photo	LF Code	Watt - Volt	L (mm)	Groups	Bulb sheath	Suitable for	For machine model
1	**3355453**	2100W 220V	210	1	M10	RANCILIO 33322022	S20
1	**1755182**	3000W 220/380V	230	2	YES	RANCILIO 33323300	CLASSE10 - CLASSE6 - CLASSE6 LEVA - CLASSE7 - CLASSE8
1	**1755777**	2700W 110V	235	2	M10	RANCILIO 33311028	EPOCA - MILLENNIUM - S20 - Z11
1	**3355454**	3900W 220V	390	3	M10	RANCILIO 33322040	Z11 - S20 - MILLENNIUM
1	**1755048**	4300W 230/400V	375	3	YES	RANCILIO 33323430	CLASSE10 - CLASSE6 - CLASSE6 LEVA - CLASSE7 - CLASSE8
1	**3355455**	4500W 220V	390	4	NO	RANCILIO 33322046	S20
1	**1755183**	6000W 230/380V	395	4	M10	RANCILIO 33322065	MILLENIUM - Z11
1	**1755049**	6000W 230V	400	4	YES	RANCILIO 33323600	CLASSE10 - CLASSE6 - CLASSE6 LEVA - CLASSE8 - CLASSE9

RESISTENZE RENEKA
HEATING ELEMENTS RENEKA
HEIZKÖRPER RENEKA
RESISTENCIAS RENEKA

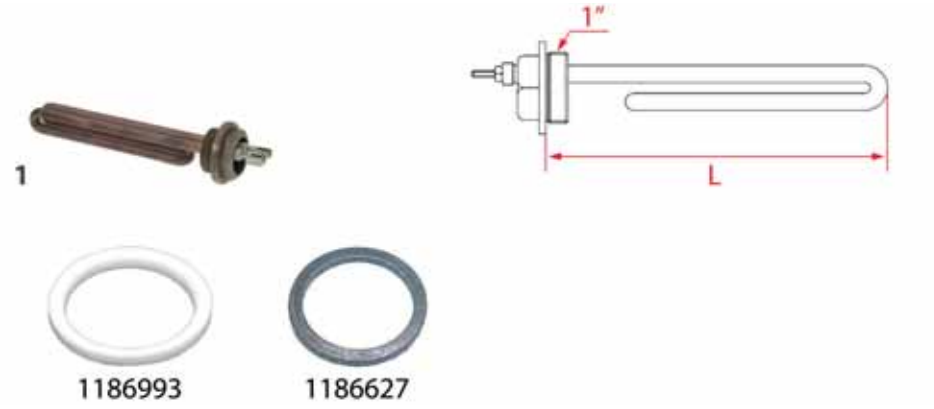

Photo	LF Code	Watt - Volt	L (mm)	Groups	Suitable for	For machine model
1	**1755623**	1250/1450W 220/240V	160	1	RENEKA 5722240	AMICI

RESISTENZE RENEKA
HEATING ELEMENTS RENEKA
HEIZKÖRPER RENEKA
RESISTENCIAS RENEKA

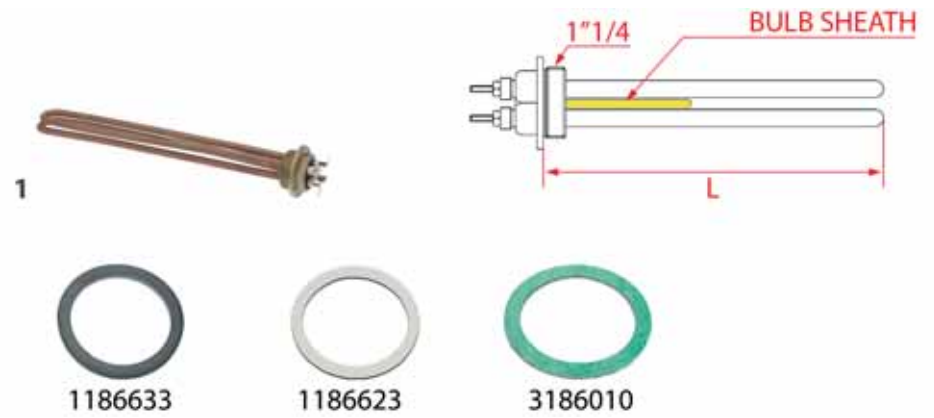

Photo	LF Code	Watt - Volt	L (mm)	Groups	Bulb sheath	Suitable for	For machine model
1	**1755214**	3100W 230V	325	2	YES	RENEKA 9215366	MOSAIC

RESISTENZE RENEKA
HEATING ELEMENTS RENEKA
HEIZKÖRPER RENEKA
RESISTENCIAS RENEKA

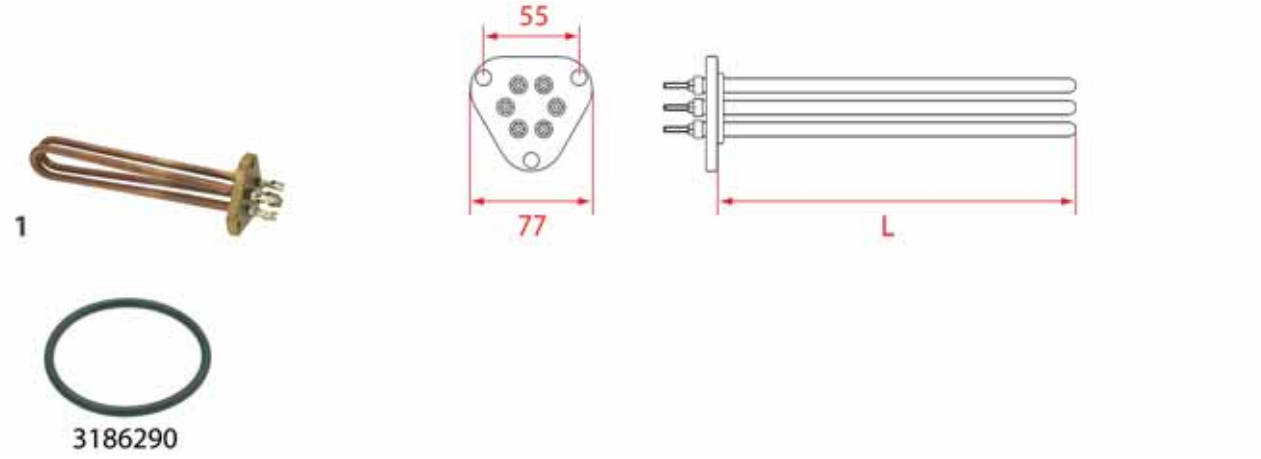

Photo	LF Code	Watt - Volt	L (mm)	Groups	Suitable for	For machine model
1	**1455025**	2100W 220V	175	1	RENEKA 9005365	LC - VIVA - VIVAE - VIVAS - XL - XLPALLAS
1	**1455027**	3800W 220V	330	2	RENEKA 9005367	PLUS - PRESTIGE - VIVA - VIVAE - VIVAS - XL - XLPALLAS
1	**1455024**	4000W 230V	550	3	RENEKA 9505354	LC - PLUS - PRESTIGE - VIVA - VIVAE - VIVAS - XL

RESISTENZE ROYAL
HEATING ELEMENTS ROYAL
HEIZKÖRPER ROYAL
RESISTENCIAS ROYAL

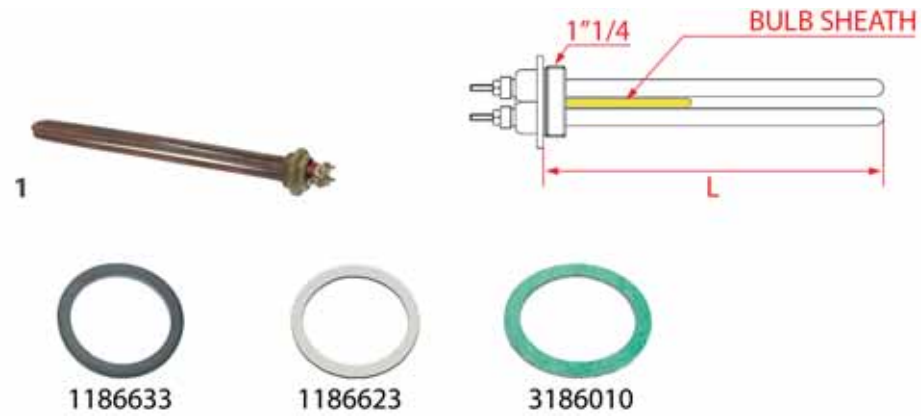

Photo	LF Code	Watt - Volt	L (mm)	Groups	Bulb sheath	Suitable for	For machine model
1	**1755208**	3300W 230V	370	2	YES	ROYAL 5050220	---
1	**1755209**	4000W 230V	495	3	YES	ROYAL 5050230	---

RESISTENZE ROYAL
HEATING ELEMENTS ROYAL
HEIZKÖRPER ROYAL
RESISTENCIAS ROYAL

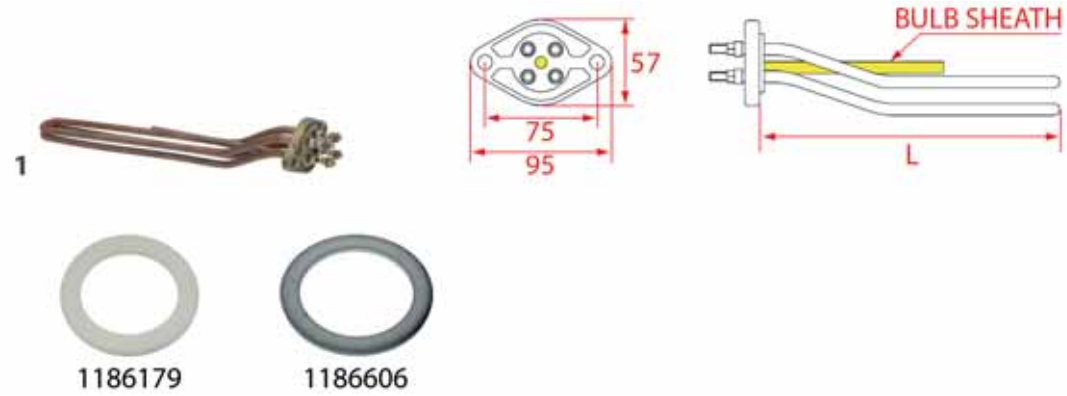

Photo	LF Code	Watt - Volt	L (mm)	Groups	Bulb sheath	Suitable for	For machine model
1	**1755210**	3500W 230V	340	2	YES	ROYAL 5050720	DIADEMA - SYNCHRO
1	**1755211**	5200W 230V	510	3	YES	ROYAL 5050730	DIADEMA - SYNCHRO

RESISTENZE SAB ITALIA
HEATING ELEMENTS SAB ITALIA
HEIZKÖRPER SAB ITALIA
RESISTENCIAS SAB ITALIA

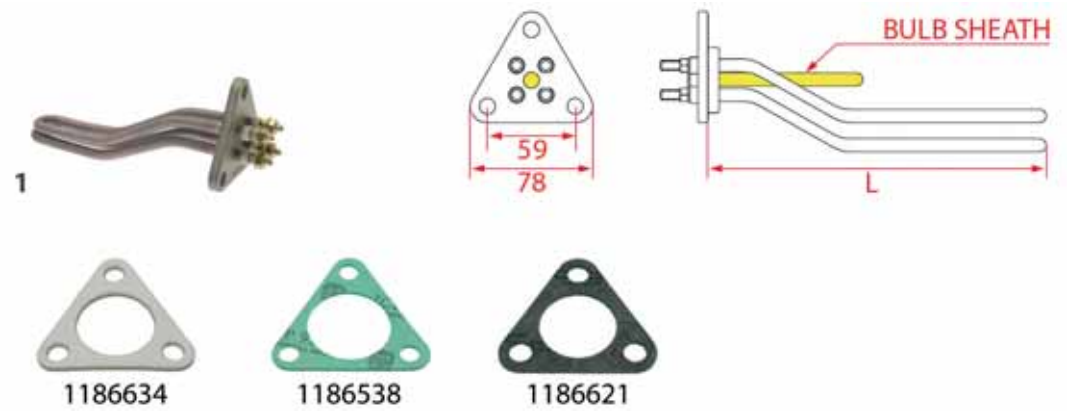

Photo	LF Code	Watt - Volt	L (mm)	Groups	Bulb sheath	Suitable for	For machine model
1	**1755330**	1800W 230V	170	1	NO	SAB ITALIA SV1GR002	E96 - MODERNA
1	**1755331**	3000W 230V	335	2	NO	SAB ITALIA SV2GR003	ELLIPSE - E96 - JOLLY - MODERNA
1	**1755632**	3000W 115V	350	2	NO	SAB ITALIA	ELLIPSE - E96 - JOLLY - MODERNA
1	**1755213**	5000W 230V	500	3	NO	SAB ITALIA SV3GR002	ELLIPSE - E96 - JOLLY - MODERNA

RESISTENZE SAECO
HEATING ELEMENTS SAECO
HEIZKÖRPER SAECO
RESISTENCIAS SAECO

Photo	LF Code	Watt - Volt	L (mm)	Groups	Suitable for	For machine model
1	**1755130**	1000W 230V	---	1	SAECO 288140458	CAFECREMA - CAFENOVA - INCANTO - TREVI
2	**1755826**	80W 240V	ø 12x55	1-2-3-4	SAECO WGADM2125/01	AROMA
3	**5501288**	900W 230V	56	1	SAECO 188150358	ARMONIA - AROMA - ESPRESSODREAM - GRANCREMA - IDEA
3	**1755298**	900W 230V	50	1	SAECO 11024000	POEMIA

RESISTENZE SAECO
HEATING ELEMENTS SAECO
HEIZKÖRPER SAECO
RESISTENCIAS SAECO

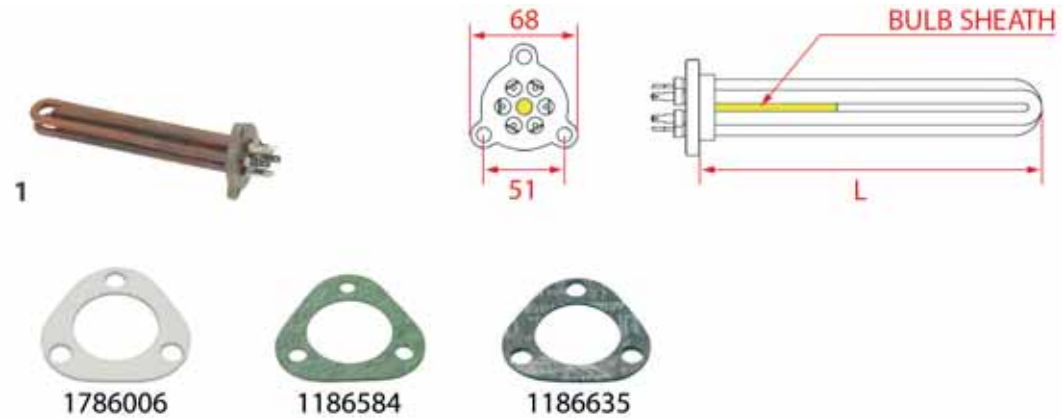

Photo	LF Code	Watt - Volt	L (mm)	Groups	Bulb sheath	Suitable for	For machine model
1	**1755008**	2500W 220/380V	220	2	YES	SAECO ES9190.271.00A	AROMA COMPACT
1	**1755056**	4000/4760W 220/240V	310	2	YES	SAECO 11003362	AROMA
1	**1755057**	5455/5950W 230/240V	400	3	YES	SAECO 11003363	AROMA

RESISTENZE SAECO
HEATING ELEMENTS SAECO
HEIZKÖRPER SAECO
RESISTENCIAS SAECO

1

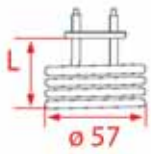

Photo	LF Code	Watt - Volt	L (mm)	Groups	Suitable for	For machine model
1	**1755302**	1000W 230V	58	1	SAECO 11001002	NINA

RESISTENZE SAN MARCO
HEATING ELEMENTS SAN MARCO
HEIZKÖRPER SAN MARCO
RESISTENCIAS SAN MARCO

1

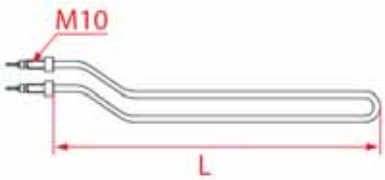

Photo	LF Code	Watt - Volt	L (mm)	Groups	Suitable for	For machine model
1	**1755196**	1000W 220V	205	1	SAN MARCO	OLD MODELS - MODELLI VECCHI
1	**1755197**	1300W 220V	380	2	SAN MARCO	OLD MODELS - MODELLI VECCHI
1	**1755198**	1850W 220V	515	3	SAN MARCO	OLD MODELS - MODELLI VECCHI

RESISTENZE SAN MARCO
HEATING ELEMENTS SAN MARCO
HEIZKÖRPER SAN MARCO
RESISTENCIAS SAN MARCO

1

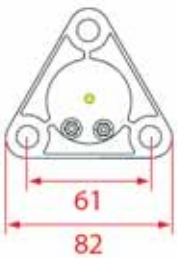

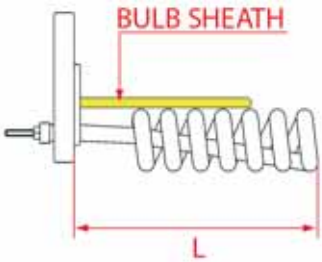

1186637

Photo	LF Code	Watt - Volt	L (mm)	Groups	Bulb sheath	Suitable for	For machine model
1	**1755203**	1750W 220V	125	1	NO	SAN MARCO 108245	85 PRACTICALE - 85 PRACTICALS
1	**1755781**	1750W 110V	120	1	NO	SAN MARCO 108245A	85 PRACTICALE - 85 PRACTICALS

RESISTENZE SAN MARCO
HEATING ELEMENTS SAN MARCO
HEIZKÖRPER SAN MARCO
RESISTENCIAS SAN MARCO

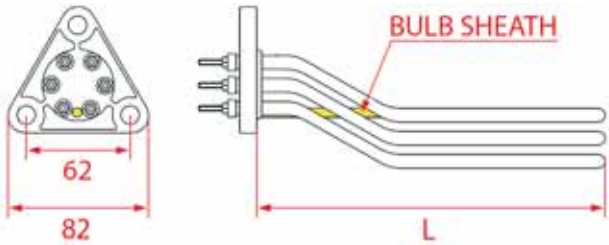

Photo	LF Code	Watt - Volt	L (mm)	Groups	Bulb sheath	Suitable for	For machine model
1	**1755201**	3000W 230/400V	375	2-4	YES	SAN MARCO 108143	LEVA - NEW 105 - 100 - 105 - 85 - 95
1	**1755126**	3500W 230/400V	375	2-4	YES	SAN MARCO 108630	LEVA - NEW 105 - 100 - 105 - 85 - 95
1	**1755202**	4500W 230V	545	3	YES	SAN MARCO 108141	LEVA - NEW 105 - 100 - 105 - 85 - 95
1	**1755106**	5500W 230/400V	560	3	YES	SAN MARCO 108632	LEVA - NEW 105 - 100 - 105 - 85 - 95

RESISTENZE SAN MARCO
HEATING ELEMENTS SAN MARCO
HEIZKÖRPER SAN MARCO
RESISTENCIAS SAN MARCO

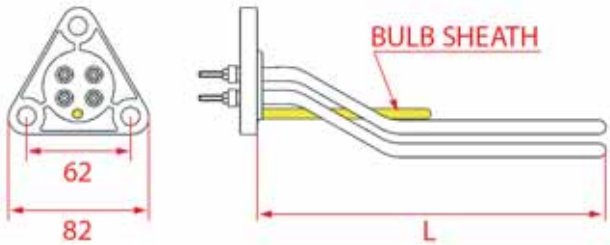

Photo	LF Code	Watt - Volt	L (mm)	Groups	Bulb sheath	Suitable for	For machine model
1	**1755114**	3000W 230V	375	2-4	YES	SAN MARCO 108461	LEVA - NEW 105 - 100 - 105 - 85 - 95
1	**1755105**	4000W 230V	550	3	YES	SAN MARCO 108462	LEVA - NEW 105 - 100 - 105 - 85 - 95

RESISTENZE SAN MARCO
HEATING ELEMENTS SAN MARCO
HEIZKÖRPER SAN MARCO
RESISTENCIAS SAN MARCO

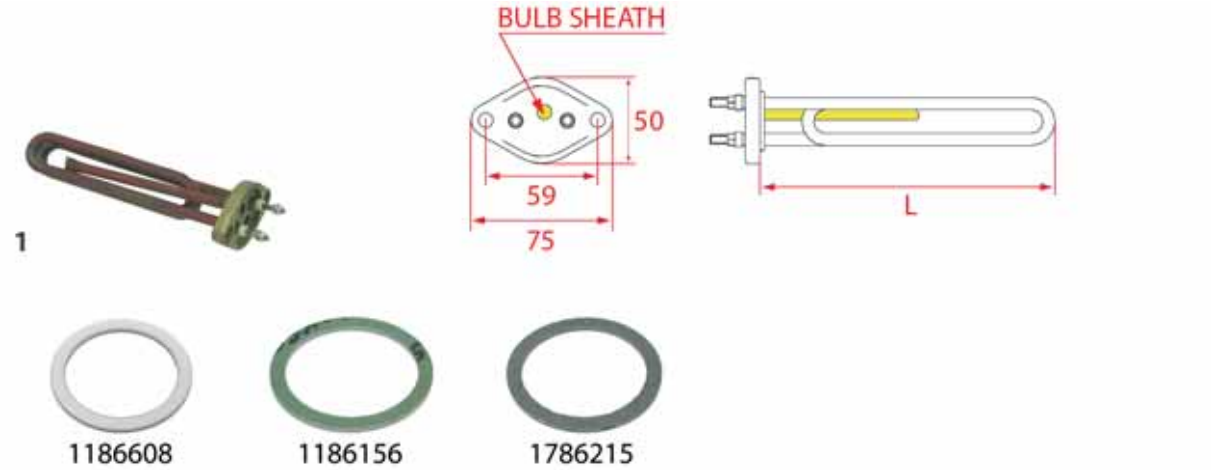

Photo	LF Code	Watt - Volt	L (mm)	Groups	Bulb sheath	Suitable for	For machine model
1	**1755784**	2000W 230V	180	1	YES	SAN MARCO 108414B	100 PRACTICALE - 100 PRACTICALS - 105 - 95 PRACTICALE

RESISTENZE SAN MARCO
HEATING ELEMENTS SAN MARCO
HEIZKÖRPER SAN MARCO
RESISTENCIAS SAN MARCO

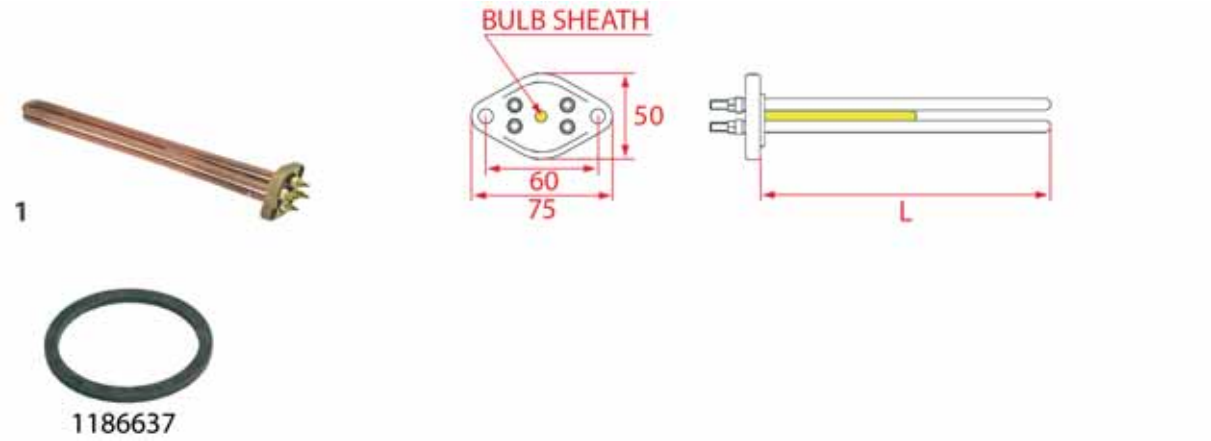

Photo	LF Code	Watt - Volt	L (mm)	Groups	Bulb sheath	Suitable for	For machine model
1	**1755785**	3000W 230V	335	2	YES	SAN MARCO 108350	100SPRINT - 105COMPACT - 85SPRINT - 95SPRINT

RESISTENZE SAN MARCO
HEATING ELEMENTS SAN MARCO
HEIZKÖRPER SAN MARCO
RESISTENCIAS SAN MARCO

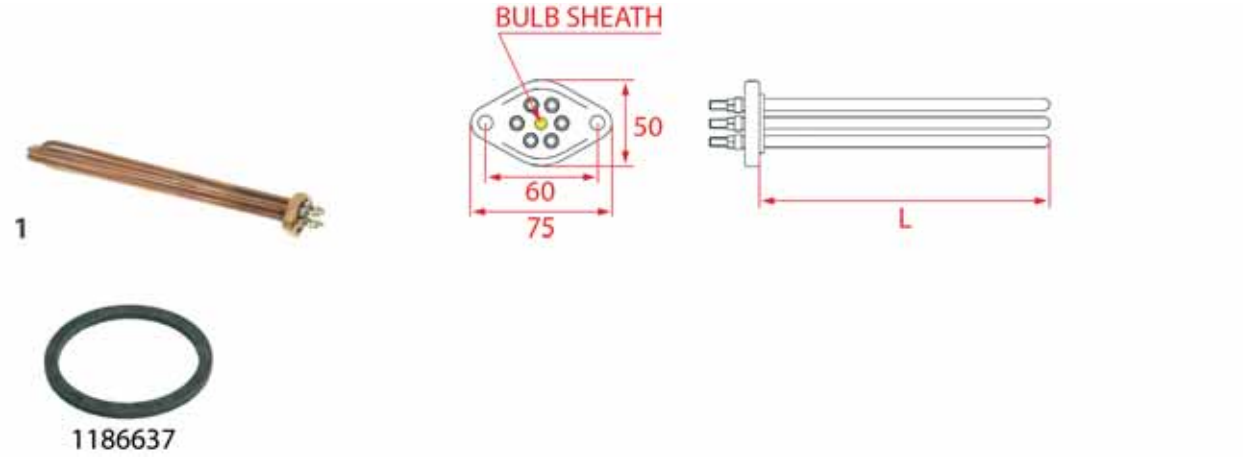

Photo	LF Code	Watt - Volt	L (mm)	Groups	Bulb sheath	Suitable for	For machine model
1	**1755783**	4500W 230/400V	330	2	NO	SAN MARCO 108351	100SPRINT - 105COMPACT - 85SPRINT - 95SPRINT

RESISTENZE SANREMO
HEATING ELEMENTS SANREMO
HEIZKÖRPER SANREMO
RESISTENCIAS SANREMO

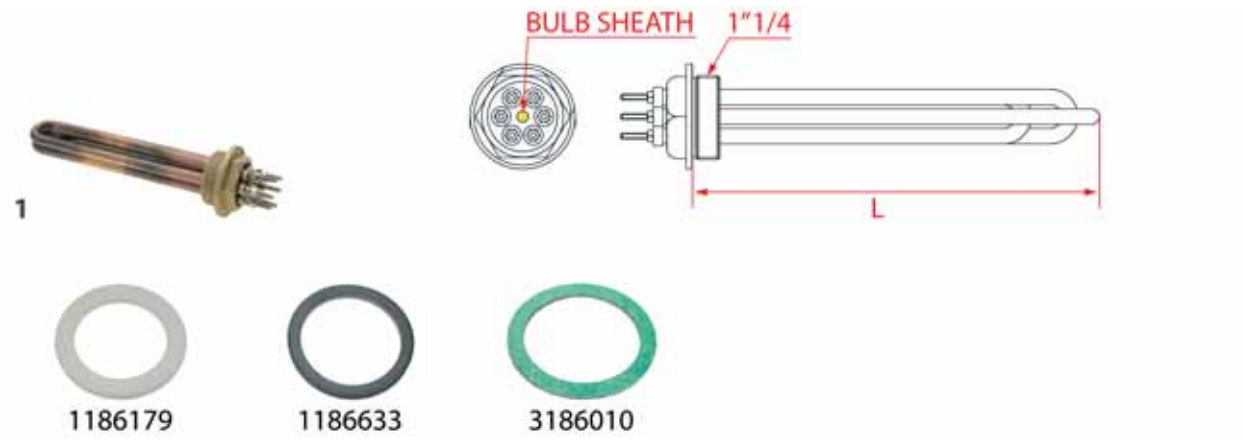

Photo	LF Code	Watt - Volt	L (mm)	Groups	Bulb sheath	Suitable for	For machine model
1	**5056509**	1950W 230V	175	1	YES	SANREMO 10455050	CAPRI - MILANO LX - VENEZIA - ZOE
1	**5019887**	2400W 380V	170	1	YES	SANREMO 10455060	CAPRI - ZOE
1	**5021939**	2700W 380V	325	2	YES	SANREMO 10455052	AMALFI - CAPRI - MILANO LX - PISA - TORINO - VENEZIA
1	**1455065**	4500W 380V	325	2	YES	SANREMO 10455080	AMALFI - CAPRI - MILANO LX - PISA - TORINO - VENEZIA
1	**1455066**	5100W 380V	460	3	YES	SANREMO 10455054	MILANO LX - PISA - TORINO - VENEZIA - VERONA - ZOE

RESISTENZE SCALA
HEATING ELEMENTS SCALA
HEIZKÖRPER SCALA
RESISTENCIAS SCALA

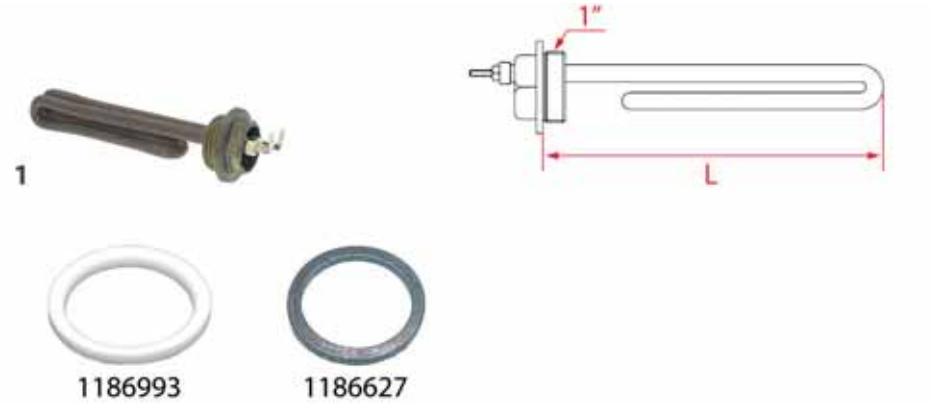

Photo	LF Code	Watt - Volt	L (mm)	Groups	Suitable for	For machine model
1	**1755348**	1350W 220V	130	1	SCALA C-0520	BUTTERFLY
1	**1755637**	1400W 110V	130	1	SCALA C-0520/120	BUTTERFLY

RESISTENZE SCALA
HEATING ELEMENTS SCALA
HEIZKÖRPER SCALA
RESISTENCIAS SCALA

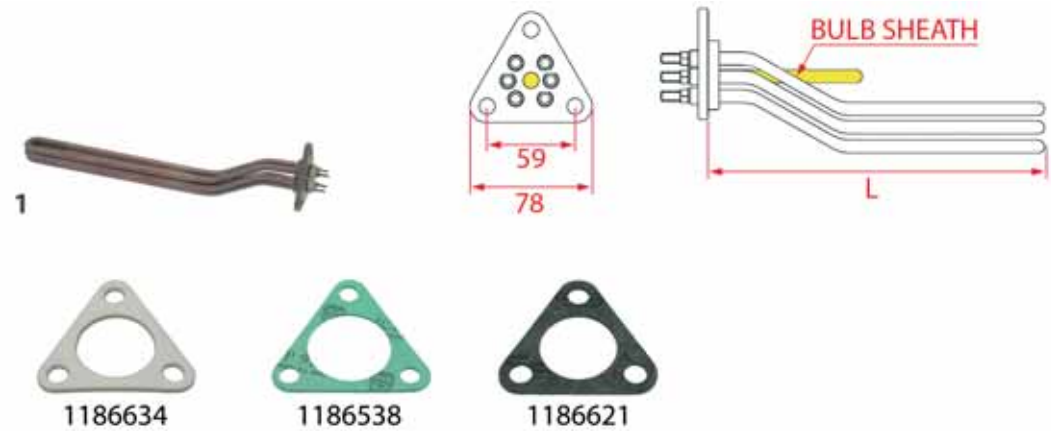

Photo	LF Code	Watt - Volt	L (mm)	Groups	Bulb sheath	Suitable for	For machine model
1	**1755040**	2200W 230V	135	1	YES	SCALA C-0353	CARMEN
1	**5053881**	2500W 230V	185	2	YES	SCALA C-0527	EROICA
1	**1755041**	3500W 230V	340	2	YES	SCALA C-0356	CARMEN - IRIS - NORMA
1	**1755045**	4500W 230V	540	3	YES	SCALA C-0358	CARMEN - IRIS

RESISTENZE SPAZIALE
HEATING ELEMENTS SPAZIALE
HEIZKÖRPER SPAZIALE
RESISTENCIAS SPAZIALE

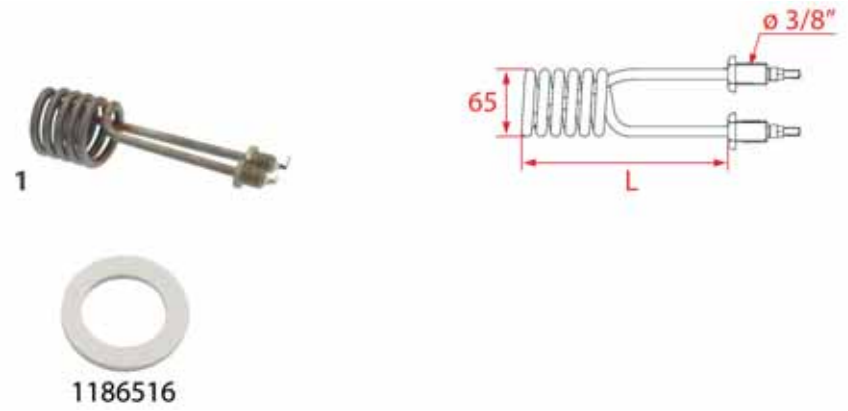

Photo	LF Code	Watt - Volt	L (mm)	Groups	Suitable for	For machine model
1	**1755086**	1250W 220V	195	1	SPAZIALE 07478	S1 - VIVALDI

RESISTENZE SPAZIALE
HEATING ELEMENTS SPAZIALE
HEIZKÖRPER SPAZIALE
RESISTENCIAS SPAZIALE

Photo	LF Code	Watt - Volt	L (mm)	Groups	Suitable for	For machine model
1	**1755226**	2700W 220V	190	1	SPAZIALE 00425	RAPID - SPAZIO - S5 COMPACT

RESISTENZE SPAZIALE
HEATING ELEMENTS SPAZIALE
HEIZKÖRPER SPAZIALE
RESISTENCIAS SPAZIALE

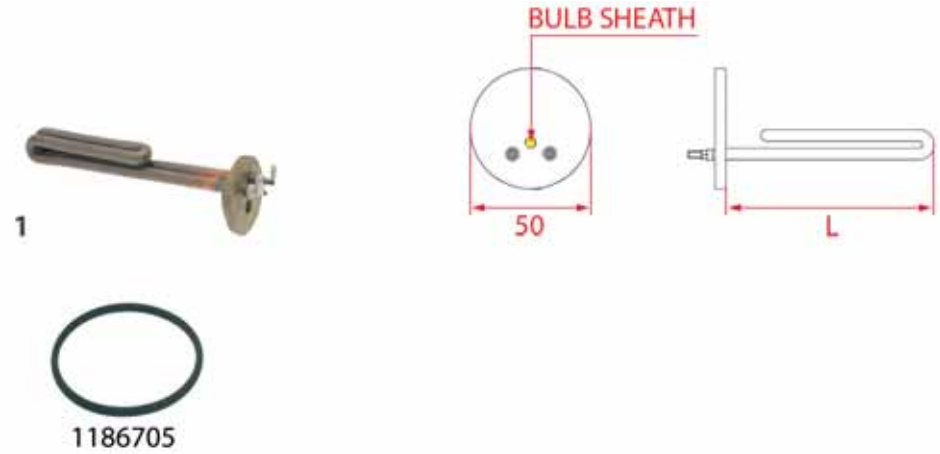

Photo	LF Code	Watt - Volt	L (mm)	Groups	Bulb sheath	Suitable for	For machine model
1	**1755081**	800W 230V	155	1	YES	SPAZIALE 07356	S1 - VIVALDI

RESISTENZE SPAZIALE
HEATING ELEMENTS SPAZIALE
HEIZKÖRPER SPAZIALE
RESISTENCIAS SPAZIALE

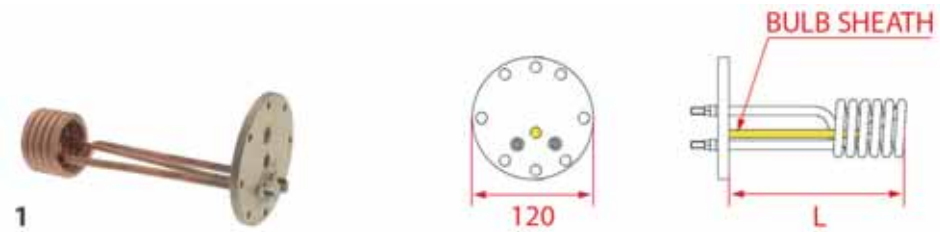

Photo	LF Code	Watt - Volt	L (mm)	Groups	Bulb sheath	Suitable for	For machine model
1	**1755084**	2000W 220V	250	1	YES	SPAZIALE 02541	NEW

RESISTENZE SPAZIALE
HEATING ELEMENTS SPAZIALE
HEIZKÖRPER SPAZIALE
RESISTENCIAS SPAZIALE

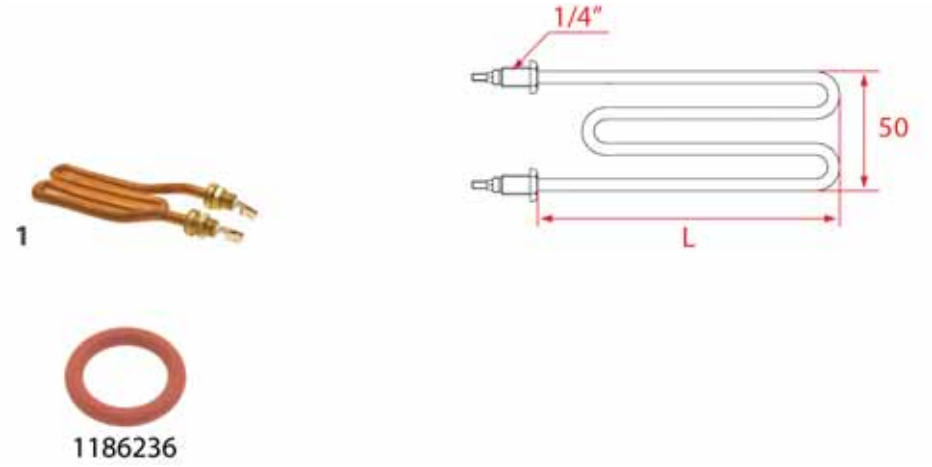

Photo	LF Code	Watt - Volt	L (mm)	Groups	Suitable for	For machine model
1	**1755701**	1250W 220V	138	1	SPAZIALE 00806	PROFESSIONALE

RESISTENZE SPAZIALE
HEATING ELEMENTS SPAZIALE
HEIZKÖRPER SPAZIALE
RESISTENCIAS SPAZIALE

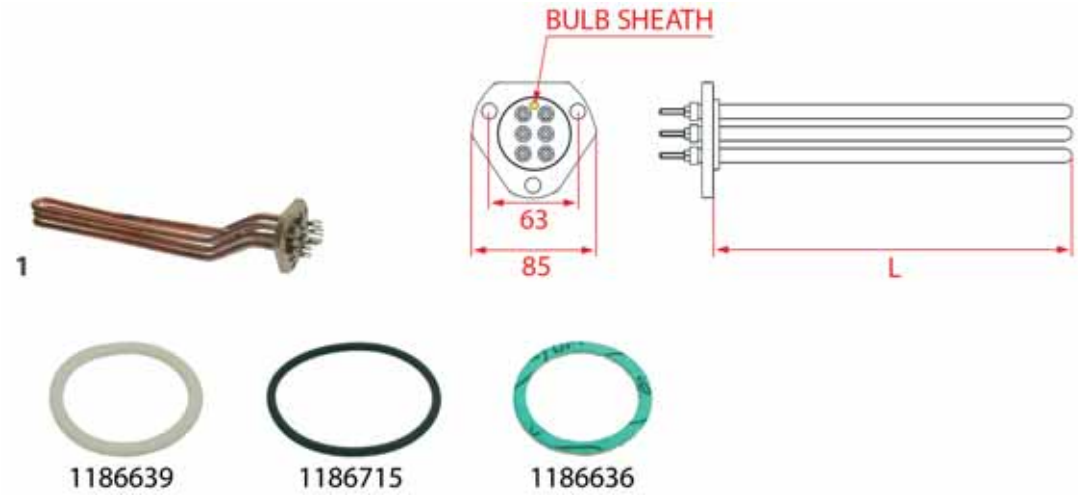

Photo	LF Code	Watt - Volt	L (mm)	Groups	Bulb sheath	Suitable for	For machine model
1	**1755221**	2800W 220/380V	355	2	YES	SPAZIALE	NEW - SELETRON PLUS - SUPER 3000 - S3 - S40 - S5
1	**1755087**	2800W 230V	345	2	YES	SPAZIALE 05504	NEW - SELETRON PLUS - SUPER 3000 - S3 - S40 - S5
1	**1755080**	3500W 230V	345	2	YES	SPAZIALE 01724	NEW - SELETRON PLUS - SUPER 3000 - S3 - S40 - S5
1	**1755090**	4800W 220V	340 NICKEL	2	YES	SPAZIALE 07820	S5 COMPACT
1	**1755222**	3800W 220/380V	570	3	YES	SPAZIALE	NEW - SELETRON PLUS - SUPER 3000 - S3 - S40 - S5
1	**1755093**	3800W 230V	545	3	YES	SPAZIALE 05505	NEW - SELETRON PLUS - SUPER 3000 - S3 - S40 - S5
1	**1755094**	4800W 230V	545 NICKEL	3	YES	SPAZIALE 02231	S5 COMPACT
1	**1755085**	5800W 230V	560	3-4	YES	SPAZIALE 05806	NEW - SELETRON PLUS - SUPER 3000 - S3 - S40 - S5

RESISTENZE SPINEL
HEATING ELEMENTS SPINEL
HEIZKÖRPER SPINEL
RESISTENCIAS SPINEL

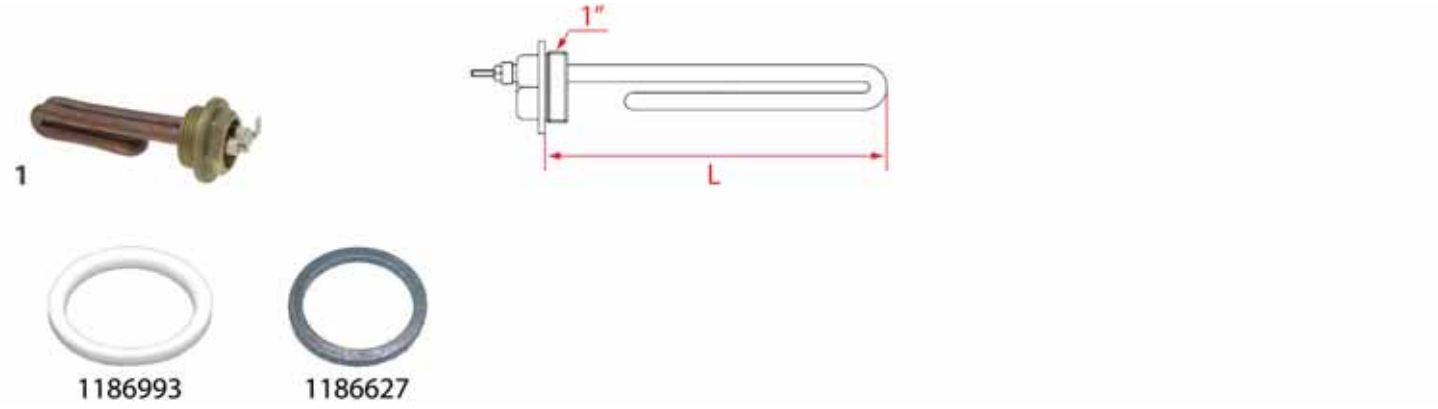

Photo	LF Code	Watt - Volt	L (mm)	Groups	Suitable for	For machine model
1	**1755276**	800W 220V	100	1	SPINEL SR.000.072.004	ESSELUX - MINIMINILUX - UNOLUX

RESISTENZE SPINEL
HEATING ELEMENTS SPINEL
HEIZKÖRPER SPINEL
RESISTENCIAS SPINEL

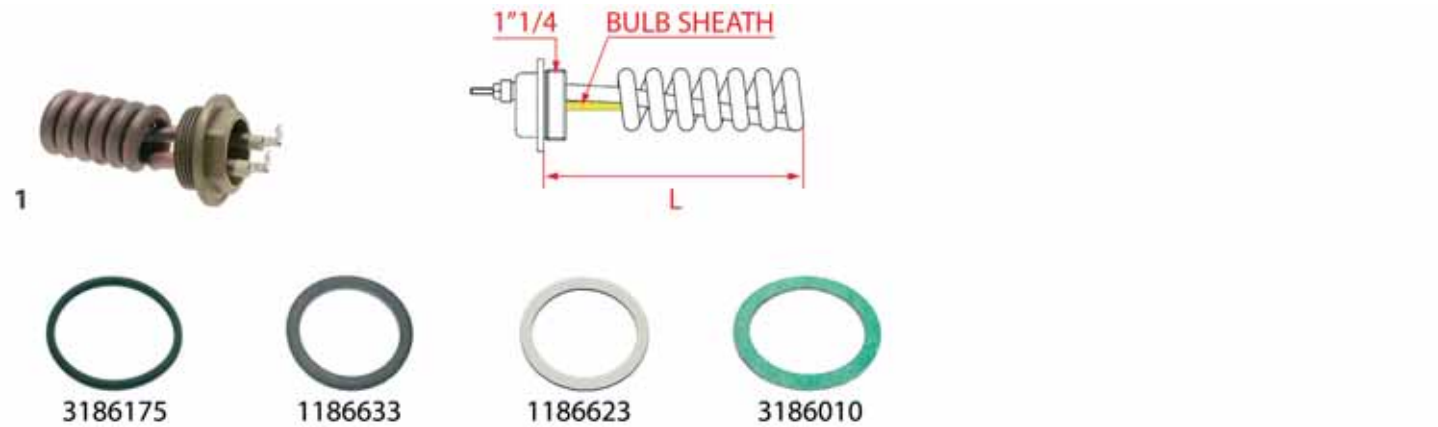

Photo	LF Code	Watt - Volt	L (mm)	Groups	Bulb sheath	Suitable for	For machine model
1	**1755603**	1300W 230V	105	1-2-3	NO	SPINEL SR.000.072.003	DUELUX - DUETTOLUX - RONDOLUX - TRELUX
1	**1755607**	1200W 110V	100	1-2-3	NO	SPINEL SR.000.072.009	DUELUX - DUETTOLUX - RONDOLUX - TRELUX

RESISTENZE UNIC
HEATING ELEMENTS UNIC
HEIZKÖRPER UNIC
RESISTENCIAS UNIC

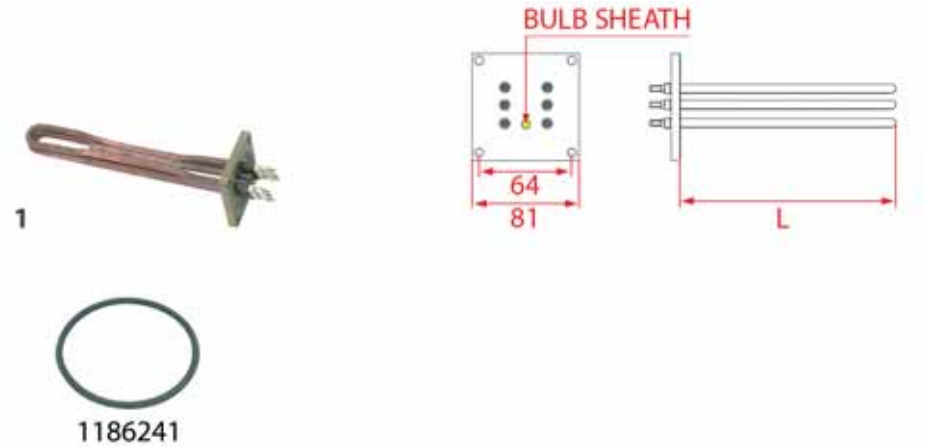

Photo	LF Code	Watt - Volt	L (mm)	Groups	Bulb sheath	Suitable for	For machine model
1	**1755396**	2730W 230/400V	235	2	YES	UNIC 29811	---
1	**1755397**	4000W 230V	280	2	NO	UNIC 29812	---

RESISTENZE VFA
HEATING ELEMENTS VFA
HEIZKÖRPER VFA
RESISTENCIAS VFA

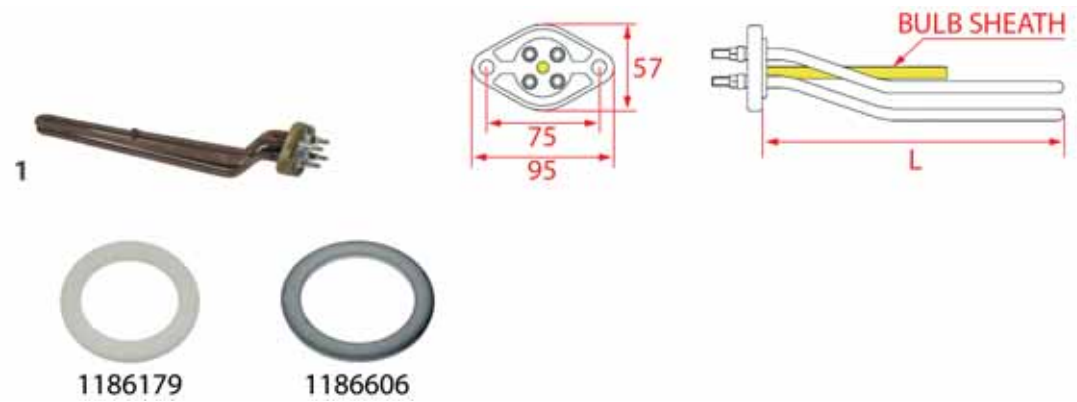

Photo	LF Code	Watt - Volt	L (mm)	Groups	Bulb sheath	Suitable for	For machine model
1	**1755102**	1800W 220V	240	1	NO	VFA	---
1	**1755107**	2600W 220V	325	2	YES	VFA	---
1	**1755108**	3700W 220V	455	3	YES	VFA	---

RESISTENZE VIBIEMME
HEATING ELEMENTS VIBIEMME
HEIZKÖRPER VIBIEMME
RESISTENCIAS VIBIEMME

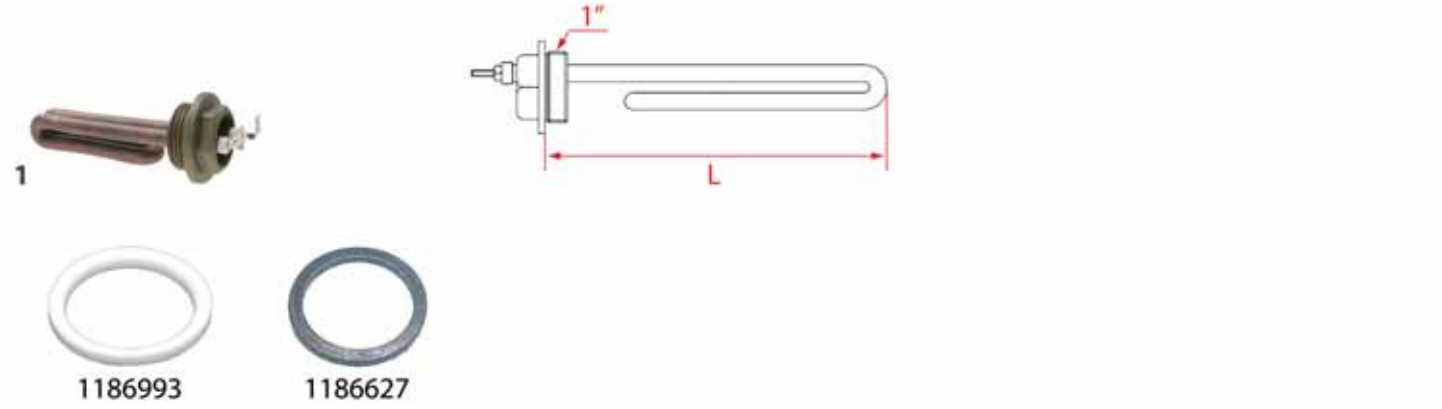

Photo	LF Code	Watt - Volt	L (mm)	Groups	Suitable for	For machine model
1	**1755281**	600W 230V	95	1	VIBIEMME ELETRESD60230	DOMOBARJUNIOR
1	**1755284**	800W 230V	130	1	VIBIEMME ELETRESD80022	CHIMAERA - DOMOBARSUPER - REPLICA
1	**1755278**	1200W 230V	95	1	VIBIEMME ELETRESD12230	DOMOBARJUNIOR - DOMOBARSUPER
1	**1755348**	1350W 220V	130	1	VIBIEMME ELETRESD1422	DOMOBAR
1	**1755637**	1400W 110V	130	1	VIBIEMME ELETRESD1411	DOMOBAR

RESISTENZE VIBIEMME
HEATING ELEMENTS VIBIEMME
HEIZKÖRPER VIBIEMME
RESISTENCIAS VIBIEMME

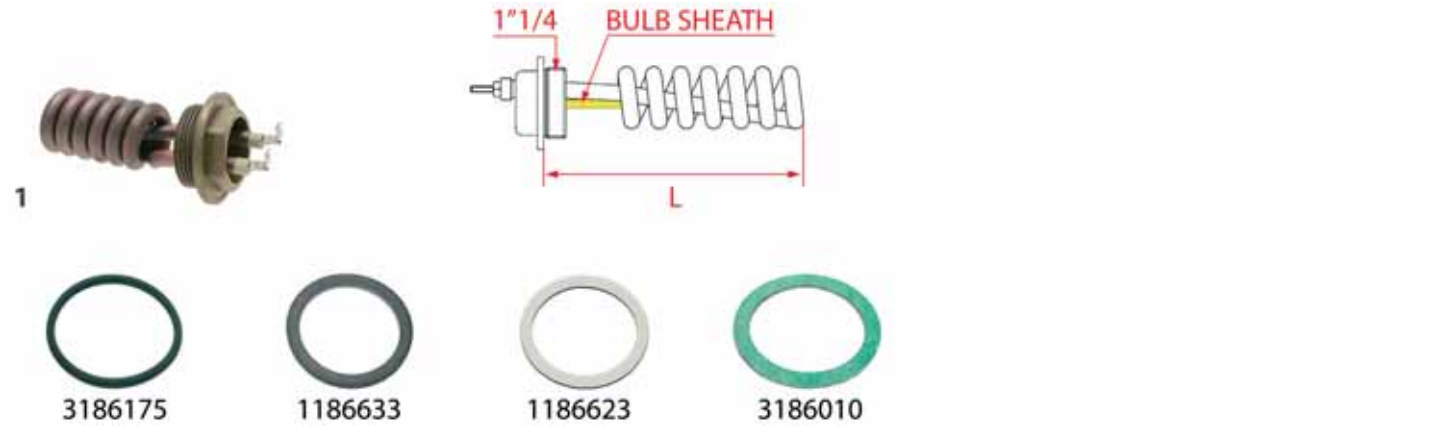

Photo	LF Code	Watt - Volt	L (mm)	Groups	Bulb sheath	Suitable for	For machine model
1	**1755285**	1600W 230V	95	1	NO	VIBIEMME ELETRESD1625	DOMOBARJUNIOR
1	**1755279**	1800W 230V	140	1	NO	VIBIEMME ELETRESSM1822	DOMOBARSUPER - DOSAPLUS - KOMETA - LOLLO

RESISTENZE VIBIEMME
HEATING ELEMENTS VIBIEMME
HEIZKÖRPER VIBIEMME
RESISTENCIAS VIBIEMME

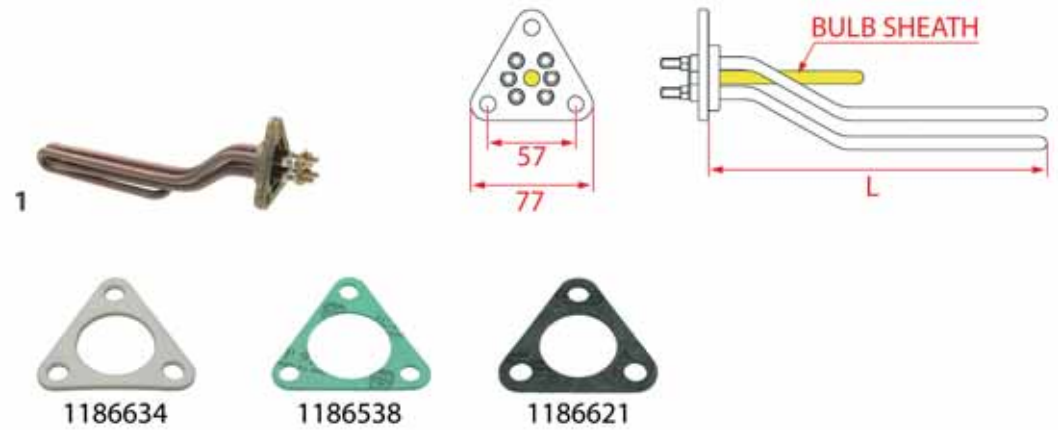

Photo	LF Code	Watt - Volt	L (mm)	Groups	Bulb sheath	Suitable for	For machine model
1	**1755283**	2700W 230V	250	2	NO	VIBIEMME ELETRES2G2722	DOSAPLUS - KOMETA - MINIMAX - SILVER
1	**1755280**	3500W 220V	250	2	NO	VIBIEMME ELETRESMI3522	CHIMAERA - REPLICA
1	**1755282**	3500W 380V	330	2	NO	VIBIEMME ELETRES2G3538	CUBO - EVOLUTION - MERCURY - REPLICA - REVOLUTION
1	**1755228**	4000W 230V	330	2	NO	VIBIEMME ELETRES2G4023	DOSAPLUS - EVOLUTION - KOMETA - LOLLO - MERCURY
1	**1755277**	4500W 380V	460	3	NO	VIBIEMME ELETRES3G4538	CUBO - EVOLUTION - MERCURY - REPLICA - REVOLUTION
1	**1755003**	5000W 230V	450	3-4	NO	VIBIEMME ELETRES3G5023	DOSAPLUS - EVOLUTION - KOMETA - LOLLO - MERCURY

RESISTENZE VICTORIA ARDUINO
HEATING ELEMENTS VICTORIA ARDUINO
HEIZKÖRPER VICTORIA ARDUINO
RESISTENCIAS VICTORIA ARDUINO

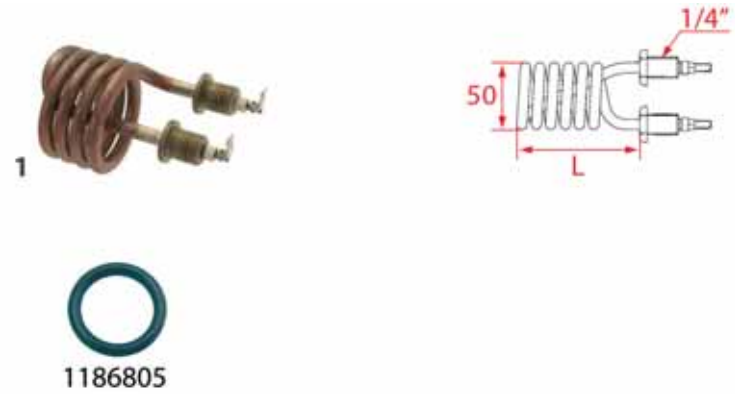

Photo	LF Code	Watt - Volt	L (mm)	Groups	Suitable for	For machine model
1	**1755023**	1000W 230V	65	1	VICTORIA ARDUINO 14100001	VENUSFAMILY

RESISTENZE VICTORIA ARDUINO
HEATING ELEMENTS VICTORIA ARDUINO
HEIZKÖRPER VICTORIA ARDUINO
RESISTENCIAS VICTORIA ARDUINO

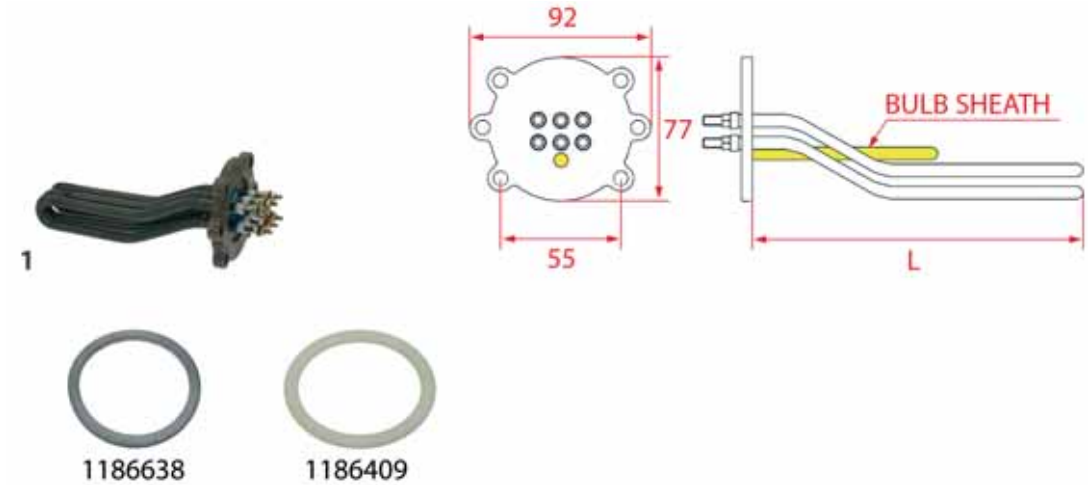

Photo	LF Code	Watt - Volt	L (mm)	Groups	Bulb sheath	Suitable for	For machine model
1	**1755142**	3000W 220/380V	345	2	NO	VICTORIA ARDUINO 14100011	ATHENALEVA - ATHENAS
1	**1755141**	4500W 220/380V	345	2	NO	VICTORIA ARDUINO 14100031	ADONIS
1	**1755143**	5000W 220V	575	3	NO	VICTORIA ARDUINO 14100012	ADONIS - ATHENALEVA

RESISTENZE VICTORIA ARDUINO
HEATING ELEMENTS VICTORIA ARDUINO
HEIZKÖRPER VICTORIA ARDUINO
RESISTENCIAS VICTORIA ARDUINO

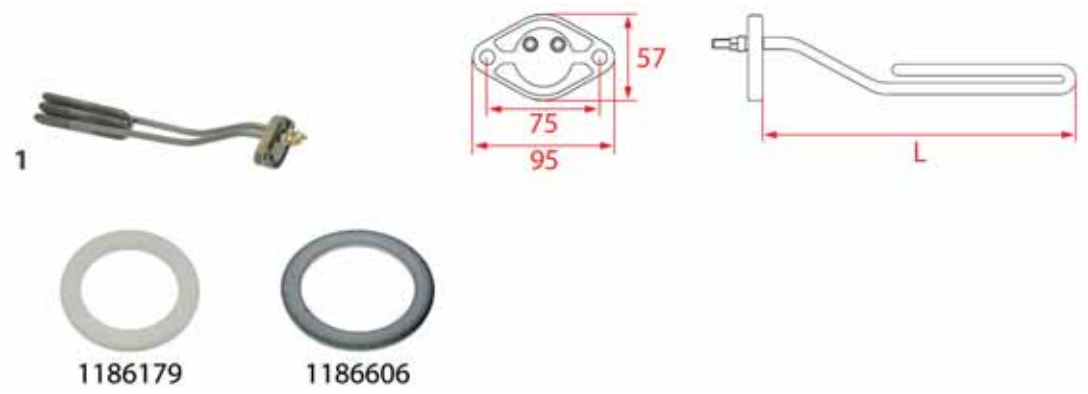

Photo	LF Code	Watt - Volt	L (mm)	Groups	Suitable for	For machine model
1	**5035292**	1800W 230V	300	2	VICTORIA ARDUINO 41400001	VENUSBAR - VENUSCENTURY
1	**5016814**	2400W 230V	375	3	VICTORIA ARDUINO 41400002	VENUSBAR

RESISTENZE VISACREM
HEATING ELEMENTS VISACREM
HEIZKÖRPER VISACREM
RESISTENCIAS VISACREM

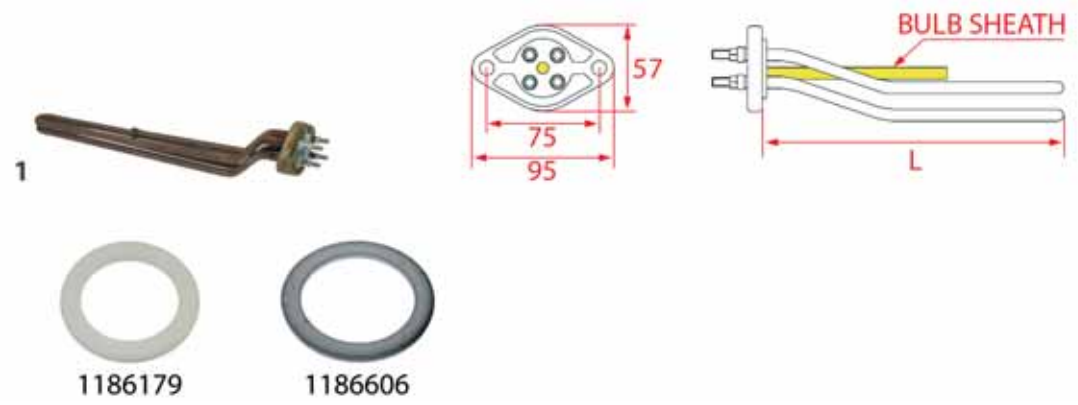

Photo	LF Code	Watt - Volt	L (mm)	Groups	Bulb sheath	Suitable for	For machine model
1	**1755136**	3000W 230V	250	1	YES	VISACREM 08024804	BRAVA - NERA - PALANCA - V6
1	**1755107**	2600W 220V	325	2	YES	VISACREM 02212439	BRAVA - NERA - PALANCA - V6
1	**1755654**	2600W 110V	325	2	YES	VISACREM 07949908	BRAVA - NERA - PALANCA - V6
1	**1755210**	3500W 230V	340	2	YES	VISACREM 08148002	BRAVA - NERA - PALANCA - V6
1	**1755108**	3700W 220V	455	3	YES	VISACREM 02212538	BRAVA - NERA - PALANCA - V6
1	**1755109**	5000W 220V	660	4	NO	VISACREM 02212637	BRAVA - NERA - PALANCA - V6

RESISTENZE WEGA
HEATING ELEMENTS WEGA
HEIZKÖRPER WEGA
RESISTENCIAS WEGA

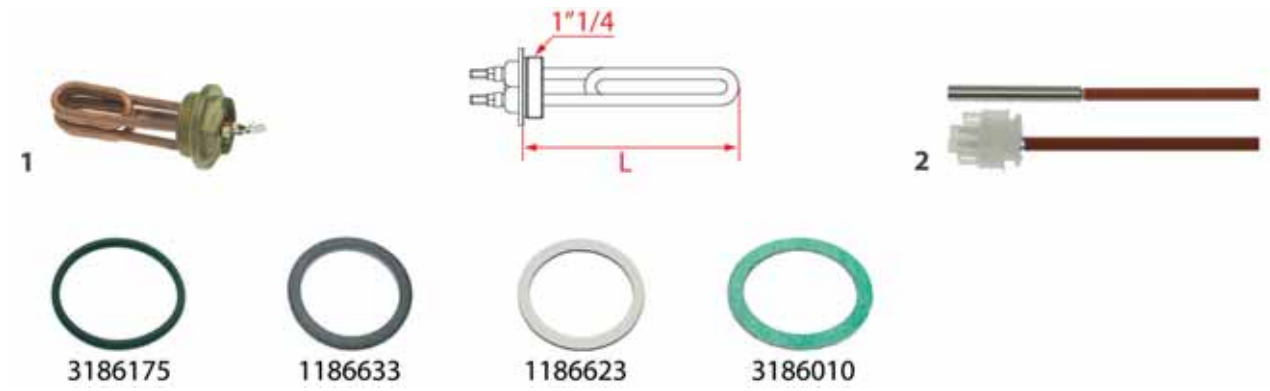

Photo	LF Code	Watt - Volt	L (mm)	Groups	Suitable for	For machine model
1	**1755257**	1000/1090W 230/240V	105	1-2-3-4	WEGA WY17201002	CONCEPT
1	**1755603**	1300W 230V	105	1	WEGA WY17201	AIRY - ANTARES - ATLAS - MININOVA - NOVA - ORION
1	**1755607**	1200W 110V	100	1	WEGA WY17200	MININOVA
2	**1755256**	150W 230V	ø 6.5x50 mm	1-2-3-4	WEGA WY17507001	CONCEPT

RESISTENZE WEGA
HEATING ELEMENTS WEGA
HEIZKÖRPER WEGA
RESISTENCIAS WEGA

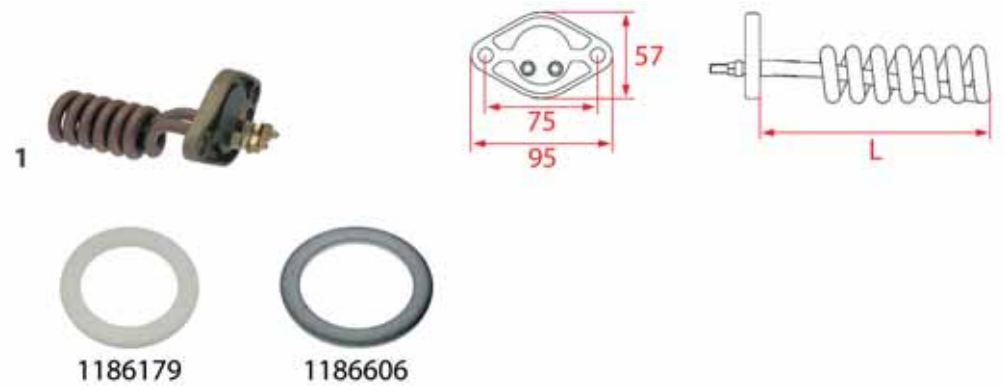

Photo	LF Code	Watt - Volt	L (mm)	Groups	Suitable for	For machine model
1	**1755220**	1500W 230V	110	1	WEGA WY17011	AIRY - ATLAS - COLOSSEUM - ESPRESSA - EURO 2000

RESISTENZE WEGA
HEATING ELEMENTS WEGA
HEIZKÖRPER WEGA
RESISTENCIAS WEGA

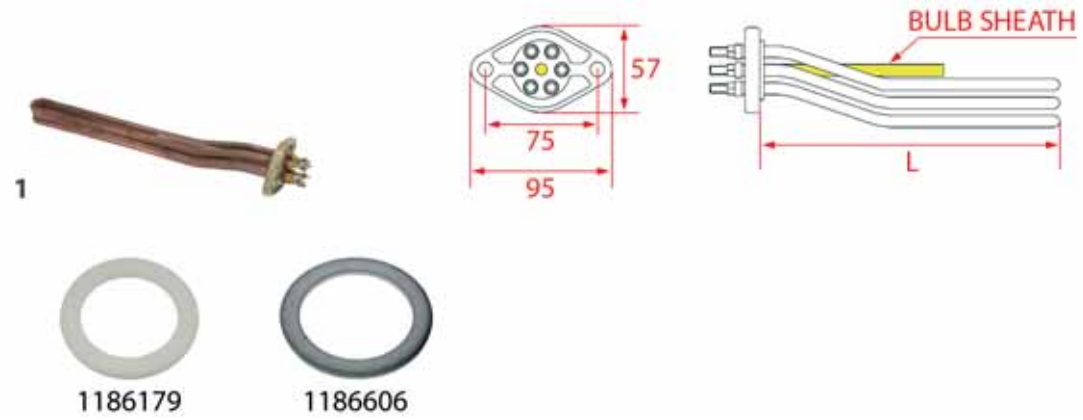

Photo	LF Code	Watt - Volt	L (mm)	Groups	Bulb sheath	Suitable for	For machine model
1	**1755065**	2000/2177W 230/240V	180	1	YES	WEGA WY17006	AIRY - ATLAS - COLOSSEUM - ESPRESSA - EURO 2000
1	**1755608**	2700/2940W 230/240V	180	1	YES	WEGA WY17012	AIRY - ATLAS - ATLAS 10 - COLOSSEUM - ESPRESSA
1	**1755273**	2700W 120V	170	1	NO	WEGA WY17016	PEGASO
1	**1755615**	2600/2831W 230/240V	315	2	YES	WEGA WY17054	AIRY - ATLAS - COLOSSEUM - ESPRESSA - EURO 2000
1	**1755215**	3000/3266W 230/240V	315	2	YES	WEGA WY17058	CONCEPT
1	**1755258**	3400/3700W 230/240V	320	2	YES	WEGA WY17059	AIRY - ATLAS - ATLAS 10 - COLOSSEUM - ESPRESSA
1	**1755070**	4000W 230/240V	310	2	YES	WEGA WY17057	AIRY - ATLAS - COLOSSEUM - ESPRESSA - EURO 2000
1	**1755259**	5000/5440W 230/240V	575	3	YES	WEGA WY17107	AIRY - ATLAS - ATLAS 10 - COLOSSEUM - ESPRESSA
1	**1755245**	6000W 220V	780	4	YES	WEGA WY17153	AIRY - ATLAS - COLOSSEUM - ESPRESSA - EURO 2000

RESISTENZE WEGA
HEATING ELEMENTS WEGA
HEIZKÖRPER WEGA
RESISTENCIAS WEGA

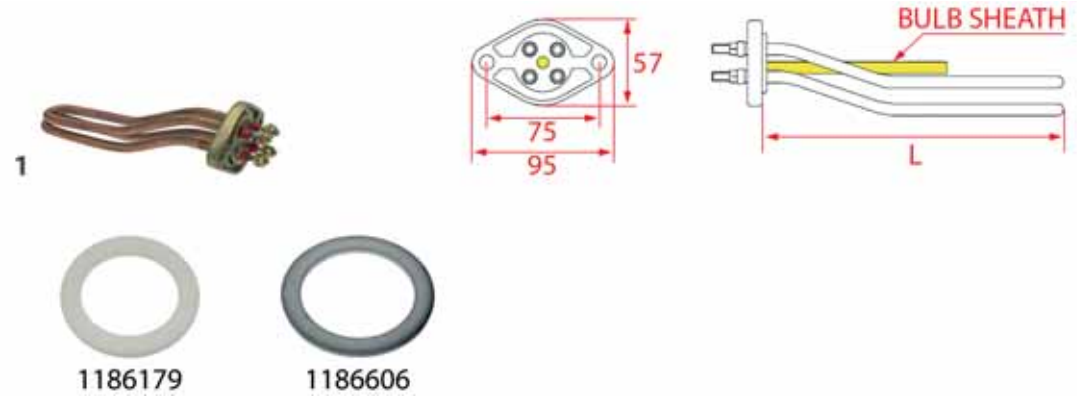

Photo	LF Code	Watt - Volt	L (mm)	Groups	Bulb sheath	Suitable for	For machine model
1	**1755604**	2000W 230/240V	175	1	YES	WEGA WY17002	AIRY - ATLAS - COLOSSEUM - ESPRESSA - EURO 2000
1	**1755601**	2000W 120V	175	1	YES	WEGA WY17001	AIRY - ATLAS - ATLAS 10 - COLOSSEUM - ESPRESSA
1	**1755602**	1700W 110V	180	1	YES	WEGA WY17000	AIRY - ATLAS - COLOSSEUM - ESPRESSA - EURO 2000
1	**1755067**	2600W 230/240V	300	2	YES	WEGA WY17051	AIRY - ATLAS - COLOSSEUM - ESPRESSA - EURO 2000
1	**1755605**	2600W 110V	320	2	YES	WEGA WY17050	AIRY - ATLAS - ATLAS 10 - COLOSSEUM - ESPRESSA
1	**1755068**	3700W 230/240V	500	3	YES	WEGA WY17101	AIRY - ATLAS - COLOSSEUM - ESPRESSA - EURO 2000
1	**1755071**	5000W 230/240V	500	3	YES	WEGA WY17106	AIRY - ATLAS - COLOSSEUM - CONCEPT - ESPRESSA
1	**1755606**	3700W 110V	580	3	NO	WEGA WY17100	AIRY - ATLAS - COLOSSEUM - ESPRESSA - EURO 2000

The most advanced one-stop shop for **spare parts** & **accessories**

PROFESSIONAL HO.RE.CA.

HOME APPLIANCES

The most complete and powerful online ordering service

Always with you… anywhere, anytime,
7 days / 24 hours

www.lfspareparts724.com

RUBINETTI DI CARICO ACQUA ASTORIA/CMA
WATER INLET TAPS ASTORIA/CMA
WASSEREINLAUFHÄHNE ASTORIA/CMA
GRIFOS ENTRADA AGUA ASTORIA/CMA

1

2

3

4

5

6

Photo	LF Code	Notes	Suitable for	For machine model
1	**1348459**	---	ASTORIA/CMA 61014	ARGENTA - BRAVA - DIVINA - GLORIA - RAPALLO - RAPALLO AL
2	**1348457**	---	ASTORIA/CMA 61006	ARGENTA - BRAVA - DIVINA - GLORIA - RAPALLO - RAPALLO AL
3	**1348401**	---	ASTORIA/CMA 61003	---
4	**1348456**	---	ASTORIA/CMA 25615	---
5	**1225401**	---	ASTORIA/CMA	---
6	**1225402**	---	ASTORIA/CMA 25202	---

RUBINETTI DI CARICO ACQUA BFC
WATER INLET TAPS BFC
WASSEREINLAUFHÄHNE BFC
GRIFOS ENTRADA AGUA BFC

1

2

3

4

5

Photo	LF Code	Notes	Suitable for	For machine model
1	**1348344**	3/8	BFC 0510150	CLASSICA - DELUX - GALILEO - GRANDOGE - IMOLA - LA VITTORIA
2	**1358016**	ø 14,5/12x6,6/1,2 mm	BFC 0510148	CLASSICA - DELUX - GALILEO - GRANDOGE - IMOLA - LA VITTORIA
3	**1186131**	ø 17/8,6 mm - ø 6 mm - H 9,2/5,6 mm	BFC 0510184	CLASSICA - DELUX - GALILEO - GRANDOGE - IMOLA - LA VITTORIA
4	**1720011**	ø 7/12 mm - H 20 mm	BFC 0510166	CLASSICA - DELUX - GALILEO - GRANDOGE - IMOLA - LA VITTORIA
5	**1523412**	25 mm	BFC 0510050	---

RUBINETTI DI CARICO ACQUA BIANCHI
WATER INLET TAPS BIANCHI
WASSEREINLAUFHÄHNE BIANCHI
GRIFOS ENTRADA AGUA BIANCHI

1

Photo	LF Code	Notes	Suitable for	For machine model
1	**1358008**	---	BIANCHI 04055126	SARA - SOFIA

RUBINETTI DI CARICO ACQUA BRASILIA
WATER INLET TAPS BRASILIA
WASSEREINLAUFHÄHNE BRASILIA
GRIFOS ENTRADA AGUA BRASILIA

1

2

Photo	LF Code	Notes	Suitable for	For machine model
1	**1348344**	3/8	BRASILIA 00145.0.10.04	---
2	**1720011**	ø 7/12 mm - H 20 mm	BRASILIA 05595.0.00.04	---

RUBINETTI DI CARICO ACQUA CARIMALI
WATER INLET TAPS CARIMALI
WASSEREINLAUFHÄHNE CARIMALI
GRIFOS ENTRADA AGUA CARIMALI

1

2

3

4

5

Photo	LF Code	Notes	Suitable for	For machine model
1	**1348303**	---	CARIMALI 01.00502.20	SISTEMA - UNO - ECO
2	**1348201**	---	CARIMALI 01.00534	SISTEMA - UNO - ECO
3	**1523426**	ø 7.5/13 mm - H 20 mm	CARIMALI 22.00887	---
4	**1186218**	---	CARIMALI 22.00223	---
5	**1349461**	---	CARIMALI 22.00225	---

RUBINETTI DI CARICO ACQUA CIMBALI
WATER INLET TAPS CIMBALI
WASSEREINLAUFHÄHNE CIMBALI
GRIFOS ENTRADA AGUA CIMBALI

1

2

3

4

5

6

Photo	LF Code	Notes	Suitable for	For machine model
1	**1250161**	---	CIMBALI 4831-029-417	---
2	**1250164**	---	CIMBALI 4831-117-838	---
3	**1324046**	---	CIMBALI 419-056-000	---
4	**1186353**	---	CIMBALI 419-017-018	---
5	**1186355**	---	CIMBALI 419-072-000	---
6	**1348315**	---	CIMBALI 427-026-000	---

RUBINETTI DI CARICO ACQUA CIMBALI
INLET WATER TAPS CIMBALI
WASSEREINLAUFHÄHNE CIMBALI
GRIFOS ENTRADA AGUA CIMBALI

1

2

3

4

5

Photo	LF Code	Notes	Suitable for	For machine model
1	**1348047**	---	CIMBALI 407-502-000	---
2	**1523417**	---	CIMBALI 2211-117-836	---
3	**1523419**	---	CIMBALI 3211-029-421	---
4	**1358004**	---	CIMBALI 922-789-000	---
5	**1523017**	---	CIMBALI 419-505-000	---

RUBINETTI DI CARICO ACQUA CONTI
WATER INLET TAPS CONTI
WASSEREINLAUFHÄHNE CONTI
GRIFOS ENTRADA AGUA CONTI

1

Photo	LF Code	Notes	Suitable for	For machine model
1	**1348310**	230V	CONTI 405586	TWIN STAR2 - XEOS2

RUBINETTI DI CARICO ACQUA EXPOBAR
WATER INLET TAPS EXPOBAR
WASSEREINLAUFHÄHNE EXPOBAR
GRIFOS ENTRADA AGUA EXPOBAR

1

2

3

4

5

6

Photo	LF Code	Notes	Suitable for	For machine model
1	**1348058**	---	EXPOBAR 15000200	EB61 - MEGACREM - NEW ELEGANCE
2	**1358015**	---	EXPOBAR 15000210	EB61 - MEGACREM
3	**1348010**	---	EXPOBAR 30369125	---
4	**1348013**	---	EXPOBAR 30369130	---
5	**1348014**	---	EXPOBAR 30369120	---
6	**1348015**	---	EXPOBAR 30369100	---

RUBINETTI DI CARICO ACQUA EXPOBAR
INLET WATER TAPS EXPOBAR
WASSEREINLAUFHÄHNE EXPOBAR
GRIFOS ENTRADA AGUA EXPOBAR

1

2

Photo	LF Code	Notes	Suitable for	For machine model
1	**1523074**	ø 7/12 mm - H 20 mm	EXPOBAR 30369110	---
2	**1358014**	---	EXPOBAR CTAV7-26	---

RUBINETTI DI CARICO ACQUA FAEMA
WATER INLET TAPS FAEMA
WASSEREINLAUFHÄHNE FAEMA
GRIFOS ENTRADA AGUA FAEMA

1

2

3

4

5

Photo	LF Code	Notes	Suitable for	For machine model
1	**1186134**	---	FAEMA 4701132822	---
2	**1250161**	---	FAEMA 4831029417	---
3	**1250164**	---	FAEMA 4831117838	---
4	**1186131**	ø 17/10.4 mm - inlet ø 6 mm - H 9 mm	FAEMA 4151018538	---
5	**1348047**	---	FAEMA 407502000	---

RUBINETTI DI CARICO ACQUA FAEMA
INLET WATER TAPS FAEMA
WASSEREINLAUFHÄHNE FAEMA
GRIFOS ENTRADA AGUA FAEMA

1

2

3

4

5

6

Photo	LF Code	Notes	Suitable for	For machine model
1	**1523417**	SHORT PIN - PERNO CORTO	FAEMA 2211117836	---
1	**1523419**	LONG PIN - PERNO LUNGO	FAEMA 3211029421	---
2	**1523418**	---	FAEMA 3211113062	---
3	**1523416**	---	FAEMA	---
3	**1523017**	---	FAEMA 419505000	---
4	**1523018**	---	FAEMA 2211132290	---
5	**1358004**	---	FAEMA 922789000	---
6	**1523426**	ø 7.5/13 mm - H 20 mm	FAEMA	---

RUBINETTI DI CARICO ACQUA FIAMMA RST
WATER INLET TAPS FIAMMA RST
WASSEREINLAUFHÄHNE FIAMMA RST
GRIFOS ENTRADA AGUA FIAMMA RST

1

2

3

Photo	LF Code	Notes	Suitable for	For machine model
1	**1358012**	---	FIAMMA 5.0.000.0032	PRESTIGE
2	**1358013**	3/8	FIAMMA 5.0.016.0256	---
3	**1523412**	---	FIAMMA 5.0.016.0212	---

RUBINETTI DI CARICO ACQUA FIORENZATO CS
WATER INLET TAPS FIORENZATO CS
WASSEREINLAUFHÄHNE FIORENZATO CS
GRIFOS ENTRADA AGUA FIORENZATO CS

1

2

3

Photo	LF Code	Notes	Suitable for	For machine model
1	**1358001**	---	FIORENZATO A2200202	DUCALE - FENICE - LIDO - PIAZZA SAN MARCO - VENEZIA
2	**1523412**	---	FIORENZATO A2200203	---
3	**1523437**	---	FIORENZATO A2200215	---

RUBINETTI DI CARICO ACQUA FUTURA
WATER INLET TAPS FUTURA
WASSEREINLAUFHÄHNE FUTURA
GRIFOS DE ENTRADA AGUA FUTURA

1

Photo	LF Code	Notes	Suitable for	For machine model
1	**1348344**	3/8	FUTURA 200152	F100

RUBINETTI DI CARICO ACQUA FUTURMAT
WATER INLET TAPS FUTURMAT
WASSEREINLAUFHÄHNE FUTURMAT
GRIFOS ENTRADA AGUA FUTURMAT

1

2

3

Photo	LF Code	Notes	Suitable for	For machine model
1	**1348306**	---	FUTURMAT 07466006	E61 - PALANCA - RIMINI
2	**1523503**	---	FUTURMAT 07665409	---
3	**1186131**	---	FUTURMAT 01853803	---

RUBINETTI DI CARICO ACQUA GAGGIA
WATER INLET TAPS GAGGIA
WASSEREINLAUFHÄHNE GAGGIA
GRIFOS ENTRADA AGUA GAGGIA

1

2

3

Photo	LF Code	Notes	Suitable for	For machine model
1	**1358006**	---	GAGGIA 11006180	DECO
2	**1358005**	---	GAGGIA WGA8001033000	GD - GE - XD - XE
3	**1358007**	---	GAGGIA RB0642	---

RUBINETTI DI CARICO ACQUA GAGGIA SPAGNA
WATER INLET TAPS GAGGIA SPAGNA
WASSEREINLAUFHÄHNE GAGGIA SPAGNA
GRIFOS ENTRADA AGUA GAGGIA SPAGNA

1

2

3

Photo	LF Code	Notes	Suitable for	For machine model
1	**1348306**	---	GAGGIA SPAGNA 07466006	BELLA - NERA - PALANCA
2	**1523503**	---	GAGGIA SPAGNA 07665409	---
3	**1186131**	ø 17/8,6 mm - ø 6 mm - H 9,2/5,6 mm	GAGGIA SPAGNA 01853803	---

RUBINETTI DI CARICO ACQUA GRIMAC
WATER INLET TAPS GRIMAC
WASSEREINLAUFHÄHNE GRIMAC
GRIFOS ENTRADA AGUA GRIMAC

1

2

Photo	LF Code	Notes	Suitable for	For machine model
1	**1348706**	---	GRIMAC 2200600006-GR001	ECLISSE - TEN - TWENTY - ZOLAI - ZOLAII
2	**1358001**	---	GRIMAC A2200202	G11

RUBINETTI DI CARICO ACQUA GRIMAC
INLET WATER TAPS GRIMAC
WASSEREINLAUFHÄHNE GRIMAC
GRIFOS ENTRADA AGUA GRIMAC

1

2

3

4

5

6

Photo	LF Code	Notes	Suitable for	For machine model
1	**1523201**	ø 6.8/12 mm - H 20 mm	GRIMAC 1200300026-GR757	---
2	**1523202**	ø 6.8/12 mm - H 17.5 mm	GRIMAC GR832	---
3	**1186689**	ø 17/10.5 mm - inlet ø 6.5 mm - H 10 mm	GRIMAC GR759	---
4	**1523412**	---	GRIMAC A2200203	---
5	**1523437**	---	GRIMAC A2200215	---
6	**1523200**	---	GRIMAC GR256	---

RUBINETTI DI CARICO ACQUA ITALCREM
WATER INLET TAPS ITALCREM
WASSEREINLAUFHÄHNE ITALCREM
GRIFOS ENTRADA AGUA ITALCREM

1

2

3

Photo	LF Code	Notes	Suitable for	For machine model
1	**1348306**	---	ITALCREM 07466006	CAPRI - PALANCA
2	**1523503**	---	ITALCREM 07665409	---
3	**1186131**	ø 17/8,6 mm - ø 6 mm - H 9,2/5,6 mm	ITALCREM 01853803	---

RUBINETTI DI CARICO ACQUA LAVAZZA
WATER INLET TAPS LAVAZZA
WASSEREINLAUFHÄHNE LAVAZZA
GRIFOS DE ENTRADA AGUA LAVAZZA

1

2

Photo	LF Code	Notes	Suitable for	For machine model
1	**1358005**	---	LAVAZZA 10061968	LB4800
2	**1358008**	---	LAVAZZA 10084120	LB4600

RUBINETTI DI CARICO ACQUA MAIRALI
WATER INLET TAPS MAIRALI
WASSEREINLAUFHÄHNE MAIRALI
GRIFOS ENTRADA AGUA MAIRALI

1

2

3

Photo	LF Code	Notes	Suitable for	For machine model
1	**1348306**	---	MAIRALI 07466006	ARIANNE - GIULIETTA - PALANCA
2	**1523503**	---	MAIRALI 07665409	---
3	**1186131**	ø 17/8,6 mm - ø 6 mm - H 9,2/5,6 mm	MAIRALI 01853803	---

RUBINETTI DI CARICO ACQUA MARCFI-ANCAS
WATER INLET TAPS MARCFI-ANCAS
WASSEREINLAUFHÄHNE MARCFI-ANCAS
GRIFOS ENTRADA AGUA MARCFI-ANCAS

1

Photo	LF Code	Notes	Suitable for	For machine model
1	**1348374**	---	MAECFI-ANCAS BL-2011	---

RUBINETTI DI CARICO ACQUA PAVONI
WATER INLET TAPS PAVONI
WASSEREINLAUFHÄHNE PAVONI
GRIFOS ENTRADA AGUA PAVONI

1

2

3

4

Photo	LF Code	Notes	Suitable for	For machine model
1	**3348186**	---	PAVONI 394211	BAR - BART - PUB
2	**1348313**	---	PAVONI 31107402	BAR - BART - PUB
3	**1523431**	---	PAVONI 394751	---
4	**1186984**	---	PAVONI 314047	---

RUBINETTI DI CARICO ACQUA PROMAC
WATER INLET TAPS PROMAC
WASSEREINLAUFHÄHNE PROMAC
GRIFOS ENTRADA AGUA PROMAC

1

2

3

Photo	LF Code	Notes	Suitable for	For machine model
1	**1348807**	---	PROMAC 10060290	COMPACT - GREEN
2	**1348810**	---	PROMAC 20121012	---
3	**1348811**	---	PROMAC 23208015	---

RUBINETTI DI CARICO ACQUA RANCILIO
WATER INLET TAPS RANCILIO
WASSEREINLAUFHÄHNE RANCILIO
GRIFOS ENTRADA AGUA RANCILIO

1

2

3

Photo	LF Code	Notes	Suitable for	For machine model
1	**1348807**	---	RANCILIO 10060290	CLASSE10 - MILLENNIUM - S20
2	**1348810**	---	RANCILIO 20121012	---
3	**1348811**	---	RANCILIO 23208015	---

RUBINETTI DI CARICO ACQUA ROYAL
WATER INLET TAPS ROYAL
WASSEREINLAUFHÄHNE ROYAL
GRIFOS ENTRADA AGUA ROYAL

1

2

3

4

Photo	LF Code	Notes	Suitable for	For machine model
1	**1348344**	3/8	ROYAL 0510150	DIADEMA - DOGARESSA - SYNCHRO - TECNICA - VALLELUNGA
2	**1720011**	ø 7/12 mm - H 20 mm	ROYAL 0510166	DIADEMA - DOGARESSA - SYNCHRO - TECNICA - VALLELUNGA
3	**1186131**	ø 17/8,6 mm - ø 6 mm - H 9,2/5,6 mm	ROYAL 0510184	DIADEMA - DOGARESSA - SYNCHRO - TECNICA - VALLELUNGA
4	**1358016**	ø 14,5/12x6,6/1,2 mm	ROYAL 0510148	DIADEMA - DOGARESSA - SYNCHRO - TECNICA - VALLELUNGA

RUBINETTI DI CARICO ACQUA SAB ITALIA
WATER INLET TAPS SAB ITALIA
WASSEREINLAUFHÄHNE SAB ITALIA
GRIFOS ENTRADA AGUA SAB ITALIA

1

2

Photo	LF Code	Notes	Suitable for	For machine model
1	**1348344**	3/8	SAB ITALIA	---
2	**1720011**	ø 7/12 mm - H 20 mm	SAB ITALIA SVTMV011	---

RUBINETTI DI CARICO ACQUA SAECO
WATER INLET TAPS SAECO
WASSEREINLAUFHÄHNE SAECO
GRIFOS ENTRADA AGUA SAECO

1

Photo	LF Code	Notes	Suitable for	For machine model
1	**1358005**	---	SAECO WGA8001033000	AROMA

RUBINETTI DI CARICO ACQUA SAN MARCO
WATER INLET TAPS SAN MARCO
WASSEREINLAUFHÄHNE SAN MARCO
GRIFOS ENTRADA AGUA SAN MARCO

1

2

3

4

Photo	LF Code	Notes	Suitable for	For machine model
1	**1348753**	---	SAN MARCO 400029	---
2	**1523523**	---	SAN MARCO 502008	---
3	**1186146**	---	SAN MARCO 205152	---
4	**1186147**	---	SAN MARCO 205262	---

RUBINETTI DI CARICO ACQUA SCALA
WATER INLET TAPS SCALA
WASSEREINLAUFHÄHNE SCALA
GRIFOS ENTRADA AGUA SCALA

1

2

3

4

Photo	LF Code	Notes	Suitable for	For machine model
1	**5031092**	---	SCALA C-0414N	CARMEN - EROICA - IRIS - NORMA
2	**1358013**	3/8	SCALA C-0435	CARMEN - EROICA - IRIS - NORMA
3	**1358016**	ø 14,5/12x6,6/1,2 mm	SCALA C-0432	CARMEN - EROICA - NORMA
4	**1523426**	ø 7,5/13 mm - H 20 mm	SCALA C-0428	CARMEN - EROICA - NORMA

RUBINETTI DI CARICO ACQUA SPAZIALE
INLET WATER TAPS SPAZIALE
WASSEREINLAUFHÄHNE SPAZIALE
GRIFOS ENTRADA AGUA SPAZIALE

1

2

3

4

Photo	LF Code	Notes	Suitable for	For machine model
1	**1348067**	3/8	SPAZIALE 00237	SELETRON PLUS - S3 - S5 - S5 COMPACT - S8 - S8 COMPACT
2	**1348071**	3/8	SPAZIALE 01389	NEW - RAPID - SPAZIO - SUPER 3000
3	**1186728**	---	SPAZIALE 00222	NEW - PROFESSIONALE - RAPID - SELETRON PLUS - SPAZIO
4	**1186689**	---	SPAZIALE 00291	NEW - PROFESSIONALE - RAPID - SELETRON PLUS - SPAZIO

RUBINETTI DI CARICO ACQUA VFA
WATER INLET TAPS VFA
WASSEREINLAUFHÄHNE VFA
GRIFOS ENTRADA AGUA VFA

1

2

3

4

Photo	LF Code	Notes	Suitable for	For machine model
1	**1359014**	---	VFA	ELITE - MAGESTIC - SPLENDOR
2	**1523426**	ø 7.5/13 mm - H 20 mm	VFA	---
3	**1186130**	---	VFA	---
4	**1186131**	ø 17/10.4 mm - inlet ø 6 mm - H 9 mm	VFA	---

RUBINETTI DI CARICO ACQUA VIBIEMME
WATER INLET TAPS VIBIEMME
WASSEREINLAUFHÄHNE VIBIEMME
GRIFOS ENTRADA AGUA VIBIEMME

1

2

3

4

5

6

Photo	LF Code	Notes	Suitable for	For machine model
1	**1358010**	---	VIBIEMME RACCRUBCARLOL	CHIMAERA - EVOLUTION - LOLLO - REPLICA - REVOLUTION
2	**1348381**	---	VIBIEMME RACCRUBCAAAMN	CUBO - DOSAPLUS - MINIMAX - REPLICA
3	**1348059**	---	VIBIEMME ASSRUBCAANMER	CUBO - DOSAPLUS - KOMETA - MERCURY - MINIMAX - REPLICA
4	**1348051**	---	VIBIEMME RACCCOVAES	---
5	**1358013**	3/8	VIBIEMME RACCDA38ANTEV	---
6	**1186131**	ø 17/10.4 mm - inlet ø 6 mm - H 9 mm	VIBIEMME RACCPOGVAESE	---

RUBINETTI DI CARICO ACQUA VISACREM
WATER INLET TAPS VISACREM
WASSEREINLAUFHÄHNE VISACREM
GRIFOS ENTRADA AGUA VISACREM

1

2

3

Photo	LF Code	Notes	Suitable for	For machine model
1	**1348306**	---	VISACREM 07466006	E61 - PALANCA - RIMINI
2	**1523503**	---	VISACREM 07665409	---
3	**1186131**	ø 17/8,6 mm - ø 6 mm - H 9,2/5,6 mm	VISACREM 01853803	---

RUBINETTI DI CARICO ACQUA WEGA
WATER INLET TAPS WEGA
WASSEREINLAUFHÄHNE WEGA
GRIFOS ENTRADA AGUA WEGA

1

2

3

4

5

6

Photo	LF Code	Notes	Suitable for	For machine model
1	**1348459**	---	WEGA WY61014	AIRY - ANTARES - ATLAS - NOVA - ORION - POLARIS
2	**1348457**	---	WEGA WY61002	AIRY - ANTARES - ATLAS - NOVA - ORION - POLARIS
3	**1348401**	---	WEGA W05166	AIRY - ANTARES - ATLAS - NOVA - ORION - POLARIS
4	**1348456**	---	WEGA WY25615	---
5	**1225401**	---	WEGA WY25201	---
6	**1225402**	---	WEGA WY25202	---

RUBINETTI VAPORE-ACQUA ASTORIA/CMA
TAPS STEAM-WATER ASTORIA/CMA
DAMPF-WASSERHÄHNE ASTORIA/CMA
GRIFOS VAPOR-AGUA ASTORIA/CMA

1

2

3

4

5

6

Photo	LF Code	Suitable for	For machine model
1	**1348322**	ASTORIA/CMA 56110	CK - CKX
2	**1348321**	ASTORIA/CMA 56100R	ARGENTA - DENISE - DORA - LISA - PRATIC - PRATIC NEW
3	**1348452**	ASTORIA/CMA 56100R	ARGENTA - DENISE - DORA - LISA - PRATIC - PRATIC NEW
4	**1348076**	ASTORIA/CMA 561041	GLORIA - PERLA 4D - PLUS4YOU
5	**1348077**	ASTORIA/CMA 56102R	CALYPSO - CK - CKX - DIVINA - TANYA
6	**1348451**	ASTORIA/CMA 53003	ARGENTA - CALYPSO - CK - CKX - DENISE - DIVINA - DORA

RUBINETTI VAPORE-ACQUA ASTORIA/CMA
STEAM-WATER TAPS ASTORIA/CMA
DAMPF-WASSERHÄHNE ASTORIA/CMA
GRIFOS VAPOR-AGUA ASTORIA/CMA

1

2

3

4

5

6

Photo	LF Code	Suitable for	For machine model
1	**1449100**	ASTORIA/CMA 25391	ARGENTA - CALYPSO - CK - CKX - DENISE - DORA - GLORIA
2	**1348458**	ASTORIA/CMA 25385001	ARGENTA - CALYPSO - CK - CKE - DENISE - DIVINA - DORA
3	**1186377**	ASTORIA/CMA 25461	ARGENTA - CALYPSO - CK - CKE - DENISE - DIVINA - DORA
4	**1324056**	ASTORIA/CMA 25616	ARGENTA - CALYPSO - CK - CKE - DENISE - DIVINA - DORA
5	**1349458**	ASTORIA/CMA 25678001	ARGENTA - CALYPSO - CK - CKX - DENISE - DIVINA - DORA
6	**1186334**	ASTORIA/CMA 25657	ARGENTA - CK - CKX - DENISE - DORA - GLORIA - GLORIA R12

RUBINETTI VAPORE-ACQUA AZKOYEN
STEAM-WATER TAPS AZKOYEN
DAMPF-WASSERHÄHNE AZKOYEN
GRIFOS VAPOR-AGUA AZKOYEN

1

Photo	LF Code	Suitable for	For machine model
1	**1359008**	AZKOYEN	AZ04 - VIENNA

RUBINETTI VAPORE-ACQUA BEZZERA
STEAM-WATER TAPS BEZZERA
DAMPF-WASSERHÄHNE BEZZERA
GRIFOS VAPOR-AGUA BEZZERA

1 2 3 4

Photo	LF Code	Suitable for	For machine model
1	**1348756**	BEZZERA 5974001.01	BZ35 - PROEX
2	**1348757**	BEZZERA 5974002.01	BZ35 - PROEX
3	**1548030**	BEZZERA 5974005.01	B2000 - B2000 AL - B2006 - B2006 AL - B2009 COMPACT
4	**5061562**	BEZZERA 5974006.01	B2000 - B2000 AL - B2006 - B2006 AL - B2009 COMPACT

RUBINETTI VAPORE-ACQUA BEZZERA
STEAM-WATER TAPS BEZZERA
DAMPF-WASSERHÄHNE BEZZERA
GRIFOS VAPOR-AGUA BEZZERA

1 2 - PLUS 3 4 - PLUS 5 6

Photo	LF Code	Suitable for	For machine model
1	**1348325**	BEZZERA 5970005	EBBIS - EBBIS AL - ELLISSE - ELLISSE AL
2	**1548031**	BEZZERA 5964028	B2013
3	**1348758**	BEZZERA 5974007	EBBIS - EBBIS AL - ELLISSE - ELLISSE AL
4	**1548044**	BEZZERA 5964012R	ELLISSE NEW
5	**1548051**	BEZZERA	EBBIS - EBBIS AL - ELLISSE - ELLISSE AL
6	**1548052**	BEZZERA 5976522	EBBIS - EBBIS AL - ELLISSE - ELLISSE AL

RUBINETTI VAPORE-ACQUA BEZZERA
STEAM-WATER TAPS BEZZERA
DAMPF-WASSERHÄHNE BEZZERA
GRIFOS VAPOR-AGUA BEZZERA

1 2 3 4 5 6

Photo	LF Code	Suitable for	For machine model
1	**1186104**	BEZZERA 5970504	B2000 - B2000 AL - B2006 AL - B3000
2	**5048170**	BEZZERA 5970504.01	B2000 - B2000 AL - B2006 - B2006 AL - B2009 COMPACT
3	**5048263**	BEZZERA 5221804NC	B2000 - B2000 AL - B2006 - B2006 AL - B2009 COMPACT
4	**1348327**	BEZZERA 5221824NC	B2000 - B3000
5	**1186331**	BEZZERA 5224605	B2000 - B2000 AL - B2006 - B2006 AL - B2006 COMPACT
6	**1186101**	BEZZERA 7822201	B2000 - B2000 AL - B2006 - B2006 AL - B2009 COMPACT

RUBINETTI VAPORE-ACQUA BFC
STEAM-WATER TAPS BFC
DAMPF-WASSERHÄHNE BFC
GRIFOS VAPOR-AGUA BFC

1

2

3

4

5

Photo	LF Code	Suitable for	For machine model
1	**1348056**	BFC 3501030	CLASSICA - DELUX - GALILEO - GRANDOGE - IMOLA
2	**1348004**	BFC 0540095	CLASSICA - DELUX - GALILEO - GRANDOGE - IMOLA - JUNIOR
3	**1349064**	BFC 0540135	CLASSICA - DELUX - GALILEO - IMOLA - JUNIOR - LA VITTORIA
4	**1186244**	BFC 0540060	CLASSICA - DELUX - GALILEO - GRANDOGE - IMOLA - JUNIOR
5	**1186988**	BFC 0540115	CLASSICA - DELUX - GALILEO - GRANDOGE - IMOLA - JUNIOR

RUBINETTI VAPORE-ACQUA BIANCHI
STEAM-WATER TAPS BIANCHI
DAMPF-WASSERHÄHNE BIANCHI
GRIFOS VAPOR-AGUA BIANCHI

1

2

3

4

5

6

Photo	LF Code	Suitable for	For machine model
1	**1548027**	BIANCHI	SARA - SOFIA
2	**1548056**	BIANCHI 04055916	SARA - SOFIA
3	**1548006**	BIANCHI 04055926-01	SARA
4	**1548005**	BIANCHI 04059926	LUCIA
5	**1348847**	BIANCHI	LUCIA
6	**1186670**	BIANCHI 04058316	SOFIA

RUBINETTI VAPORE-ACQUA BRASILIA
STEAM-WATER TAPS BRASILIA
DAMPF-WASSERHÄHNE BRASILIA
GRIFOS VAPOR-AGUA BRASILIA

1

2

3

4

5

Photo	LF Code	Suitable for	For machine model
1	**1348056**	BRASILIA 21459.4.00.09	ROMA
2	**1348356**	BRASILIA 11927.4.00.09	CENTURY - CLASSICA - FIRENZE - FIRENZE SL - GRADISCA
3	**1348334**	BRASILIA 00107.4.00.04	CENTURY - CLASSICA - FIRENZE - FIRENZE SL - GRADISCA
4	**1349064**	BRASILIA 06509.0.00.04	CLASSICA - FIRENZE SL - GRADISCA - PORTOFINO AMERICA
5	**1186670**	BRASILIA 06508.0.00.04	CADETTA - CLASSICA - EXCELSIOR - FIRENZE SL - MINICLASSIC

RUBINETTI VAPORE-ACQUA CARIMALI
STEAM-WATER TAPS CARIMALI
DAMPF-WASSERHÄHNE CARIMALI
GRIFOS VAPOR-AGUA CARIMALI

1

2

3

4

5

6

Photo	LF Code	Suitable for	For machine model
1	**5063557**	CARIMALI 95.01880	PRATICA
2	**1548043**	CARIMALI 95.01881	PRATICA
3	**3348187**	CARIMALI 01.00490	CENTO50 - ECO - ECO LUX - ETA BETA - E9 ESPRESSO - KIKKO
4	**1348301**	CARIMALI 01.00489	CENTO50 - ECO - ECO LUX - ETA BETA - E9 ESPRESSO - KIKKO
5	**1548042**	CARIMALI 95.05025	PRATICA
6	**1449314**	CARIMALI 22.00729	CENTO50 - ECO - ECO LUX - ETA BETA - E9 ESPRESSO - KIKKO

RUBINETTI VAPORE-ACQUA CARIMALI
STEAM-WATER TAPS CARIMALI
DAMPF-WASSERHÄHNE CARIMALI
GRIFOS VAPOR-AGUA CARIMALI

1

2

3

4

5

6

Photo	LF Code	Suitable for	For machine model
1	**1523001**	CARIMALI 01.00440	CENTO50 - ECO - ECO LUX - ETA BETA - E9 ESPRESSO - KIKKO
2	**1186213**	CARIMALI 02.01188	CENTO50 - ECO - ECO LUX - ETA BETA - E9 ESPRESSO - KIKKO
3	**1348336**	CARIMALI 22.00751	CENTO50 - ECO - ECO LUX - ETA BETA - E9 ESPRESSO - KIKKO
4	**1186204**	CARIMALI 22.00929	CENTO50 - ECO - ECO LUX - ETA BETA - E9 ESPRESSO - KIKKO
5	**1186244**	CARIMALI 95.05033	PRATICA
6	**1186988**	CARIMALI 95.05024	PRATICA

RUBINETTI VAPORE-ACQUA CASADIO
WATER-STEAM TAPS CASADIO
HÄHNE DAMPF-WASSER CASADIO
GRIFOS VAPOR-AGUA CASADIO

1

2

Photo	LF Code	Suitable for	For machine model
1	**1348316**	CASADIO	QUINDICI
2	**5050244**	CASADIO 958572020F	DIECI - DODICI - QUINDICI - UNDICI - VENTI

RUBINETTI VAPORE-ACQUA CIMBALI
STEAM-WATER TAPS CIMBALI
DAMPF-WASSERHÄHNE CIMBALI
GRIFOS VAPOR-AGUA CIMBALI

1

2

3

4

Photo	LF Code	Suitable for	For machine model
1	**1348316**	CIMBALI 485-514-020	JUNIOR - M15 - M20 - M25 - M27 - M27 2008 - M28 - M30
2	**1548026**	CIMBALI	M39
3	**5034894**	CIMBALI 485-605-010	M39 - M39GT - M39TE
4	**5050244**	CIMBALI 958-572-020F	M21 JUNIOR - M22 - M24 - M24 SELECT - M27 RE

RUBINETTI VAPORE-ACQUA CONTI
STEAM-WATER TAPS CONTI
DAMPF-WASSERHÄHNE CONTI
GRIFOS VAPOR-AGUA CONTI

1

2

Photo	LF Code	Suitable for	For machine model
1	**1348314**	CONTI 4095903	CLUB
2	**1348305**	CONTI 410134	TWIN STAR2 - XEOS2

RUBINETTI VAPORE-ACQUA DELONGHI
STEAM-WATER TAPS DELONGHI
DAMPF-WASSERHÄHNE DELONGHI
GRIFOS VAPOR-AGUA DELONGHI

1

2

3

4

5

6

Photo	LF Code	Suitable for	For machine model
1	**1548009**	DELONGHI 7332139500	EC155 - EC221.B - EC300M
2	**D548014**	DELONGHI 7313281959	ECOV310 - ECO310
3	**1548010**	DELONGHI 7313212911	ECAM23.210.W
4	**D548013**	DELONGHI 7313218741	ECAM20.110 - ECAM21.117 - ECAM22.110 - ECAM22.113
5	**5054429**	DELONGHI 7313216621	EAM2000 - EAM2600 - ECA13000 - ESAM2000 - ESAM2500 - ESAM3200
6	**D548007**	DELONGHI 7313216611	ESAM03.110 - ESAM04.110

RUBINETTI VAPORE-ACQUA DELONGHI
STEAM-WATER TAPS DELONGHI
DAMPF-WASSERHÄHNE DELONGHI
GRIFOS VAPOR-AGUA DELONGHI

1

2

3

4

5

Photo	LF Code	Suitable for	For machine model
1	**D548009**	DELONGHI 7313218631	LATTISSIMA OLD
2	**D548005**	DELONGHI 7313220841	ECAM26.455
3	**D548008**	DELONGHI 7313217291	ECAM23.450 - ECAM25.452
4	**D548011**	DELONGHI ES0065983	PIXIE - PIXIE CLIPS
5	**D548012**	DELONGHI 7313275009	BAR51 - BAR8 IS - BCO130 - DC300 DIGIT - EC500 - EC510 - EC9

RUBINETTI VAPORE-ACQUA ECM
STEAM-WATER TAPS ECM
DAMPF-WASSERHÄHNE ECM
GRIFOS VAPOR-AGUA ECM

1

2

Photo	LF Code	Suitable for	For machine model
1	**1348055**	ECM C199900090	GIOTTO
2	**1348056**	ECM C229900806	MICHELANGELO - RAFFAELLO

RUBINETTI VAPORE-ACQUA ECM MANUFACTURE
STEAM-WATER TAPS ECM MANUFACTURE
DAMPF-WASSERHÄHNE ECM MANUFACTURE
GRIFOS VAPOR-AGUA ECM MANUFACTURE

1

2

3

4

5

Photo	LF Code	Suitable for	For machine model
1	**5058054**	ECM MANUFACTURE P6003.1	ELEKTRONIKA II PROFI - MECHANIKA
2	**5058055**	ECM MANUFACTURE P6003.4	ELEKTRONIKA II PROFI - MECHANIKA
3	**5052818**	ECM MANUFACTURE P6003.2	ELEKTRONIKA II PROFI - MECHANIKA
4	**1348213**	ECM MANUFACTURE P6003.14	ELEKTRONIKA II PROFI - MECHANIKA
5	**1523075**	ECM MANUFACTURE P6003.9	ELEKTRONIKA II PROFI - MECHANIKA

RUBINETTI VAPORE-ACQUA ELEKTRA
STEAM-WATER TAPS ELEKTRA
DAMPF-WASSERHÄHNE ELEKTRA
GRIFOS VAPOR-AGUA ELEKTRA

1

2

3

Photo	LF Code	Suitable for	For machine model
1	**1348130**	ELEKTRA 01990039	CLASSIC
2	**1348131**	ELEKTRA 01991039	CLASSIC
3	**1348031**	ELEKTRA 00150021	MICROCASA

RUBINETTI VAPORE-ACQUA ELEKTRA
STEAM-WATER TAPS ELEKTRA
DAMPF-WASSERHÄHNE ELEKTRA
GRIFOS VAPOR-AGUA ELEKTRA

1

2

3

4

5

6

Photo	LF Code	Suitable for	For machine model
1	**1349023**	ELEKTRA 00950021	SIXTIES
2	**1349026**	ELEKTRA 03207015	KAPPA - MODERN - SIXTIES
3	**1250053**	ELEKTRA 00047014	BELLEEPOQUE - CLASSIC - KAPPA - MODERN - SIXTIES
4	**1186934**	ELEKTRA 00042014	BELLEEPOQUE - CLASSIC - KAPPA - MODERN - SIXTIES
5	**1250054**	ELEKTRA 00045014	BELLEEPOQUE - CLASSIC - KAPPA - MODERN - SIXTIES
6	**1186670**	ELEKTRA 01913014	BELLEEPOQUE - CLASSIC - KAPPA - MODERN - SIXTIES

RUBINETTI VAPORE-ACQUA EXPOBAR
STEAM-WATER TAPS EXPOBAR
DAMPF-WASSERHÄHNE EXPOBAR
GRIFOS VAPOR-AGUA EXPOBAR

1

2

3

4

Photo	LF Code	Suitable for	For machine model
1	**1348226**	EXPOBAR 15000322	ELEN - MARKUS - MEGACREM
2	**1348227**	EXPOBAR 15000330	ELEN - G10 - MARKUS - MARKUS SILVER - MEGACREM - MONROC
3	**1359013**	EXPOBAR 15000325	ELEN - G10 - MARKUS - MARKUS SILVER - MEGACREM - MONROC
4	**1348842**	EXPOBAR 15000400	EB61

RUBINETTI VAPORE-ACQUA EXPOBAR
STEAM-WATER TAPS EXPOBAR
DAMPF-WASSERHÄHNE EXPOBAR
GRIFOS VAPOR-AGUA EXPOBAR

1

2

3

4

Photo	LF Code	Suitable for	For machine model
1	**1348004**	EXPOBAR 30370070	ELEN - G10 - MARKUS - MARKUS SILVER - MEGACREM - MONROC
2	**1186244**	EXPOBAR 30370065	ELEN - G10 - MARKUS - MARKUS SILVER - MEGACREM - MONROC
3	**1186334**	EXPOBAR 30370077	ELEN - G10 - MARKUS - MARKUS SILVER - MEGACREM - MONROC
4	**5058055**	EXPOBAR 30370162	DIAMANT

RUBINETTI VAPORE-ACQUA FAEMA
STEAM-WATER TAPS FAEMA
DAMPF-WASSERHÄHNE FAEMA
GRIFOS VAPOR-AGUA FAEMA

1

2

3

4

Photo	LF Code	Suitable for	For machine model
1	**1348842**	FAEMA	E61
2	**1348057**	FAEMA	E61
3	**1348845**	FAEMA 903743000	E61
4	**1348847**	FAEMA	E61

RUBINETTI VAPORE-ACQUA FAEMA
STEAM-WATER TAPS FAEMA
DAMPF-WASSERHÄHNE FAEMA
GRIFOS VAPOR-AGUA FAEMA

1

2

3

4

Photo	LF Code	Suitable for	For machine model
1	**1348316**	FAEMA 485923012	E98
2	**5050244**	FAEMA 958572020F	E98 COMPACT - E98 PRESIDENT - E98 RE
3	**1348309**	FAEMA 2221134653	DUE
4	**1348319**	FAEMA 4821109716	COMPACT - DUEA - EXPRESS - SPECIAL

RUBINETTI VAPORE-ACQUA FAEMA
STEAM-WATER TAPS FAEMA
DAMPF-WASSERHÄHNE FAEMA
GRIFOS VAPOR-AGUA FAEMA

1

2

3

4

5

Photo	LF Code	Suitable for	For machine model
1	**1186122**	FAEMA 2151136654	DUE - DUE SMART - E61 - E91 - E92 COMPACT - E92 ELITE
2	**1523507**	FAEMA 4151116669	DUE - E91
3	**1186322**	FAEMA 4151135931	E61
4	**1186244**	FAEMA 4151030015	COMPACT - DUEA - EXPRESS - E97 - SPECIAL - STAR
5	**1349472**	FAEMA 3952133708	DUE

RUBINETTI VAPORE-ACQUA FIAMMA RST
STEAM-WATER TAPS FIAMMA RST
DAMPF-WASSERHÄHNE FIAMMA RST
GRIFOS VAPOR-AGUA FIAMMA RST

1

2

3

Photo	LF Code	Suitable for	For machine model
1	**1548029**	FIAMMA RST 5.0.002.0100	MARINA
2	**1548027**	FIAMMA RST 5.0.016.0350	ATLANTIC - PRESTIGE
3	**1348004**	FIAMMA RST 5.0.016.0300	ATLANTIC - PRESTIGE

RUBINETTI VAPORE-ACQUA FIAMMA RST
STEAM-WATER TAPS FIAMMA RST
DAMPF-WASSERHÄHNE FIAMMA RST
GRIFOS VAPOR-AGUA FIAMMA RST

1

2

3

4

5

6

Photo	LF Code	Suitable for	For machine model
1	**1548028**	FIAMMA RST 5.0.016.0321	ATLANTIC - PRESTIGE
2	**1548034**	FIAMMA RST 5.0.002.0116	MARINA
3	**1548033**	FIAMMA RST 5.0.002.0114	MARINA
4	**1528089**	FIAMMA RST 4.0.016.0024	ATLANTIC - PRESTIGE
5	**1186670**	FIAMMA RST 5.0.025.6508	ATLANTIC - PRESTIGE
6	**1186244**	FIAMMA RST 5.0.016.0305	ATLANTIC - PRESTIGE

RUBINETTI VAPORE-ACQUA FIORENZATO CS
STEAM-WATER TAPS FIORENZATO CS
DAMPF-WASSERHÄHNE FIORENZATO CS
GRIFOS VAPOR-AGUA FIORENZATO CS

1

2

3

4

5

6

Photo	LF Code	Suitable for	For machine model
1	**1548002**	FIORENZATO CS A2200231	DUCALE - LIDO
2	**1348057**	FIORENZATO CS A2200066	DUCALE - LIDO
3	**1548001**	FIORENZATO CS A2200080	BRICOLETTA - COLOMBINA - VOLANTE
4	**1348211**	FIORENZATO CS A2200021	FENICE - VENEZIA
5	**1349521**	FIORENZATO CS A2200036	BRICOLETTA - COLOMBINA - VOLANTE
6	**5058054**	FIORENZATO CS A2200264	PIAZZA SAN MARCO

RUBINETTI VAPORE-ACQUA FIORENZATO CS
STEAM-WATER TAPS FIORENZATO CS
DAMPF-WASSERHÄHNE FIORENZATO CS
GRIFOS VAPOR-AGUA FIORENZATO CS

1

2

3

4

5

6

Photo	LF Code	Suitable for	For machine model
1	**1523075**	FIORENZATO CS A2200203	PIAZZA SAN MARCO
2	**5058055**	FIORENZATO CS A1300120	PIAZZA SAN MARCO
3	**5052818**	FIORENZATO CS A2200265	PIAZZA SAN MARCO
4	**1348213**	FIORENZATO CS A2200004	DUCALE - FENICE - LIDO - PIAZZA SAN MARCO - VENEZIA
5	**1186322**	FIORENZATO CS A2200211	DUCALE - LIDO
6	**1186670**	FIORENZATO CS A2200003	VENEZIA - VOLANTE

RUBINETTI VAPORE-ACQUA FRACINO
STEAM-WATER TAPS FRACINO
DAMPF-WASSERHÄHNE FRACINO
GRIFOS VAPOR-AGUA FRACINO

1

2

3

4

5

Photo	LF Code	Suitable for	For machine model
1	**1548039**	FRACINO FC222AA/04	CONTEMPO - ROMANO
2	**1548036**	FRACINO FC222A/03	CONTEMPO
3	**1548038**	FRACINO FC222A	BAMBINO - CHERUB - HEAVENLY - RETRO
4	**1548037**	FRACINO FC221D	BAMBINO - CHERUB - CONTEMPO - HEAVENLY - RETRO
5	**1548040**	FRACINO FC222T	BAMBINO

RUBINETTI VAPORE-ACQUA FUTURA
STEAM-WATER TAPS FUTURA
HÄHNE DAMPF-WASSER FUTURA
GRIFOS DE CARGA VAPOR-AGUA FUTURA

1

2

Photo	LF Code	Suitable for	For machine model
1	**1348056**	FUTURA 200052	F100
2	**1186244**	FUTURA 200157	F100

RUBINETTI VAPORE-ACQUA FUTURMAT
STEAM-WATER TAPS FUTURMAT
DAMPF-WASSERHÄHNE FUTURMAT
GRIFOS VAPOR-AGUA FUTURMAT

1

2

3

4

5

6

Photo	LF Code	Suitable for	For machine model
1	**1348472**	FUTURMAT 08165904	ARIETE - RIMINI
2	**1348473**	FUTURMAT 08205908	ARIETE - RIMINI
3	**1348477**	FUTURMAT 08204802	ARIETE - E61 - CUSTOM - PALANCA - RIMINI
4	**1348476**	FUTURMAT 08165125	ARIETE - E61 - CUSTOM - F3 - RIMINI
5	**1349409**	FUTURMAT 08216102	E61 - CUSTOM - PALANCA
6	**1186244**	FUTURMAT 03001500	ARIETE - E61 - CUSTOM - PALANCA - RIMINI

RUBINETTI VAPORE-ACQUA GAGGIA
STEAM-WATER TAPS GAGGIA
DAMPF-WASSERHÄHNE GAGGIA
GRIFOS VAPOR-AGUA GAGGIA

1

2

3

4

5

6

Photo	LF Code	Suitable for	For machine model
1	**1348600**	GAGGIA WGA8001027000	GD - GE
2	**1348483**	GAGGIA RB0740/A	DECO - D90 - E90 - LCD - TS - XD - XE
3	**1348116**	GAGGIA B0153/A	BABY89 - BABY91 - NEWBABY - NEWBABYDOSATA
4	**5038340**	GAGGIA EF0045/01/A	CLASSIC
5	**1348114**	GAGGIA EF0097/A	COFFE97 - ESPRESSO - ESPRESSODELUXE - EVOLUTION
6	**1348085**	GAGGIA 11003733	TITANIUM

RUBINETTI VAPORE-ACQUA GAGGIA
STEAM-WATER TAPS GAGGIA
DAMPF-WASSERHÄHNE GAGGIA
GRIFOS VAPOR-AGUA GAGGIA

1

2

3

4

5

Photo	LF Code	Suitable for	For machine model
1	**1548059**	GAGGIA 17000512	GRAN GAGGIA
2	**5025424**	GAGGIA 140640300	SYNCRONY - TITANIUM
3	**1348101**	GAGGIA 11004625	UNICA
4	**1439026**	GAGGIA WGARB0721	DECO - FD2000 - FE2000 - GD - GE - TD - TE - TN94 - TS
5	**1548003**	GAGGIA RB0738	D90 - E90

RUBINETTI VAPORE-ACQUA GAGGIA
STEAM-WATER TAPS GAGGIA
DAMPF-WASSERHÄHNE GAGGIA
GRIFOS VAPOR-AGUA GAGGIA

1

2

Photo	LF Code	Suitable for	For machine model
1	**5052727**	GAGGIA 11012381	BRERA
2	**5080336**	GAGGIA 17000114	NAVIGLIO

RUBINETTI VAPORE-ACQUA GAGGIA SPAGNA
STEAM-WATER TAPS GAGGIA SPAGNA
DAMPF-WASSERHÄHNE GAGGIA SPAGNA
ROBINETS VAPEUR-EAU GAGGIA SPAGNA

1

2

3

4

5

6

Photo	LF Code	Suitable for	For machine model
1	**1348472**	GAGGIA SPAGNA 08165904	BELLA - NERA
2	**1348473**	GAGGIA SPAGNA 08205908	BELLA - NERA
3	**1348477**	GAGGIA SPAGNA 08204802	BELLA - PALANCA - NERA - KB
4	**1348476**	GAGGIA SPAGNA 08165125	BELLA - NERA - KB
5	**1349409**	GAGGIA SPAGNA 08216102	PALANCA
6	**1186244**	GAGGIA SPAGNA 03001500	BELLA - PALANCA - NERA - KB

RUBINETTI VAPORE-ACQUA GRIMAC
STEAM-WATER TAPS GRIMAC
DAMPF-WASSERHÄHNE GRIMAC
GRIFOS VAPOR-AGUA GRIMAC

1

2

3

4

5

6

Photo	LF Code	Suitable for	For machine model
1	**1348703**	GRIMAC 1200400038-GR211C	ECLISSE - TEN - TWENTY - ZOLAI - ZOLAII
2	**1348707**	GRIMAC 1200400082-GR118M	ECLISSE - TEN - TWENTY - ZOLAI - ZOLAII
3	**1348842**	GRIMAC 1200400045-GR329	ZOLAII
4	**1348211**	GRIMAC A2200021	G11
5	**1348122**	GRIMAC 2510500032	G10 - SELENITE DOUBLE
6	**1349521**	GRIMAC A2200036	G11

RUBINETTI VAPORE-ACQUA GRIMAC
STEAM-WATER TAPS GRIMAC
DAMPF-WASSERHÄHNE GRIMAC
GRIFOS VAPOR-AGUA GRIMAC

1

2

3

4

5

6

Photo	LF Code	Suitable for	For machine model
1	**1186122**	GRIMAC GR741	ECLISSE - TEN - TWENTY - ZOLAI - ZOLAII
2	**1348213**	GRIMAC A2200004	G11
3	**1186322**	GRIMAC 1201100018-GR800	ECLISSE - TEN - TWENTY - ZOLAI - ZOLAII
4	**1186288**	GRIMAC 1201200008-C294	G10 - SELENITE DOUBLE
5	**1186334**	GRIMAC 1300900111-W604	ECLISSE - TEN - TWENTY - ZOLAI - ZOLAII
6	**1186670**	GRIMAC A2200003	G11

RUBINETTI VAPORE-ACQUA ISOMAC
STEAM WATER TAPS ISOMAC
DAMPF-WASSERHÄHNE ISOMAC
GRIFOS VAPOR AGUA ISOMAC

1

Photo	LF Code	Suitable for	For machine model
1	**1548047**	ISOMAC IS000704	MILLENNIUM - TEA - ZAFFIRO

RUBINETTI VAPORE-ACQUA ITALCREM
STEAM-WATER TAPS ITALCREM
DAMPF-WASSERHÄHNE ITALCREM
GRIFOS VAPOR-AGUA ITALCREM

1

2

3

4

5

6

Photo	LF Code	Suitable for	For machine model
1	**1348472**	ITALCREM 08165904	CAPRI
2	**1348473**	ITALCREM 08205908	CAPRI
3	**1348477**	ITALCREM 08204802	CAPRI - IT4 - PALANCA
4	**1348476**	ITALCREM 08165125	CAPRI - IT4
5	**1349409**	ITALCREM 08216102	PALANCA
6	**1186244**	ITALCREM 03001500	CAPRI - IT4

RUBINETTI VAPORE-ACQUA JURA
WATER-STEAM TAPS JURA
HÄHNE DAMPF-WASSER JURA
GRIFOS VAPOR-AGUA JURA

1

Photo	LF Code	Suitable for	For machine model
1	**1548057**	JURA 68602	F5 - F50 - F55 - F7 - F70 - XF50 - XF70

RUBINETTI VAPORE-ACQUA LAVAZZA
TAPS STEAM-WATER LAVAZZA
DAMPF-WASSERHÄHNE LAVAZZA
GRIFOS VAPOR-AGUA LAVAZZA

1

2

3

4

5

6

Photo	LF Code	Suitable for	For machine model
1	**1348451**	LAVAZZA 10066310	LB4700 - LB4700R - LB4701R
2	**1348077**	LAVAZZA 10070859	LB4700R - LB4701R
3	**1548050**	LAVAZZA 10065907	LB4100 - LB4103
4	**1348600**	LAVAZZA 10061964	LB4800
5	**1548056**	LAVAZZA 10084125	LB4600
6	**1548027**	LAVAZZA	LB4600

RUBINETTI VAPORE-ACQUA LAVAZZA
TAPS STEAM-WATER LAVAZZA
DAMPF-WASSERHÄHNE LAVAZZA
GRIFOS VAPOR-AGUA LAVAZZA

1

2

3

4

5

6

Photo	LF Code	Suitable for	For machine model
1	**1349458**	LAVAZZA 10066320	LB4700 - LB4700R - LB4701R
2	**1324056**	LAVAZZA 10066315	LB4700 - LB4700R - LB4701R
3	**1348458**	LAVAZZA 10066322	LB4700 - LB4700R - LB4701R
4	**1186377**	LAVAZZA 10066318	LB4700 - LB4700R - LB4701R
5	**1186334**	LAVAZZA 10067158	LB4700R - LB4701R
6	**1186670**	LAVAZZA 10084136	LB4600

RUBINETTI VAPORE-ACQUA MAIRALI
STEAM-WATER TAPS MAIRALI
DAMPF-WASSERHÄHNE MAIRALI
GRIFOS VAPOR-AGUA MAIRALI

1

2

3

4

5

6

Photo	LF Code	Suitable for	For machine model
1	**1348472**	MAIRALI 08165904	ARIANNE - GIULIETTA
2	**1348473**	MAIRALI 08205908	ARIANNE - GIULIETTA
3	**1348477**	MAIRALI 08204802	ARIANNE - GIULIETTA - PALANCA
4	**1348476**	MAIRALI 08165125	ARIANNE - GIULIETTA
5	**1349409**	MAIRALI 08216102	PALANCA
6	**1186244**	MAIRALI 03001500	ARIANNE - GIULIETTA - PALANCA

RUBINETTI VAPORE-ACQUA MARCFI-ANCAS
STEAM-WATER TAPS MARCFI-ANCAS
DAMPF-WASSERHÄHNE MARCFI-ANCAS
GRIFOS VAPOR-AGUA MARCFI-ANCAS

1

Photo	LF Code	Suitable for	For machine model
1	**1348372**	MARCFI-ANCAS BM-2108	---

RUBINETTI VAPORE-ACQUA MARZOCCO
STEAM-WATER TAPS MARZOCCO
DAMPF-WASSERHÄHNE MARZOCCO
GRIFOS VAPOR-AGUA MARZOCCO

1

2

3

4

5

6

Photo	LF Code	Suitable for	For machine model
1	**5055403**	MARZOCCO B.1.001.03	FB80 - GB5
2	**1348075**	MARZOCCO L165	FB/70 - LINEA
3	**1348319**	MARZOCCO L167	FB/70 - LINEA
4	**1186776**	MARZOCCO A.1.004	FB80 - GB5
5	**1186244**	MARZOCCO L165/7	FB/70 - LINEA
6	**5048475**	MARZOCCO L192.01	FB80 - GB5

RUBINETTI VAPORE-ACQUA MARZOCCO
STEAM-WATER TAPS MARZOCCO
DAMPF-WASSERHÄHNE MARZOCCO
GRIFOS VAPOR-AGUA MARZOCCO

1

2

3

Photo	LF Code	Suitable for	For machine model
1	**5064451**	MARZOCCO B.1.001.02.K	FB80 - GB5
2	**1548061**	MARZOCCO B.1.001.02.K2	FB80 - GB5
3	**5036268**	MARZOCCO A.1.005	FB80 - GB5

RUBINETTI VAPORE-ACQUA MCE
STEAM-WATER TAPS MCE
DAMPF-WASSERHÄHNE MCE
GRIFOS VAPOR-AGUA MCE

1

2

3

4

Photo	LF Code	Suitable for	For machine model
1	**1348452**	MCE 56100R	START
2	**1348451**	MCE 53003	START
3	**1449100**	MCE 25391	START
4	**1348458**	MCE 25385001	START

RUBINETTI VAPORE-ACQUA MCE
STEAM-WATER TAPS MCE
DAMPF-WASSERHÄHNE MCE
GRIFOS VAPOR-AGUA MCE

1

2

3

4

Photo	LF Code	Suitable for	For machine model
1	**1186377**	MCE 25461	START
2	**1324056**	MCE 25616	START
3	**1349458**	MCE 25678001	START
4	**1186334**	MCE 25657	START

RUBINETTI VAPORE-ACQUA NUOVA SIMONELLI
STEAM-WATER TAPS NUOVA SIMONELLI
DAMPF-WASSERHÄHNE NUOVA SIMONELLI
GRIFOS VAPOR-AGUA NUOVA SIMONELLI

1

2

3

4

Photo	LF Code	Suitable for	For machine model
1	**1348261**	NUOVA SIMONELLI 98006020	APPIA - APPIA COMPACT - AURELIA - MAC2000
2	**1348061**	NUOVA SIMONELLI 98006020	APPIA - APPIA COMPACT - AURELIA
3	**1348364**	NUOVA SIMONELLI 75006032	MAC2000 - PROGRAM VIP
4	**5027943**	NUOVA SIMONELLI 73006010	OSCAR

RUBINETTI VAPORE-ACQUA NUOVA SIMONELLI
STEAM-WATER TAPS NUOVA SIMONELLI
DAMPF-WASSERHÄHNE NUOVA SIMONELLI
GRIFOS VAPOR-AGUA NUOVA SIMONELLI

1

2

3

4

5

6

Photo	LF Code	Suitable for	For machine model
1	**1348038**	NUOVA SIMONELLI 07300354	APPIA - APPIA COMPACT - AURELIA - MAC2000 - MUSICA
2	**1349516**	NUOVA SIMONELLI 01000102	APPIA - AURELIA - PREMIER
3	**1348040**	NUOVA SIMONELLI 07300355	APPIA - APPIA COMPACT - AURELIA - AURELIAII - MAC2000
4	**1349031**	NUOVA SIMONELLI 07300110	APPIA - APPIA COMPACT - AURELIA - AURELIAII - BEACH
5	**1321601**	NUOVA SIMONELLI 98008004	APPIA - APPIA COMPACT - AURELIA - AURELIAII - BEACH
6	**1186988**	NUOVA SIMONELLI 07300293	APPIA - APPIA COMPACT - AURELIA - AURELIAII - MUSICA

RUBINETTI VAPORE-ACQUA ORCHESTRALE
STEAM-WATER TAPS ORCHESTRALE
DAMPF-WASSERHÄHNE ORCHESTRALE
GRIFOS VAPOR-AGUA ORCHESTRALE

1

Photo	LF Code	Suitable for	For machine model
1	**1548008**	ORCHESTRALE D20233003	ETNICA

RUBINETTI VAPORE-ACQUA PAVONI
STEAM-WATER TAPS PAVONI
DAMPF-WASSERHÄHNE PAVONI
GRIFOS VAPOR-AGUA PAVONI

1

2

3

4

Photo	LF Code	Suitable for	For machine model
1	**1348600**	PAVONI 394210	BAR - HOTEL - PUB
2	**1348311**	PAVONI 3710202	PUB
3	**1348851**	PAVONI 395113	PUNO - PTRE
4	**5030317**	PAVONI 395124R	EUROPICCOLA - PROFESSIONAL

RUBINETTI VAPORE-ACQUA PAVONI
STEAM-WATER TAPS PAVONI
DAMPF-WASSERHÄHNE PAVONI
GRIFOS VAPOR-AGUA PAVONI

1

2

3

4

Photo	LF Code	Suitable for	For machine model
1	**1349367**	PAVONI 3133147	BAR - HOTEL - PUB
2	**1449840**	PAVONI 313307	PUNO - PTRE
3	**1186244**	PAVONI 313115	BAR - PUB
4	**1186988**	PAVONI 313118	BAR - HOTEL - PUB

RUBINETTI VAPORE-ACQUA PROMAC
STEAM-WATER TAPS PROMAC
DAMPF-WASSERHÄHNE PROMAC
GRIFOS VAPOR-AGUA PROMAC

1

2

3

4

Photo	LF Code	Suitable for	For machine model
1	**1348855**	PROMAC 10060100	CLUB - COMPACT - GREEN
2	**1348045**	PROMAC 23220029	CLUB - COMPACT - GREEN
3	**1528019**	PROMAC 10060001	CLUB - COMPACT - GREEN
4	**1250027**	PROMAC 25132003	CLUB - COMPACT - GREEN

RUBINETTI VAPORE-ACQUA QUICK MILL
STEAM WATER TAPS QUICK MILL
DAMPF WASSERHÄHNE QUICK MILL
GRIFOS VAPOR AGUA QUICK MILL

1

Photo	LF Code	Suitable for	For machine model
1	**1548045**	QUICK MILL OT0810RLN	0820 - 0835

RUBINETTI VAPORE-ACQUA RANCILIO
STEAM-WATER TAPS RANCILIO
DAMPF-WASSERHÄHNE RANCILIO
GRIFOS VAPOR-AGUA RANCILIO

1

2

3

4

5

Photo	LF Code	Suitable for	For machine model
1	**1348855**	RANCILIO 10060100	CLASSE10 - EPOCA - S20
2	**5033628**	RANCILIO 10060106	CLASSE10 - CLASSE9 - CLASSE8 - EPOCA
3	**5033627**	RANCILIO 10060104	CLASSE10 - CLASSE9 - CLASSE8 - EPOCA
4	**1348805**	RANCILIO 10060114	CLASSE10 - EPOCA - MILLENNIUM - S20 - Z11
5	**1348804**	RANCILIO 10060130	Z11

RUBINETTI VAPORE-ACQUA RANCILIO
STEAM-WATER TAPS RANCILIO
DAMPF-WASSERHÄHNE RANCILIO
GRIFOS VAPOR-AGUA RANCILIO

1

2

3

4

Photo	LF Code	Suitable for	For machine model
1	**1548054**	RANCILIO 10701239	CLASSE10 - CLASSE6 - CLASSE6LEVA - CLASSE7 - CLASSE7LEVA
2	**1548055**	RANCILIO 10701240	CLASSE10 - CLASSE6 - CLASSE6LEVA - CLASSE7 - CLASSE7LEVA
3	**1348052**	RANCILIO 26220015	CLASSE10 - EPOCA - MILLENNIUM - S20 - Z11
4	**1348045**	RANCILIO 23220029	CLASSE10 - EPOCA - S20

RUBINETTI VAPORE-ACQUA RANCILIO
STEAM-WATER TAPS RANCILIO
DAMPF-WASSERHÄHNE RANCILIO
GRIFOS VAPOR-AGUA RANCILIO

1

2

3

4

5

Photo	LF Code	Suitable for	For machine model
1	**1528019**	RANCILIO 10060001	CLASSE10 - CLASSE6 - CLASSE6LEVA - CLASSE7 - CLASSE7LEVA
2	**1250027**	RANCILIO 25132003	CLASSE10 - CLASSE6 - CLASSE6LEVA - CLASSE7 - CLASSE7LEVA
3	**1250025**	RANCILIO 23123010	S20 - Z11
4	**1528022**	RANCILIO 23206005	S20 - Z11
5	**1186670**	RANCILIO 25119005	CLASSE10 - EPOCA - S20

RUBINETTI VAPORE-ACQUA RENEKA
STEAM-WATER TAPS RENEKA
DAMPF-WASSERHÄHNE RENEKA
GRIFOS VAPOR-AGUA RENEKA

1

2

3

4

5

Photo	LF Code	Suitable for	For machine model
1	**1348102**	RENEKA 9217713	MOSAIC
2	**1548021**	RENEKA 9217702	MOSAIC
3	**1348221**	RENEKA 9007702	LC - PALLAS - PLUS - PRESTIGE - VIVA - XL
4	**1359012**	RENEKA 9208020	VIVAE - VIVAS
5	**1528089**	RENEKA 9208022	VIVAE - VIVAS

RUBINETTI VAPORE-ACQUA ROYAL
STEAM-WATER TAPS ROYAL
DAMPF-WASSERHÄHNE ROYAL
GRIFOS VAPOR-AGUA ROYAL

1

2

3

4

5

Photo	LF Code	Suitable for	For machine model
1	**1348056**	ROYAL 3501030	DIADEMA - SYNCHRO
2	**1348004**	ROYAL 0540095	DIADEMA - SYNCHRO
3	**1349064**	ROYAL 0540135	DIADEMA - SYNCHRO
4	**1186244**	ROYAL 0540060	DIADEMA - SYNCHRO
5	**1186988**	ROYAL 0540110	DIADEMA - SYNCHRO

RUBINETTI VAPORE-ACQUA SAB ITALIA
STEAM-WATER TAPS SAB ITALIA
DAMPF-WASSERHÄHNE SAB ITALIA
GRIFOS VAPOR-AGUA SAB ITALIA

1

2

Photo	LF Code	Suitable for	For machine model
1	**1348056**	SAB ITALIA SVECC010	JOLLY
2	**1348211**	SAB ITALIA SVTMR024	ELETTRONICA - ELLIPSE

RUBINETTI VAPORE-ACQUA SAECO
STEAM-WATER TAPS SAECO
DAMPF-WASSERHÄHNE SAECO
GRIFOS VAPOR-AGUA SAECO

1

2

3

4

5

6

Photo	LF Code	Suitable for	For machine model
1	**1348600**	SAECO WGA8001027000	AROMA
2	**1348099**	SAECO 226480900	INCANTO
3	**1348091**	SAECO 9161.204.G	CAFECREMA - CAFENOVA - TREVI - VIENNA - VIENNADELUXE
4	**1348101**	SAECO 11025775	ODEA - TALEA
5	**1348085**	SAECO 11003733	INCANTO
6	**1348083**	SAECO 228455200	AROMA - ESPRESSODREAM

RUBINETTI VAPORE-ACQUA SAECO
STEAM-WATER TAPS SAECO
DAMPF-WASSERHÄHNE SAECO
GRIFOS VAPOR-AGUA SAECO

1

2

3

4

5

Photo	LF Code	Suitable for	For machine model
1	**1439026**	SAECO WGARB0721	AROMA
2	**5025424**	SAECO 140640300	EASY - INCANTO - PRINCESS - VSPRESSO
3	**1348093**	SAECO 0327.014	INCANTO - PRINCESS - STRATOS - VESPRESSO
4	**1348080**	SAECO 9161.057	MAGIC - ROYAL
5	**1348097**	SAECO 9161.205	CAFEBUONO - CAFECREMA - TREVI - VIAROMA - VIENNA

RUBINETTI VAPORE-ACQUA SAECO
STEAM-WATER TAPS SAECO
DAMPF-WASSERHÄHNE SAECO
GRIFOS VAPOR-AGUA SAECO

1

2

3

Photo	LF Code	Suitable for	For machine model
1	**1548059**	SAECO 17000512	POEMIA
2	**5052727**	SAECO 11012381	SYNTIA - XSMALL
3	**5080336**	SAECO 17000114	INTELIA - INTUITA

RUBINETTI VAPORE-ACQUA SAN MARCO
STEAM-WATER TAPS SAN MARCO
DAMPF-WASSERHÄHNE SAN MARCO
GRIFOS VAPOR-AGUA SAN MARCO

1

2

3

4

5

Photo	LF Code	Suitable for	For machine model
1	**1348751**	SAN MARCO 400086	LEVA - 85 - 95
2	**1449118**	SAN MARCO 400400	LEVA - 85
3	**5036202**	SAN MARCO 400150	95
4	**1548049**	SAN MARCO 400300L	105 NEW
5	**1348760**	SAN MARCO 400300	105

RUBINETTI VAPORE-ACQUA SAN MARCO
STEAM-WATER TAPS SAN MARCO
DAMPF-WASSERHÄHNE SAN MARCO
GRIFOS VAPOR-AGUA SAN MARCO

1

2

3

4

5

6

Photo	LF Code	Suitable for	For machine model
1	**1348750**	SAN MARCO 502050	LEVA - 100 - 85 - 95
2	**1349451**	SAN MARCO 206275	LEVA - NEW 105 - 100 - 105 - 85 - 95
2	**1548058**	SAN MARCO 206275 NEW	LEVA - NEW 105 - 100 - 105 - 85 - 95
3	**1528050**	SAN MARCO 205008	LEVA - 100 - 85 - 95
4	**1349486**	SAN MARCO 205310	LEVA - NEW 105 - 100 - 105 - 85 - 95
5	**1186151**	SAN MARCO 205114	LEVA - 85 - 95
6	**1186463**	SAN MARCO 205009	LEVA - NEW 105 - 100 - 105 - 85 - 95

RUBINETTI VAPORE-ACQUA SAN MARCO
STEAM-WATER TAPS SAN MARCO
DAMPF-WASSERHÄHNE SAN MARCO
GRIFOS VAPOR-AGUA SAN MARCO

1

2

3

4

5

Photo	LF Code	Suitable for	For machine model
1	**1523522**	SAN MARCO 205003	LEVA - NEW 105 - 100 - 105 - 85 - 95
2	**1065501**	SAN MARCO 205585	LEVA - 100 - 85 - 95
3	**1186783**	SAN MARCO 205534	LEVA - NEW 105 - 100 - 105 - 85 - 95
4	**1186464**	SAN MARCO 205583	LEVA - 100 - 85 - 95
5	**1186289**	SAN MARCO 205525	LEVA - NEW 105 - 100 - 105 - 85 - 95

RUBINETTI VAPORE-ACQUA SANREMO
STEAM-WATER TAPS SANREMO
DAMPF-WASSERHÄHNE SANREMO
GRIFOS VAPOR-AGUA SANREMO

1

2

3

4

5

6

Photo	LF Code	Suitable for	For machine model
1	**5063557**	SANREMO 10402230A	CAPRI - VENEZIA
2	**1548043**	SANREMO 10402010	CAPRI - FIRENZE - PISA - PORTOFINO - VENEZIA
3	**5026362**	SANREMO 10402120B	AMALFI - CAPRI - MILANO - MILANO LX - PISA - TORINO
4	**1348056**	SANREMO 10402120B	AMALFI - CAPRI - MILANO LX - PISA - TORINO - VENEZIA
5	**5060158**	SANREMO 10402022B	AMALFI - CAPRI - MILANO LX - PISA - TORINO - VENEZIA
6	**1186988**	SANREMO 10402054	AMALFI - CAPRI - MILANO LX - PISA - TORINO - VENEZIA

RUBINETTI VAPORE-ACQUA SCALA
STEAM-WATER TAPS SCALA
DAMPF-WASSERHÄHNE SCALA
GRIFOS VAPOR-AGUA SCALA

1

2

3

4

5

6

Photo	LF Code	Suitable for	For machine model
1	**1348840**	SCALA	BUTTERFLY - CARMEN - EROICA - IRIS - NORMA
2	**1348841**	SCALA	BUTTERFLY - CARMEN - EROICA - IRIS - NORMA
3	**1348056**	SCALA C-0271	BUTTERFLY - CARMEN - EROICA - IRIS - NORMA
4	**1348004**	SCALA C-0187	BUTTERFLY - CARMEN - EROICA - IRIS - NORMA
5	**1528089**	SCALA C-0281	BUTTERFLY - CARMEN - EROICA - IRIS - NORMA
6	**1186244**	SCALA	BUTTERFLY - CARMEN - EROICA - IRIS - NORMA

RUBINETTI VAPORE-ACQUA SCALA
STEAM-WATER TAPS SCALA
DAMPF-WASSERHÄHNE SCALA
GRIFOS VAPOR-AGUA SCALA

1

2

3

4

5

Photo	LF Code	Suitable for	For machine model
1	**1548060**	SCALA C-0022	EROICA
2	**1348057**	SCALA	EROICA
3	**1186122**	SCALA C-0167	EROICA
4	**1186322**	SCALA C-0160	EROICA
5	**1348213**	SCALA C-0175	EROICA

RUBINETTI VAPORE-ACQUA SPAZIALE
STEAM-WATER TAPS SPAZIALE
DAMPF-WASSERHÄHNE SPAZIALE
GRIFOS VAPOR-AGUA SPAZIALE

1

2

3

4

5

6

Photo	LF Code	Suitable for	For machine model
1	**1348073**	SPAZIALE 08463	S40 - S5 COMPACT - S9 - S9 COMPACT
2	**1348065**	SPAZIALE 08462	S40 - S5 - S5 COMPACT - S9 - S9 COMPACT
3	**1348721**	SPAZIALE 00216	NEW - RAPID - SELETRON PLUS - SPAZIO - SUPER3000 - S3
4	**1348068**	SPAZIALE 00217	PROFESSIONALE - S1
4	**1548053**	SPAZIALE 10811	S1 DREAM - S2 - S2 SPAZIO - S8
5	**1348063**	SPAZIALE 08622	S1 - S40 - S5 - S5 COMPACT - S9 - S9 COMPACT
6	**1349077**	SPAZIALE 00227	S2 - S40 - S5 - 5 COMPACT - S8 - S8 COMPACT - S9

RUBINETTI VAPORE-ACQUA SPAZIALE
STEAM-WATER TAPS SPAZIALE
DAMPF-WASSERHÄHNE SPAZIALE
GRIFOS VAPOR-AGUA SPAZIALE

1

2

3

4

5

6

Photo	LF Code	Suitable for	For machine model
1	**1349149**	SPAZIALE 00524	NEW - PROFESSIONALE - RAPID - SPAZIO - SUPER 3000 - S1 - S40
2	**5033607**	SPAZIALE 08273	S1 - S2 - S40 - S5 - S5 COMPACT - S8 - S8 COMPACT - S9 - S9 COMPACT
3	**1348070**	SPAZIALE 01392	NEW - RAPID - SELETRON PLUS - SPAZIO - SUPER 3000 - S2
4	**1186728**	SPAZIALE 00222	NEW - PROFESSIONALE - RAPID - SELETRON PLUS - SPAZIO
5	**1348066**	SPAZIALE 08467	S1 - S40 - S5 - S5 COMPACT - S9 - S9 COMPACT
6	**1186988**	SPAZIALE 07579	S1 - S2 - S3 - S40 - S5 - S5 COMPACT - S8 - S8 COMPACT

RUBINETTI VAPORE-ACQUA VFA
STEAM-WATER TAPS VFA
DAMPF-WASSERHÄHNE VFA
GRIFOS VAPOR-AGUA VFA

1

2

Photo	LF Code	Suitable for	For machine model
1	**3348185**	VFA 528384	ELITE - MAGESTIC
2	**1348117**	VFA 528535	ELITE - MAGESTIC

RUBINETTI VAPORE-ACQUA VIBIEMME
STEAM-WATER TAPS VIBIEMME
DAMPF-WASSERHÄHNE VIBIEMME
GRIFOS VAPOR-AGUA VIBIEMME

1

2

3

4

5

Photo	LF Code	Suitable for	For machine model
1	**1548014**	VIBIEMME RACCRUBVAREDX	CUBO - REPLICA
2	**1548016**	VIBIEMME RACCRUBVARESX	CUBO - REPLICA
3	**1548015**	VIBIEMME RACCRUBVAREDK	CHIMAERA - REPLICA
4	**1548017**	VIBIEMME RACCRUBVARESK	CHIMAERA - REPLICA
5	**1348842**	VIBIEMME RACCP724	REPLICA

RUBINETTI VAPORE-ACQUA VIBIEMME
STEAM-WATER TAPS VIBIEMME
DAMPF-WASSERHÄHNE VIBIEMME
GRIFOS VAPOR-AGUA VIBIEMME

1

2

3

Photo	LF Code	Suitable for	For machine model
1	**1548022**	VIBIEMME RACCRUBVAKNEW	EVOLUTION - KOMETA - MINIMAX - REVOLUTION - SILVER
2	**1548019**	VIBIEMME RACCRUBVAMER	DOSAPLUS - REPLICA
3	**1548020**	VIBIEMME RACCRUBACMEIN	DOSAPLUS - REPLICA

RUBINETTI VAPORE-ACQUA VIBIEMME
STEAM-WATER TAPS VIBIEMME
DAMPF-WASSERHÄHNE VIBIEMME
GRIFOS VAPOR-AGUA VIBIEMME

1

2

3

4

5

Photo	LF Code	Suitable for	For machine model
1	**1548032**	VIBIEMME RACCRUBACREP	CHIMAERA - CUBO - REPLICA
2	**1348843**	VIBIEMME	DOSAPLUS - REPLICA
3	**1548013**	VIBIEMME RACCRUBSC	DOMOBAR
4	**1548021**	VIBIEMME ASSRACCRUBLOLLO	LOLLO
5	**1548023**	VIBIEMME RACCRUBDOVACR	DOMOBARJUNIOR - DOMOBARSUPER

RUBINETTI VAPORE-ACQUA VIBIEMME
STEAM-WATER TAPS VIBIEMME
DAMPF-WASSERHÄHNE VIBIEMME
GRIFOS VAPOR-AGUA VIBIEMME

1

2

3

4

5

6

Photo	LF Code	Suitable for	For machine model
1	**5058054**	VIBIEMME RACCDAFISSRLO	LOLLO
2	**1548011**	VIBIEMME RACCPRGOCR	CHIMAERA - CUBO - DOMOBARJUNIOR - DOMOBARSUPER - REPLICA
3	**1349353**	VIBIEMME RACCPRGOST	CHIMAERA - CUBO - DOSAPLUS - REPLICA
4	**1349352**	VIBIEMME RACCPOSTMER	CHIMAERA - CUBO - DOSAPLUS - KOMETA - MERCURY - MINIMAX
5	**1523075**	VIBIEMME ASSVALVCARICO	LOLLO
6	**1186122**	VIBIEMME RACCVARU	CHIMAERA - CUBO - DOSAPLUS - REPLICA

RUBINETTI VAPORE-ACQUA VIBIEMME
STEAM-WATER TAPS VIBIEMME
DAMPF-WASSERHÄHNE VIBIEMME
GRIFOS VAPOR-AGUA VIBIEMME

1

2

3

4

5

6

Photo	LF Code	Suitable for	For machine model
1	**1348213**	VIBIEMME RACCBULASF	CHIMAERA - CUBO - EVOLUTION - KOMETA - LOLLO - MERCURY
2	**5058055**	VIBIEMME RACCPASTINRLO	LOLLO
3	**1186322**	VIBIEMME RACCBUPGACVA	CHIMAERA - CUBO - DOSAPLUS - REPLICA
4	**5052818**	VIBIEMME RACCINSRUBLOL	LOLLO
5	**1548012**	VIBIEMME RACCRUSASREVO	EVOLUTION - KOMETA - MINIMAX - REVOLUTION - SILVER
6	**1186670**	VIBIEMME RACCBUSASTSNK	KOMETA

RUBINETTI VAPORE-ACQUA VICTORIA ARDUINO
STEAM-WATER TAPS VICTORIA ARDUINO
DAMPF-WASSERHÄHNE VICTORIA ARDUINO
GRIFOS VAPOR-AGUA VICTORIA ARDUINO

1

2

3

4

5

6

Photo	LF Code	Suitable for	For machine model
1	**1348124**	VICTORIA ARDUINO 98060000000008	ADONIS
2	**1348125**	VICTORIA ARDUINO 98060000000012	ADONIS
3	**1348127**	VICTORIA ARDUINO 98070000000014	ADONIS
4	**1348123**	VICTORIA ARDUINO 49900001.1	ATHENAS - VENUSBAR2006
5	**1548063**	VICTORIA ARDUINO 9806000000030 0	VA388 BLACK EAGLE
6	**1548062**	VICTORIA ARDUINO 9807000000012 2	VA388 BLACK EAGLE

RUBINETTI VAPORE-ACQUA VICTORIA ARDUINO
STEAM-WATER TAPS VICTORIA ARDUINO
DAMPF-WASSERHÄHNE VICTORIA ARDUINO
GRIFOS VAPOR-AGUA VICTORIA ARDUINO

1

2

3

4

Photo	LF Code	Suitable for	For machine model
1	**1449840**	VICTORIA ARDUINO 07300295	ATHENA - ATHENA LEVA - VENUS CENTURY
2	**1349031**	VICTORIA ARDUINO 07300110	VENUSCENTURY
3	**1321601**	VICTORIA ARDUINO 98008004	ADONIS
4	**1186988**	VICTORIA ARDUINO 07300293	ATHENA - ATHENA LEVA - VENUSCENTURY

RUBINETTI VAPORE-ACQUA VISACREM
STEAM-WATER TAPS VISACREM
DAMPF-WASSERHÄHNE VISACREM
GRIFOS VAPOR-AGUA VISACREM

1

2

3

4

5

6

Photo	LF Code	Suitable for	For machine model
1	**1348472**	VISACREM 08165904	BRAVA - NERA
2	**1348473**	VISACREM 08205908	BARVA - NERA
3	**1348477**	VISACREM 08204802	BRAVA - PALANCA - NERA
4	**1348476**	VISACREM 08165125	BRAVA - NERA
5	**1349409**	VISACREM 08216102	PALANCA
6	**1186244**	VISACREM 03001500	BARVA - PALANCA - NERA

RUBINETTI VAPORE-ACQUA WEGA
STEAM-WATER TAPS WEGA
DAMPF-WASSERHÄHNE WEGA
GRIFOS VAPOR/AGUA WEGA

1

2

3

4

5

Photo	LF Code	Suitable for	For machine model
1	**1348321**	WEGA W10582	MINI
2	**1348452**	WEGA WY56100R	AIRY - ANTARES - COMBI NOVA - FORMULA MILANO - JUNIOR
3	**1348076**	WEGA WY561041	ATLAS 10
4	**1348077**	WEGA WY56102	COLOSSEUM - ESPRESSA - MININOVA - SPHERA
5	**1348451**	WEGA WY53003	AIRY - ATLAS - ATLAS 10 - COLOSSEUM - COMBI NOVA

RUBINETTI VAPORE-ACQUA WEGA
STEAM-WATER TAPS WEGA
DAMPF-WASSERHÄHNE WEGA
GRIFOS VAPOR-AGUA WEGA

1

2

3

4

5

6

Photo	LF Code	Suitable for	For machine model
1	**1449100**	WEGA WY25391	AIRY - ATLAS - ATLAS 10 - COMBI NOVA - EURO 2000
2	**1348458**	WEGA WY25385	AIRY - ATLAS - ATLAS 10 - COLOSSEUM - COMBI NOVA
3	**1186377**	WEGA WY25461	AIRY - ATLAS - ATLAS 10 - COLOSSEUM - COMBI NOVA
4	**1324056**	WEGA WY25616	AIRY - ATLAS - ATLAS 10 - COLOSEUM - COMBI NOVA
5	**1349458**	WEGA WY25678001	AIRY - ATLAS - ATLAS 10 - COLOSSEUM - COMBI NOVA
6	**1186334**	WEGA WY25657	AIRY - ATLAS - ATLAS 10 - COMBI NOVA - CONCEPT

SCAMBIATORI ASTORIA/CMA
HEAT EXCHANGERS ASTORIA/CMA
WÄRMEAUSTAUSCHER ASTORIA/CMA
INTERCAMBIADORES ASTORIA/CMA

1

2

3

Photo	LF Code	Dimensions (mm)	Suitable for	For machine model
1	**1048024**	---	ASTORIA/CMA 63200	CALYPSO - DIVINA - GLORIA - PERLA 4D - PRATIC NEW
2	**1048005**	ø 42	ASTORIA/CMA 63100	ARGENTA - BRAVA - DENISE - DORA - LISA - PRATIC - VANIA
3	**5014245**	ø 52x165 - 3/8"	ASTORIA/CMA 63002	JUNIOR

SCAMBIATORI CIMBALI
HEAT EXCHANGERS CIMBALI
WÄRMEAUSTAUSCHER CIMBALI
INTERCAMBIADORES CIMBALI

1

2

3

4

Photo	LF Code	Dimensions (mm)	Suitable for	For machine model
1	**1169001**	ø 45x145	CIMBALI	M15
2	**1169002**	ø 42x150	CIMBALI 457-177-005	M20 - M24 - M25 - M27 - M28 - M30 - M31 - M32
3	**1169003**	ø 42x210	CIMBALI 457-207-002	M20 - M21 - M24 - M25 - M27 - M28 - M30 - M31 - M32 - M39
4	**1186279**	---	CIMBALI 457-165-028	JUNIOR - M20 - M21 - M24 - M27 - M28 - M30 - M31 - M32

SCAMBIATORI FAEMA
HEAT EXCHANGERS FAEMA
WÄRMEAUSTAUSCHER FAEMA
INTERCAMBIADORES FAEMA

1

2

Photo	LF Code	Dimensions (mm)	Suitable for	For machine model
1	**1169002**	ø 42x150	FAEMA 457177002	E98 COMPACT
2	**1186279**	---	FAEMA 457165028	E98 COMPACT

SCAMBIATORI JURA
EXCHANGERS JURA
AUSTAUSCHER JURA
INTERCAMBIADORES JURA

1

Photo	LF Code	Dimensions (mm)	Suitable for	For machine model
1	**1370001**	80x45x19	JURA 68218	J5 - J500 - J7 - J80 - J85 - J9 - J90 - J95 - XJ5 - XJ6 - XJ9 - X5

SCAMBIATORI SAN MARCO
HEAT EXCHANGERS SAN MARCO
WÄRMEAUSTAUSCHER SAN MARCO
INTERCAMBIADORES SAN MARCO

1

2

3

4

Photo	LF Code	Dimensions (mm)	Suitable for	For machine model
1	**1169011**	---	SAN MARCO 507099	FCS
2	**1449109**	ø 50x192 - 1/2"	SAN MARCO 507440	100E - 100S - 85E - 85S - 95-21 - 95-22 - 95-23 - 95-26
3	**1449113**	ø 50x124 - 1/2"	SAN MARCO 507430	105COMPACT - 85SPRINT - 95PRACTICAL - 95SPRINT
4	**1449379**	ø 60x190 - 1/2"	SAN MARCO 400166	NEW 105 - 100 - 105

SCAMBIATORI SPAZIALE
HEAT EXCHANGERS SPAZIALE
WÄRMEAUSTAUSCHER SPAZIALE
INTERCAMBIADORES SPAZIALE

1

Photo	LF Code	Dimensions (mm)	Suitable for	For machine model
1	**1048502**	---	SPAZIALE 08041	S5 - S5 COMPACT

SCHEDE ELETTRONICHE ASTORIA/CMA
CIRCUIT BOARDS ASTORIA/CMA
ELEKTRONIK-STEUERPLATINEN ASTORIA/CMA
TARJETAS ELECTRÓNICAS ASTORIA/CMA

1

2

Photo	LF Code	Notes	Suitable for	For machine model
1	**1390119**	250x200 mm - CPU	ASTORIA/CMA 18090099	PLUS4YOU
2	**1390120**	130x100 mm - DISPLAY	ASTORIA/CMA 18371111	PLUS4YOU

SCHEDE ELETTRONICHE CASADIO
ELECTRONIC BOARDS CASADIO
ELEKTROPLATINEN CASADIO
PLACAS ELECTRÓNICAS CASADIO

1

Photo	LF Code	Notes	Suitable for	For machine model
1	**5050407**	125x120 mm - CPU	CASADIO 958889000	DIECI - DODICI - QUINDICI - UNDICI

SCHEDE ELETTRONICHE CIMBALI
CIRCUIT BOARDS CIMBALI
ELEKTRONIK-STEUERPLATINEN CIMBALI
TARJETAS ELECTRÓNICAS CIMBALI

1

2

Photo	LF Code	Notes	Suitable for	For machine model
1	**1390001**	LEVEL - LIVELLO	CIMBALI 535-514-008	M27 2008
2	**1390122**	DISPLAY	CIMBALI 913-902-018	M39 - M39GT - M39TE

SCHEDE ELETTRONICHE DELONGHI
CIRCUIT BOARDS DELONGHI
ELEKTRONIK-STEUERPLATINEN DELONGHI
TARJETAS ELECTRÓNICAS DELONGHI

1

2

3

4

5

6

Photo	LF Code	Notes	Suitable for	For machine model
1	**5061506**	HALL	DELONGHI 5213213971	EAM3300S - ECAM22.320 - ECA14000 - ESAM3000 - ESAM3550 - ESAM3600
2	**D390009**	POWER	DELONGHI 5232109400	EAM2000 - EAM3000.B - EAM3100.SB - EAM3200.S - EAM4000.B - EAM4200.S
3	**D390022**	POWER	DELONGHI 5213216631	ECAM20.110 - ECAM21.117 - ECAM22.110 - ECAM22.113
4	**D390023**	POWER	DELONGHI 5213216661	ECAM23.210 - ECAM24.210
5	**D390013**	POWER	DELONGHI 5213213921	ECAM23.450.B EX:3 - ECAM23.450.S EX:3 - ECAM24.450.S
6	**5065227**	CPU	DELONGHI 5213212811	ESAM3500 - ESAM4500

SCHEDE ELETTRONICHE DELONGHI
CIRCUIT BOARDS DELONGHI
ELEKTRONIK-STEUERPLATINEN DELONGHI
TARJETAS ELECTRÓNICAS DELONGHI

1

2

3

4

5

Photo	LF Code	Notes	Suitable for	For machine model
1	**D390008**	POWER	DELONGHI 5213215201	ECAM26.455
2	**D390005**	POWER	DELONGHI 5213211901	ESAM2000 - ESAM2200.S - ESAM2500.B - ESAM2600 - ESAM3000 - ESAM4200
3	**D390007**	POWER	DELONGHI 5213213691	ESAM2800.SB EX:1
4	**D390014**	POWER	DELONGHI 5213210131	ESAM5500.L - ESAM5500.M
5	**1390128**	TIMER	DELONGHI 5213218751	BIE101 - EC251.B - EC251.W - EC271.B - EC331.S - ECOV311.BK

SCHEDE ELETTRONICHE DELONGHI
CIRCUIT BOARDS DELONGHI
ELEKTRONIK-STEUERPLATINEN DELONGHI
TARJETAS ELECTRÓNICAS DELONGHI

1

2

3

4

5

6

Photo	LF Code	Notes	Suitable for	For machine model
1	**D390017**	POWER	DELONGHI ES0079586	ESSENZA
2	**D390024**	POWER	DELONGHI FL391101	INISSIA
3	**D390010**	POWER	DELONGHI ES0064249	CITIZ - CITIZ & MILK
4	**D390018**	POWER	DELONGHI ES0075951	CITIZ - CITIZ & MILK
5	**1390127**	POWER	DELONGHI ES0092341	CITIZ - CITIZ & MILK
6	**D390012**	POWER	DELONGHI WI1010	DOLCEGUSTO PICCOLO

SCHEDE ELETTRONICHE DELONGHI
CIRCUIT BOARDS DELONGHI
ELEKTRONIK-STEUERPLATINEN DELONGHI
TARJETAS ELECTRÓNICAS DELONGHI

1

2

3

4

5

6

Photo	LF Code	Notes	Suitable for	For machine model
1	**D390004**	CPU	DELONGHI 5213210771	LATTISSIMA OLD
2	**D390015**	HALL	DELONGHI 5213214471	LATTISSIMA PLUS
3	**D390016**	POWER	DELONGHI 5213215311	LATTISSIMA PLUS
4	**D390019**	POWER	DELONGHI 5213216291	LATTISSIMA PLUS
5	**D390011**	POWER	DELONGHI ES0067942	PIXIE - PIXIE CLIPS
6	**D390021**	POWER	DELONGHI FL291181I	U - UMILK

SCHEDE ELETTRONICHE FAEMA
CIRCUIT BOARDS FAEMA
ELEKTRONIK-STEUERPLATINEN FAEMA
TARJETAS ELECTRÓNICAS FAEMA

1

2

Photo	LF Code	Notes	Suitable for	For machine model
1	**1390001**	LEVEL - LIVELLO	FAEMA 535514008	DUE - E61 - E91 - E98PRESIDENT
2	**1390122**	DISPLAY	FAEMA 913902018	TEOREMA

SCHEDE ELETTRONICHE GAGGIA
CIRCUIT BOARDS GAGGIA
ELEKTRONIK-STEUERPLATINEN GAGGIA
TARJETAS ELECTRÓNICAS GAGGIA

1

2

3

4

5

6

Photo	LF Code	Notes	Suitable for	For machine model
1	**7101458**	HALL	GAGGIA 181540900	ACCADEMIA - BRERA - CAPPUCCINO XTWO - PLATINUM - UNICA
2	**1390125**	LEVEL CONTROL	GAGGIA 11003232	ACCADEMIA - BRERA - CAPPUCCINO XTWO - PLATINUM - UNICA
3	**5064998**	CPU	GAGGIA 11012593	BRERA
4	**1390023**	STEAM TAP	GAGGIA 11007569	UNICA
5	**1390100**	DISPLAY	GAGGIA 192200500	SYNCRONY - TITANIUM
6	**5077708**	151x62 mm - CPU	GAGGIA 20003341	PLATINUM EVENT - PLATINUM VOGUE

SCHEDE ELETTRONICHE KRUPS
CIRCUIT BOARDS KRUPS
ELEKTRONISCHE PLATINEN KRUPS
TARJETAS ELECTRÓNICAS KRUPS

1

2

Photo	LF Code	Notes	Suitable for	For machine model
1	**D390017**	POWER	KRUPS MS-0079586	ESSENZA
2	**1390127**	POWER	KRUPS MS-0092341	CITIZ - CITIZ & MILK

SCHEDE ELETTRONICHE MARZOCCO
ELECTRONIC BOARDS MARZOCCO
ELEKTROPLATINEN MARZOCCO
PLACAS ELECTRÓNICAS MARZOCCO

1

Photo	LF Code	Notes	Suitable for	For machine model
1	**5055460**	DISPLAY	MARZOCCO E.1.004	GB5 - FB80 - MISTRAL

SCHEDE ELETTRONICHE NUOVA SIMONELLI
CIRCUIT BOARDS NUOVA SIMONELLI
ELEKTRONIK-STEUERPLATINEN NUOVA SIMONELLI
TARJETAS ELECTRÓNICAS NUOVA SIMONELLI

1

2

3

4

5

6

Photo	LF Code	Notes	Suitable for	For machine model
1	**5029454**	120x66 mm - CPU	NUOVA SIMONELLI 04900730	APPIA
2	**1390098**	160x132 mm - CPU	NUOVA SIMONELLI 04900713	AURELIA
3	**5054990**	132x116 mm - CPU	NUOVA SIMONELLI 04900733	APPIA
4	**1390099**	160x132 mm - CPU	NUOVA SIMONELLI 04900714	AURELIA
5	**5049316**	117x133 mm - CPU	NUOVA SIMONELLI 04900716	AURELIA
6	**5029719**	100x47 mm - DISPLAY	NUOVA SIMONELLI 04900712	AURELIA

SCHEDE ELETTRONICHE QUICK MILL
CIRCUIT BOARDS QUICK MILL
ELEKTRONIK-BEDIENELEMENTE QUICK MILL
TARJETAS ELECTRÓNICAS QUICK MILL

1

2

Photo	LF Code	Notes	Suitable for	For machine model
1	**1390123**	95x85 mm - POWER	QUICK MILL SCH0835M	PEGASO EVO
2	**1390124**	47x40 mm	QUICK MILL RE0810	02820 - 04005 - 06000 - 0820

SCHEDE ELETTRONICHE RANCILIO
CIRCUIT BOARDS RANCILIO
ELEKTRONIK-STEUERPLATINEN RANCILIO
TARJETAS ELECTRÓNICAS RANCILIO

1

Photo	LF Code	Notes	Suitable for	For machine model
1	**1390002**	LEVEL - LIVELLO	RANCILIO 34070171	CLASSE10 - CLASSE6 - CLASSE8 - EPOCA

SCHEDE ELETTRONICHE SAECO
CIRCUIT BOARDS SAECO
ELEKTRONIK-STEUERPLATINEN SAECO
TARJETAS ELECTRÓNICAS SAECO

1

2

Photo	LF Code	Notes	Suitable for	For machine model
1	**1390017**	120x80 mm - CPU	SAECO 20000653	ODEAGIRO
2	**5064998**	CPU	SAECO 11012593	SYNTIA

SCHEDE ELETTRONICHE SAECO
CIRCUIT BOARDS SAECO
ELEKTRONIK-STEUERPLATINEN SAECO
TARJETAS ELECTRÓNICAS SAECO

1

2

3

4

5

6

Photo	LF Code	Notes	Suitable for	For machine model
1	**5500667**	DISPLAY	SAECO 0347.816	ROYALDIGITAL - ROYALPROFESSIONAL
2	**5066496**	DISPLAY	SAECO 421941300941	INTELIA - MOLTIO
3	**1390125**	LEVEL CONTROL	SAECO 11003232	EXPRELIA - INTELIA - MOLTIO - ROYAL NEW - SYNTIA - XELSIS
4	**7101458**	HALL	SAECO 181540900	EXPRELIA - INTELIA - MOLTIO - ODEA - PRIMEA - TALEA - XSMALL
5	**1390023**	STEAM TAP	SAECO 11007569	ODEA - ODEA GIRO - TALEA
6	**5077708**	151x62 mm - CPU	SAECO 11007380	TALEA GIRO

SCHEDE ELETTRONICHE SPAZIALE
CIRCUIT BOARDS SPAZIALE
ELEKTRONIK-STEUERPLATINEN SPAZIALE
TARJETAS ELECTRÓNICAS SPAZIALE

1

2

Photo	LF Code	Notes	Suitable for	For machine model
1	**1090022**	168x100 mm - CPU	SPAZIALE 08471	S5 - S5COMPACT - S8 - S9
2	**1319224**	95x65 mm	SPAZIALE 06001	S3

SCHEDE ELETTRONICHE VICTORIA ARDUINO
CIRCUIT BOARDS VICTORIA ARDUINO
ELEKTRONIK-STEUERPLATINEN VICTORIA ARDUINO
TARJETAS ELECTRÓNICAS VICTORIA ARDUINO

1

2

3

4

5

Photo	LF Code	Notes	Suitable for	For machine model
1	**1390098**	160x132 mm - CPU	VICTORIA ARDUINO 04900713	ADONIS
2	**1390099**	160x132 mm - CPU	VICTORIA ARDUINO 04900714	ADONIS
3	**5049316**	117x133 mm - CPU	VICTORIA ARDUINO 04900716	VENUS CENTURY
4	**1390129**	169x160 mm - VOLUMETRIC	VICTORIA ARDUINO 04901152	VA388 BLACK EAGLE
5	**5029719**	100x47 mm - DISPLAY	VICTORIA ARDUINO 04900712	ADONIS

SCHEDE ELETTRONICHE WEGA
CIRCUIT BOARDS WEGA
ELEKTRONIK-STEUERPLATINEN WEGA
TARJETAS ELECTRÓNICAS WEGA

1

Photo	LF Code	Notes	Suitable for	For machine model
1	**1390119**	250x200 mm - CPU	WEGA WY18090099	CONCEPT

Useful **icons** to advise you on what you are purchasing!

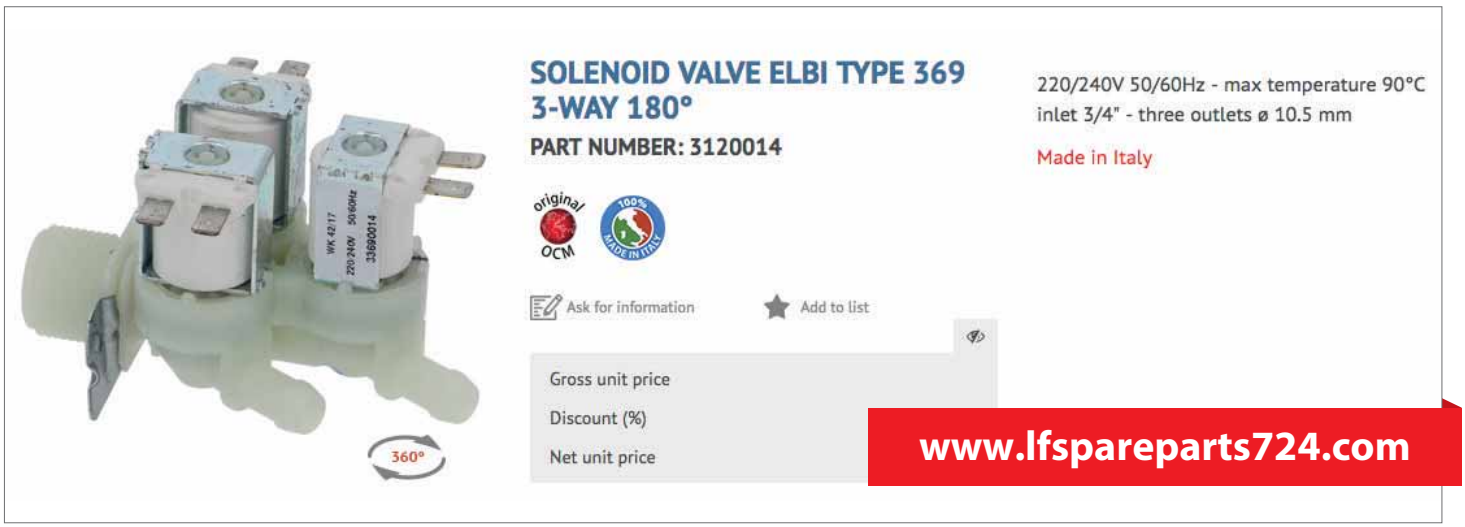

LF are completely transparent when it comes to giving you your component choice.

By using the icons listed you can choose between quality and price.
If you opt for price you accept a certain quality level which is not necessarily recommended by LF in professional applications.

- Genuine OEM
- Original OCM
- Compatible alternative
- Made outside EU
- Item with special price
- 100% Made in Italy

SONDE DI LIVELLO
LEVEL PROBES
NIVEAUSONDEN
SONDAS DE NIVEL

1 2

Photo	LF Code	Notes
1	**1430006**	1/4"M-80 mm
1	**5030757**	1/4"M-100 mm
1	**1341750**	1/4"M-125 mm
1	**3341011**	1/4"M-140 mm
1	**1341751**	1/4"M-150 mm
1	**5067637**	1/4"M-167 mm
1	**1341315**	1/4"M-255 mm
2	**3341069**	1/4"M-75 mm
2	**1341001**	1/4"M-125 mm
2	**1341752**	1/4"M-148 mm

SONDE DI LIVELLO ASTORIA/CMA
LEVEL PROBES ASTORIA/CMA
NIVEAUSONDEN ASTORIA/CMA
SONDAS NIVEL ASTORIA/CMA

1 2 3 4

Photo	LF Code	Notes	Suitable for	For machine model
1	**5030757**	ø 1/4"M-100 mm	ASTORIA/CMA 20261	CKX - CKXE - PLUS4YOU - SIBILLA
2	**1341750**	ø 1/4"M-125 mm	ASTORIA/CMA 20251	ARGENTA - BRAVA - CALYPSO - CK - CKE - CKX - CKXE
3	**1341751**	ø 1/4"M-150 mm	ASTORIA/CMA 20258	---
4	**1341315**	ø 1/4"M-255 mm	ASTORIA/CMA 20252	CK - CKE - CKX - CKXE

SONDE DI LIVELLO AZKOYEN
LEVEL PROBES AZKOYEN
NIVEAUSONDE AZKOYEN
SONDAS NIVEL AZKOYEN

1

Photo	LF Code	Notes	Suitable for	For machine model
1	**1341750**	ø 1/4"M-125 mm	AZKOYEN	---
1	**1341751**	ø 1/4"M-150 mm	AZKOYEN	---

SONDE DI LIVELLO BEZZERA
LEVEL PROBES BEZZERA
NIVEAUFÜHLER BEZZERA
SONDAS NIVEL BEZZERA

1

2

Photo	LF Code	Notes	Suitable for	For machine model
1	**5052337**	M10-90 mm	BEZZERA 5973012	B2000 - B2006 - B3000 - B4000 - EBBIS - ELLISSE
2	**5052338**	M10-155 mm	BEZZERA 5973013	B2000 - B2006 - B3000 - B4000 - B6000 - EBBIS - ELLISSE

SONDE DI LIVELLO BFC
LEVEL PROBES BFC
NIVEAUSONDEN BFC
SONDAS NIVEL BFC

1

Photo	LF Code	Notes	Suitable for	For machine model
1	**5067637**	ø 1/4"M - 165 mm	BFC 4550005	CLASSICA - DELUX - GALILEO - GRANDOGE - IMOLA - JUNIOR

SONDE DI LIVELLO BIANCHI
LEVEL PROBES BIANCHI
NIVEAUSONDEN BIANCHI
SONDAS NIVEL BIANCHI

1

Photo	LF Code	Notes	Suitable for	For machine model
1	**3341011**	ø 1/4"M - 140 mm	BIANCHI 26053126	LUCIA - SARA

SONDE DI LIVELLO BRASILIA
LEVEL PROBES BRASILIA
NIVEAUSONDEN BRASILIA
SONDAS NIVEL BRASILIA

1

2

Photo	LF Code	Notes	Suitable for	For machine model
1	**5030757**	ø 1/4"M-100 mm	BRASILIA 18749.8.00.08	---
2	**1341001**	ø 1/4"M-125 mm	BRASILIA 00649.4.00.08	CENTURY - FIRENZE - GRADISCA - MINICLASSIC - PORTOFINO

SONDE DI LIVELLO BRUGNETTI-AURORA
LEVEL PROBES BRUGNETTI-AURORA
NIVEAUSONDEN BRUGNETTI-AURORA
SONDAS NIVEL BRUGNETTI-AURORA

1

Photo	LF Code	Notes	Suitable for	For machine model
1	**1341751**	ø 1/4"M-150 mm	BRUGNETTI-AURORA 000436	ALEXIA - C

SONDE DI LIVELLO CARIMALI
LEVEL PROBES CARIMALI
NIVEAUSONDEN CARIMALI
SONDAS NIVEL CARIMALI

1

2

Photo	LF Code	Notes	Suitable for	For machine model
1	**3341011**	ø 1/4"M-140 mm	CARIMALI 95.00842	AROMA
2	**1430009**	ø 1/8"M-110 mm	CARIMALI 96.00685	CENTO50 - ETABETAV2 - E9 ESPRESSO - KIKKO - KIKKO2

SONDE DI LIVELLO CASADIO
LEVEL PROBES CASADIO
NIVEAUSONDEN CASADIO
SONDAS NIVEL CASADIO

1

Photo	LF Code	Notes	Suitable for	For machine model
1	**1341038**	ø 1/4"M-89 mm	CASADIO 959714000	DIECIA - DIECIS - DODICIA - DODICIS - VENTI

SONDE DI LIVELLO CIMBALI
LEVEL PROBES CIMBALI
NIVEAUSONDEN CIMBALI
SONDAS NIVEL CIMBALI

1

2

3

4

Photo	LF Code	Notes	Suitable for	For machine model
1	**3341069**	ø 1/4"M-75 mm	CIMBALI 531-690-900	JUNIOR
2	**1430007**	ø 1/4"M-112 mm	CIMBALI 915-789-000	M27 2008
3	**1341003**	ø 1/8"M-108 mm	CIMBALI 495-694-000	M21 - M27 - M28 - M29 - M30 - M31 - M32
4	**1341040**	ø 1/8"M-89 mm	CIMBALI 913-786-010	M24 - M39 - M39GT

SONDE DI LIVELLO CONTI
LEVEL PROBES CONTI
NIVEAUSONDEN CONTI
SONDAS NIVEL CONTI

1

Photo	LF Code	Notes	Suitable for	For machine model
1	**3341069**	ø 1/4"M-75 mm	CONTI 408782	CLUB - SK2 - SSK2

SONDE DI LIVELLO ECM
LEVEL PROBES ECM
NIVEAUSONDEN ECM
SONDAS NIVEL ECM

1

2

Photo	LF Code	Notes	Suitable for	For machine model
1	**1430006**	ø 1/4"M-80 mm	ECM C199900839	GIOTTO - VENEZIANO
2	**1341750**	ø 1/4"M-125 mm	ECM C199900295	LAURA - MICHELANGELO - RAFFAELLO - VENEZIANO

SONDE DI LIVELLO ECM MANUFACTURE
LEVEL PROBES ECM MANUFACTURE
NIVEAUSONDEN ECM MANUFACTURE
SONDAS NIVEL ECM MANUFACTURE

1

Photo	LF Code	Notes	Suitable for	For machine model
1	**1430006**	ø 1/4"M-80 mm	ECM MANUFACTURE C199900839	ELEKTRONIKA II PROFI - MECHANIKA

SONDE DI LIVELLO ELEKTRA
LEVEL PROBES ELEKTRA
NIVEAUSONDEN ELEKTRA
SONDAS NIVEL ELEKTRA

1

Photo	LF Code	Notes	Suitable for	For machine model
1	**1341010**	ø 3/8"M-131 mm	ELEKTRA 01110034	CLASSIC - KAPPA

SONDE DI LIVELLO EXPOBAR
LEVEL PROBES EXPOBAR
NIVEAUSONDEN EXPOBAR
SONDAS NIVEL EXPOBAR

1

Photo	LF Code	Notes	Suitable for	For machine model
1	**1341751**	ø 1/4"M-150 mm	EXPOBAR 60100040	CARAT - DIAMANT - EB61 - ELEN - G10 - MARKUS

SONDE DI LIVELLO FAEMA
LEVEL PROBES FAEMA
NIVEAUSONDEN FAEMA
SONDAS NIVEL FAEMA

1 2 3 4 5

Photo	LF Code	Notes	Suitable for	For machine model
1	**1341038**	ø 1/4"M-89 mm	FAEMA 959714000	CARISMA
2	**1430007**	ø 1/4"M-112 mm	FAEMA 915789000	EMBLEMA - EMBLEMA RESTYLING - ENOVA - TEOREMA
3	**1341003**	ø 1/8"M-108 mm	FAEMA 495694000	E98 COMPACT
4	**1341040**	ø 1/8"M-89 mm	FAEMA 913786010	ENOVA
5	**1430008**	M3-124 mm	FAEMA 1000091896	ELITE - E61 - STYLEMA

SONDE DI LIVELLO FIAMMA RST
LEVEL PROBES FIAMMA RST
NIVEAUSONDEN FIAMMA RST
SONDAS NIVEL FIAMMA RST

1

Photo	LF Code	Notes	Suitable for	For machine model
1	**3341011**	ø 1/4"M-140 mm	FIAMMA RST 7.0.000.0760	ATLANTIC - MARINA - PRESTIGE

SONDE DI LIVELLO FIORENZATO CS
LEVEL PROBES FIORENZATO CS
NIVEAUSONDEN FIORENZATO CS
SONDAS NIVEL FIORENZATO CS

1 2

Photo	LF Code	Notes	Suitable for	For machine model
1	**1341752**	ø 1/4"M-148 mm	FIORENZATO A1400001	DUCALE - FENICE - LIDO - PIAZZA SAN MARCO - VENEZIA
2	**3341069**	ø 1/4"M-75 mm	FIORENZATO A1400003	COLOMBINA - BRICOLETTA - VOLANTE

SONDE DI LIVELLO FRACINO
LEVEL PROBES FRACINO
NIVEAUSONDEN FRACINO
SONDAS NIVEL FRACINO

1

Photo	LF Code	Notes	Suitable for	For machine model
1	**1430005**	ø 1/4"M-122 mm	FRACINO FC191	BAMBINO

SONDE DI LIVELLO FUTURMAT
LEVEL PROBES FUTURMAT
NIVEAUSONDEN FUTURMAT
SONDAS NIVEL FUTURMAT

1

Photo	LF Code	Notes	Suitable for	For machine model
1	**3341011**	ø 1/4"M-140 mm	FUTURMAT 0441/090816	ARIETE - CUSTOM - E61 - F3 - PALANCA - RIMINI

SONDE DI LIVELLO GAGGIA
LEVEL PROBES GAGGIA
NIVEAUSONDEN GAGGIA
SONDAS NIVEL GAGGIA

1

Photo	LF Code	Notes	Suitable for	For machine model
1	**1341016**	ø 1/4"M-123 mm	GAGGIA WGADM1935	DECO - GD - GE - LCD - XD - XE

SONDE DI LIVELLO GAGGIA SPAGNA
LEVEL PROBES GAGGIA SPAGNA
NIVEAUSONDEN GAGGIA SPAGNA
SONDAS NIVEL GAGGIA SPAGNA

1

Photo	LF Code	Notes	Suitable for	For machine model
1	**3341011**	ø 1/4"M-140 mm	GAGGIA SPAGNA 0441/090816	BELLA - G6 - KB - NERA - PALANCA

SONDE DI LIVELLO GRIMAC
LEVEL PROBES GRIMAC
NIVEAUSONDEN GRIMAC
SONDAS NIVEL GRIMAC

1

2

3

Photo	LF Code	Notes	Suitable for	For machine model
1	**1341750**	ø 1/4"M-125 mm	GRIMAC 2250400003-GRC605	ECLISSE - TEN
2	**1341752**	ø 1/4"M-148 mm	GRIMAC 1250400006-GR212B	G10 - G11
3	**1341751**	ø 1/4"M-150 mm	GRIMAC GR212	TWENTY - ZOLA I - ZOLA II

SONDE DI LIVELLO ISOMAC
LEVEL PROBES ISOMAC
NIVEAUFÜHLER ISOMAC
SONDAS NIVEL ISOMAC

1

Photo	LF Code	Notes	Suitable for	For machine model
1	**1430011**	ø 1/8"M-81 mm	ISOMAC IS000527	MILLENNIUM - MONDIALE - TEA

SONDE DI LIVELLO ITALCREM
LEVEL PROBES ITALCREM
NIVEAUSONDEN ITALCREM
SONDAS NIVEL ITALCREM

1

Photo	LF Code	Notes	Suitable for	For machine model
1	**3341011**	ø 1/4"M-140 mm	ITALCREM 0441/090816	CAPRI - IT4 - PALANCA

SONDE DI LIVELLO LA PICCOLA
LEVEL PROBES LA PICCOLA
NIVEAUSONDEN LA PICCOLA
SONDAS DE NIVEL LA PICCOLA

1

Photo	LF Code	Notes	Suitable for	For machine model
1	**1450012**	ø 1/4"M-190 mm	LA PICCOLA C24	CECILIA

SONDE DI LIVELLO LAVAZZA
LEVEL PROBES LAVAZZA
NIVEAUFÜHLER LAVAZZA
SONDAS NIVEL LAVAZZA

1

2

3

4

Photo	LF Code	Notes	Suitable for	For machine model
1	**5030757**	ø 1/4"M-100 mm	LAVAZZA 10066392	LB2800 - LB4100 - LB4103
2	**1341016**	ø 1/4"M-123 mm	LAVAZZA 10062021	LB4800
3	**1341750**	ø 1/4"M-125 mm	LAVAZZA 10066131	LB4700 - LB4700R - LB4701R
4	**3341011**	ø 1/4"M-140 mm	LAVAZZA 10084200	LB4600

SONDE DI LIVELLO MAIRALI
LEVEL PROBES MAIRALI
NIVEAUSONDEN MAIRALI
SONDAS NIVEL MAIRALI

1

Photo	LF Code	Notes	Suitable for	For machine model
1	**3341011**	ø 1/4"M-140 mm	MAIRALI 0441/090816	ARIANNE - GIULIETTA - PALANCA

SONDE DI LIVELLO MARZOCCO
LEVEL PROBES MARZOCCO
NIVEAUSONDEN MARZOCCO
SONDAS NIVEL MARZOCCO

1

Photo	LF Code	Notes	Suitable for	For machine model
1	**3341011**	ø 1/4"M-140 mm	MARZOCCO LA052	FB70 - FB80 - GB5 - GS3 - LINEA - MISTRAL

SONDE DI LIVELLO MCE
LEVEL PROBES MCE
NIVEAUSONDEN MCE
SONDAS NIVEL MCE

1

Photo	LF Code	Notes	Suitable for	For machine model
1	**1341750**	ø 1/4"M-125 mm	MCE 20251	START

SONDE DI LIVELLO NUOVA SIMONELLI
LEVEL PROBES NUOVA SIMONELLI
NIVEAUSONDEN NUOVA SIMONELLI
SONDAS NIVEL NUOVA SIMONELLI

1

Photo	LF Code	Notes	Suitable for	For machine model
1	**1341013**	ø 1/4"M-130 mm	NUOVA SIMONELLI 09000005	APPIA - AURELIA - JAZZ - PREMIER

SONDE DI LIVELLO ORCHESTRALE
LEVEL PROBES ORCHESTRALE
NIVEAUSONDEN ORCHESTRALE
SONDAS NIVEL ORCHESTRALE

1

Photo	LF Code	Notes	Suitable for	For machine model
1	**1341750**	ø 1/4"M-125 mm	ORCHESTRALE D20251	ETNICA - PHONICA

SONDE DI LIVELLO PAVONI
LEVEL PROBES PAVONI
NIVEAUSONDEN PAVONI
SONDAS NIVEL PAVONI

1

Photo	LF Code	Notes	Suitable for	For machine model
1	**1341750**	ø 1/4"M-125 mm	PAVONI 438015	BAR - PUB

SONDE DI LIVELLO PROMAC
LEVEL PROBES PROMAC
NIVEAUSONDEN PROMAC
SONDAS NIVEL PROMAC

1

Photo	LF Code	Notes	Suitable for	For machine model
1	**1341802**	ø 1/8"M-115 mm	PROMAC 34200088	CLUB - COMPACT - GREEN

SONDE DI LIVELLO QUICK MILL
LEVEL PROBES QUICK MILL
NIVEAUSONDEN QUICK MILL
SONDAS NIVEL QUICK MILL

1

Photo	LF Code	Notes	Suitable for	For machine model
1	**1430010**	ø 1/8"M-150 mm	QUICK MILL SONDA	0980 ANDREJA

SONDE DI LIVELLO RANCILIO
LEVEL PROBES RANCILIO
NIVEAUSONDEN RANCILIO
SONDAS NIVEL RANCILIO

1

Photo	LF Code	Notes	Suitable for	For machine model
1	**1341802**	ø 1/8"M-115 mm	RANCILIO 34200088	CLASSE10 - EPOCA - MILLENIUM - S20

SONDE DI LIVELLO RENEKA
LEVEL PROBES RENEKA
NIVEAUSONDEN RENEKA
SONDAS NIVEL RENEKA

1

2

Photo	LF Code	Notes	Suitable for	For machine model
1	**1341020**	92 mm	RENEKA 9010490	LC - MOSAIC - VIVA - VIVAE - VIVAS - XLPALLAS
2	**1341021**	150 mm	RENEKA 9010491	LC - MOSAIC - PLUS - PRESTIGE - VIVA - VIVAE - VIVAS

SONDE DI LIVELLO ROYAL
LEVEL PROBES ROYAL
NIVEAUSONDEN ROYAL
SONDAS NIVEL ROYAL

1

Photo	LF Code	Notes	Suitable for	For machine model
1	**5067637**	ø 1/4"M-165 mm	ROYAL 4550005	DIADEMA - SYNCHRO

SONDE DI LIVELLO SAECO
LEVEL PROBES SAECO
NIVEAUSONDEN SAECO
SONDAS NIVEL SAECO

1

Photo	LF Code	Notes	Suitable for	For machine model
1	**1341016**	ø 1/4"M-123 mm	SAECO WGADM1935	AROMA

SONDE DI LIVELLO SAN MARCO
LEVEL PROBES SAN MARCO
NIVEAUSONDEN SAN MARCO
SONDAS NIVEL SAN MARCO

1

2

Photo	LF Code	Notes	Suitable for	For machine model
1	**1341012**	ø 1/4"M-85 mm	SAN MARCO 202237	NEW 105 - 100 - 105 - 85 - 95
2	**1341014**	ø 3/8"M-142 mm	SAN MARCO 400124	LEVA - 105 - 85 - 95

SONDE DI LIVELLO SANREMO
LEVEL PROBES SANREMO
NIVEAUSONDEN SANREMO
SONDAS NIVEL SANREMO

1

2

Photo	LF Code	Notes	Suitable for	For machine model
1	**5058690**	ø 1/4"M-120 mm	SANREMO 10112064	CAPRI - TORINO - VENEZIA - VERONA
2	**1341751**	ø 1/4"M-150 mm	SANREMO 10112042	AMALFI - CAPRI - MILANO LX - PISA - TORINO - VERONA - ZOE

SONDE DI LIVELLO SCALA
LEVEL PROBES SCALA
NIVEAUSONDEN SCALA
SONDAS NIVEL SCALA

1

Photo	LF Code	Notes	Suitable for	For machine model
1	**1341750**	ø 1/4"M-125 mm	SCALA C-0351	CARMEN - EROICA - NORMA

SONDE DI LIVELLO SPAZIALE
LEVEL PROBES SPAZIALE
NIVEAUSONDEN SPAZIALE
SONDAS NIVEL SPAZIALE

1

Photo	LF Code	Notes	Suitable for	For machine model
1	**3341011**	ø 1/4"M-140 mm	SPAZIALE 06357	SPAZIO - SUPER 3000 - S2 - S3 - S40 - S5 - S5 - S8 - S9

SONDE DI LIVELLO SPINEL
LEVEL PROBES SPINEL
NIVEAUSONDEN SPINEL
SONDAS NIVEL SPINEL

1

Photo	LF Code	Notes	Suitable for	For machine model
1	**1341751**	ø 1/4"M-150 mm	SPINEL SR.000.084.001	DUELUX - DUETTOLUX - ESSELUX - MINIMINILUX - RONDOLUX

SONDE DI LIVELLO VIBIEMME
LEVEL PROBES VIBIEMME
NIVEAUSONDEN VIBIEMME
SONDAS NIVEL VIBIEMME

1

Photo	LF Code	Notes	Suitable for	For machine model
1	**3341011**	ø 1/4"M-140 mm	VIBIEMME ELETSON	CHIMAERA - CUBO - EVOLUTION - KOMETA - LOLLO - MERCURY

SONDE DI LIVELLO VICTORIA ARDUINO
LEVEL PROBES VICTORIA ARDUINO
NIVEAUSONDEN VICTORIA ARDUINO
SONDAS NIVEL VICTORIA ARDUINO

1

Photo	LF Code	Notes	Suitable for	For machine model
1	**1341013**	ø 1/4"M-130 mm	VICTORIA ARDUINO 09000005	ADONIS - ATHENALEVA - ATHENAS - VENUSBAR - VENUSCENTURY

SONDE DI LIVELLO VISACREM
LEVEL PROBES VISACREM
NIVEAUSONDEN VISACREM
SONDAS NIVEL VISACREM

1

Photo	LF Code	Notes	Suitable for	For machine model
1	**3341011**	ø 1/4"M-140 mm	VISACREM 0441/090816	BRAVA - NERA - PALANCA - V6

SONDE DI LIVELLO WEGA
LEVEL PROBES WEGA
NIVEAUSONDEN WEGA
SONDAS NIVEL WEGA

1

2

3

Photo	LF Code	Notes	Suitable for	For machine model
1	**5030757**	ø 1/4"M-100 mm	WEGA WY20261	CONCEPT - VENUS
2	**1341750**	ø 1/4"M-125 mm	WEGA WY20251	AIRY - ATLAS - ATLAS 10 - COLOSSEUM - CONCEPT - ESPRESSA
3	**1341315**	ø 1/4"M-255 mm	WEGA WY20252	MININOVA

We know how to take care of your orders

SPAZZOLINI
BRUSHES
BÜRSTEN
CEPILLOS

1

2

3

4

5

6

Photo	LF Code	Description
1	**1384001**	SHOWER CLEANING BRUSH - SPAZZOLINO PULISCIDOCCE
2	**1384014**	SHOWER CLEANING BRUSH - SPAZZOLINO PULISCIDOCCE
3	**1384712**	SHOWER CLEANING BRUSH BASIC - SPAZZOLINO BASIC
4	**1384711**	SHOWER CLEANING BRUSH EXCLUSIVE - SPAZZOLINO EXCLUSIVE
5	**1384021**	WOODEN SHOWER CLEANING BRUSH - SPAZZOLINO PULISCIDOCCE IN LEGNO
6	**1384002**	BRUSH FOR MAINTENANCE - SPAZZOLINA PER MANUTENZIONE

PENNELLI
BRUSHES
PINSEL
CEPILLOS

1

2

3

4

5

6

Photo	LF Code	Description
1	**1384023**	CLEANING BRUSH 50 mm - PENNELLO PER PULIZIA 50 mm
2	**1384009**	CLEANING BRUSH - PENNELLO PER PULIZIA SAECO/GAGGIA
3	**1384713**	CLEANING BRUSH - PENNELLO PER PULIZIA
4	**1384022**	WOODEN CLEANING BRUSH - PENNELLO PER PULIZIA IN LEGNO
5	**1384020**	WOODEN CLEANING BRUSH - PENNELLO PER PULIZIA IN LEGNO
6	**1384019**	WOODEN CLEANING BRUSH - PENNELLO PER PULIZIA IN LEGNO

SPAZZOLINI
BRUSHES
BÜRSTEN
CEPILLOS

1

2

3

4

Photo	LF Code	Description
1	**1384003**	BLACK SHOWER CLEANING BRUSH - SPAZZOLINO NERO
2	**1384011**	RED SHOWER CLEANING BRUSH - SPAZZOLINO ROSSO
3	**1384006**	BRUSH KIT - KIT SPAZZOLE DI RICAMBIO
4	**1384005**	CLEANING BRUSH F/GRINDING BURRS - SPAZZOLA MACINE

SCOVOLINI
PULL-THROUGH BRUSH
FLASCHENBÜRSTEN
ESCOBILLAS

1 2 3 4 5

Photo	LF Code	ø (mm)
1	**1384701**	3.5
2	**1197008**	---
3	**1384010**	7.5
4	**1384004**	6.0
5	**3394247**	---

SPAZZOLINI
BRUSHES
BÜRSTEN
CEPILLOS

concept-art

1 2 3

Photo	LF Code	external ø (mm)	internal ø (mm)
1	**1384702**	65	53
2	**1384703**	68	50
3	**1384704**	73	56

SPAZZOLINI
BRUSHES
BÜRSTEN
CEPILLOS

concept-art

1 2

Photo	LF Code	Description
1	**1384710**	SHOWER CLEANING BRUSH STEAM - SPAZZOLINO STEAM
2	**1384708**	PLASTIC BRUSH - SPAZZOLA IN PLASTICA

SPESSORI
SPACERS
DICKEN
ESPESORES

1

2

3

Photo	LF Code	Dimensions (mm)	Material
1	**1190101**	ø 64x53x0.7	PAPER/CARTA
1	**1190021**	ø 66x58x0.8	PAPER/CARTA
1	**1190006**	ø 69x57x0.8	PAPER/CARTA
1	**1190005**	ø 70x57x0.5	PAPER/CARTA
1	**1190051**	ø 70x57x0.8	PAPER/CARTA
1	**1190011**	ø 72x58x0.8	PAPER/CARTA
1	**1190001**	ø 73x59x0.8	PAPER/CARTA
2	**1190007**	ø 64x53x1.0	EPDM
2	**1190003**	ø 70x57x1.0	EPDM
2	**1190002**	ø 73x59x1.0	EPDM
3	**1190004**	ø 71x58x0.6	PAPER/VITON

LF Group

Order your spare parts **online!**

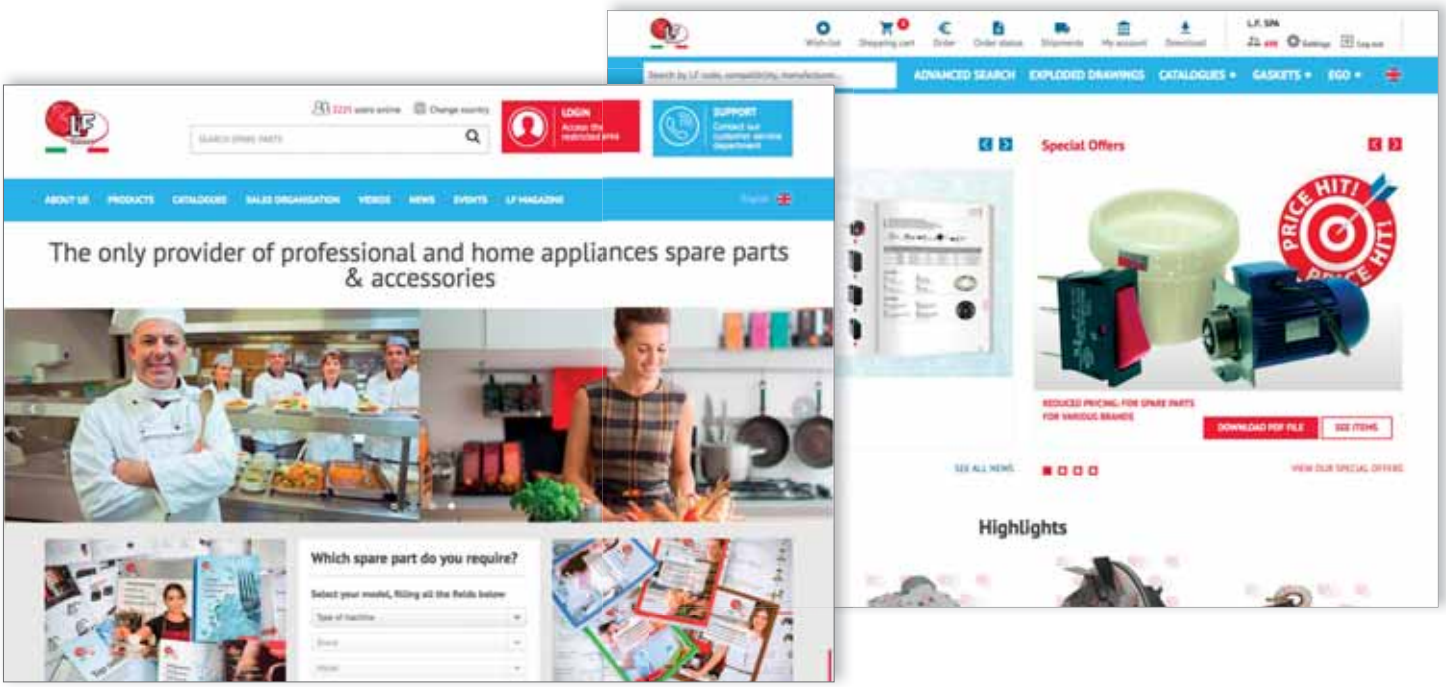

Ask for your personal login details to access our **webshop**

www.lfspareparts724.com

Spruzzatori gruppi caffè
Nozzles for coffee groups
Düsen für Kaffeegruppen
Inyectores grupos café

SPRUZZATORI GRUPPI CAFFE
COFFEE GROUPS SPRINKLERS
SPRITZDÜSEN KAFFEEGRUPPEN
ROCIADORES GRUPOS CAFÉ

1

2

3

4

5

6

Photo	LF Code	Dimensions	Hole	Suitable for	For machine model
1	**1501565**	ø 21 mm M5x1	---	FAEMA 4161133848	COMPACT - DUE - ELITE - ENOVA - EXPRESS - E61
1	**1501565**	ø 21 mm M5x1	---	FUTURMAT 02476109	---
2	**1510004**	ø 21 mm M5x1	---	CASADIO 457342000	DIECIA - DIECIS - DAFNE
2	**1510004**	ø 21 mm M5x1	---	CIMBALI 457-342-000	M27 2008
2	**1510004**	ø 21 mm M5x1	---	FAEMA 457342000	DUESMART - EMBLEMA - ENOVA - E61 - SMARTRESTY
3	**1501560**	ø 21 mm M6x1	---	VIBIEMME RACCSPGRKO	EVOLUTION - KOMETA - LOLLO - MINIMAX - SILVER
4	**1501007**	ø 30 mm M10x1	M5	MCE 27105000	START
4	**1501007**	ø 30 mm M10x1	M5	ORCHESTRALE D27105000	ETNICA - PHONICA
4	**1501007**	ø 30 mm M10x1	M5	WEGA WY27105000	AIRY - ATLAS - COLOSSEUM - COMBI NOVA - ESPRESSA - START
5	**1501561**	ø 30 mm M10x1	---	BEZZERA 7479941	GALATEA - GALATEA DOMUS - GIULIA - UNICA
5	**1501561**	ø 30 mm M10x1	---	BFC 0520070	CLASSICA - DELUX - GALILEO - IMOLA - JUNIOR - LA VITTORIA - LIRA
5	**1501561**	ø 30 mm M10x1	---	BIANCHI 43051216	LUCIA - SARA - SOFIA
5	**1501561**	ø 30 mm M10x1	---	BRASILIA 04089.0.00.04	GRADISCA
5	**1501561**	ø 30 mm M10x1	---	ECM C229901128	GIOTTO - LAURA - VENEZIANO
5	**1501561**	ø 30 mm M10x1	---	ECM MANUFACTURE C229901128	CLASSIKA II - ELEKTRONICA II PROFI - ELEKTRONIKA II PROFI
5	**1501561**	ø 30 mm M10x1	---	EXPOBAR CTAV1-11	EB61 - OFFICE
5	**1501561**	ø 30 mm M10x1	---	FAEMA	E61
5	**1501561**	ø 30 mm M10x1	---	FIAMMA RST 5.0.025.0009	ATLANTIC - MARINA - PRESTIGE
5	**1501561**	ø 30 mm M10x1	---	FIORENZATO C.S A2200170	BRICOLETTA - COLOMBINA - DUCALE - FENICE - LIDO - VOLANTE
5	**1501561**	ø 30 mm M10x1	---	FUTURA 200134	F100
5	**1501561**	ø 30 mm M10x1	---	FUTURMAT 02012904	ARIETE - CUSTOM - F3 - RIMINI
5	**1501561**	ø 30 mm M10x1	---	GAGGIA SPAGNA 02012904	BELLA - G6 - KB
5	**1501561**	ø 30 mm M10x1	---	GRIMAC 1201300006-GR762	ECLISSE - MIA - TEN - TWENTY - ZOLA I - ZOLA II
5	**1501561**	ø 30 mm M10x1	---	ITALCREM 02012904	IT4
5	**1501561**	ø 30 mm M10x1	---	MAIRALI 02012904	ARIANNE
5	**1501561**	ø 30 mm M10x1	---	PAVONI	BART
5	**1501561**	ø 30 mm M10x1	---	PROMAC 80230080	COMPACT - GREEN
5	**1501561**	ø 30 mm M10x1	---	RENEKA AT7479941	AMICI - ATALANTE
5	**1501561**	ø 30 mm M10x1	---	ROYAL 0520070	DIADEMA - SYNCHRO
5	**1501561**	ø 30 mm M10x1	---	SAB TM-SPR8F400	ELLIPSE - E96 - MODERNA
5	**1501561**	ø 30 mm M10x1	---	SANREMO 10052141	AMALFI - CAPRI - MILANO LX - PISA - TORINO - TREVISO
5	**1501561**	ø 30 mm M10x1	---	SCALA C-0318	BUTTERFLY - CARMEN - EROICA
5	**1501561**	ø 30 mm M10x1	---	VFA	ELITE - MAGESTIC - SPLENDOR
5	**1501561**	ø 30 mm M10x1	---	VIBIEMME RACCSPGR	CHIMAERA - DOMOBAR - DOSAPLUS - MERCURY - REPLICA
5	**1501561**	ø 30 mm M10x1	---	VISACREM 02012904	BRAVA - V6
5	**1501561**	ø 30 mm M10x1	---	WEGA WY27105	AIRY - ATLAS - ATLAS10 - NOVA - NOVECENTO - ORION ECO - POLARIS
6	**1501568**	ø 30 mm M10x1	M5	PAVONI 314098	P UNO - P TRE
6	**1501014**	ø 30 mm M9.6x1	M5	BRUGNETTI/AURORA 000183	ALEXIA - C

SPRUZZATORI GRUPPI CAFFE
COFFEE GROUPS SPRINKLERS
SPRITZDÜSEN KAFFEEGRUPPEN
ROCIADORES GRUPOS CAFÉ

1 2 3 4 5

Photo	LF Code	Dimensions	Hole	Suitable for	For machine model
1	**1349803**	ø 21 mm	ø 6 mm	PROMAC 25139001	CLUB
1	**1349803**	ø 21 mm	ø 6 mm	RANCILIO 25139001	CLASSE10 - CLASSE6 - CLASSE7 - CLASSE8 - CLASSE9 - EPOCA
2	**1510011**	ø 30 mm	ø 5 mm	CARIMALI 22.05049.NP	---
3	**1501008**	ø 30 mm	ø 6 mm	PAVONI 3141537	BAR - BART - PUB
3	**1501569**	ø 30 mm	ø 5 mm	PAVONI 3141287	BAR - BART - PUB
4	**1081005**	ø 35 mm	M5x1	CASADIO 457037048	VENTI
4	**1081005**	ø 35 mm	M5x1	CIMBALI 457-037-048	DOMUS - M20 - M21 - M24 - M27 - M28 - M30 - M31 - M39
4	**1081005**	ø 35 mm	M5x1	FAEMA 457037048	E98COMPACT - FAEMART
5	**5070041**	---	---	DELONGHI 621986	ECI341.BK - EC221.B - EC250.B - EC680.M - EC820.B - EC850.M

SPRUZZATORI GRUPPI CAFFE
COFFEE GROUPS SPRINKLERS
SPRITZDÜSEN KAFFEEGRUPPEN
ROCIADORES GRUPOS CAFÉ

1 2 3 4 5

Photo	LF Code	Dimensions	Hole	Suitable for	For machine model
1	**1510006**	ø 10.5 mm M12x1 H12	---	SPINEL SR.000.021.001	DUELUX - DUETTOLUX - ESSE - MINIMINI - MINIMINILUX
2	**1510001**	ø 11.0 mm M12x1 H12	---	GRIMAC 1300300003-MG184	AMBRA - DADAVAPORDOUBLE - NEWCIALDAVAPOR - NUVOLA - OPALE
3	**1510003**	ø 12.0 mm M12x1 H13	---	PAVONI 0R11180130	MICROPOD
3	**1510003**	ø 12.0 mm M12x1 H13	---	RDL 11180130	MAXI - MINI - SWEET
4	**1501301**	M20x1.5	M5	ASTORIA/CMA 25739500	DIVINA - PERLA 4D
5	**5048106**	M13x1.5	---	GAGGIA EF0047/A	CAREZZA - EVOLUTION

SPRUZZATORI GRUPPI CAFFE
NOZZLES FOR COFFEE GROUPS
WASSERVERTEILER FÜR AUSLAUFGRUPPEN
ROCIADORES PARA GRUPOS SALIDA

1

2

3

4

5

6

Photo	LF Code	Dimensions	Hole	Suitable for	For machine model
1	**1501576**	---	ø 7 mm	NUOVA SIMONELLI 07300124	MACCUP
2	**1501010**	M10	---	EXPOBAR 30200040	DIAMANT - EB61 - ELEN - G10 - MARKUS - MARKUS SILVER
3	**1501002**	M10x1.5	M4	EXPOBAR 30800070	ELEN
4	**1510005**	M25x1.5 H31.5	---	SPINEL SR.000.021.000	DUELUX - DUETTOLUX - ESSE - ESSELUX - FLAVIA - LOLA
5	**1510013**	M30x1.5 H26.5	---	LA PICCOLA B15	CECILIA - SARA
6	**1510012**	ø 14 mm M8x1.5 H23	---	LA PICCOLA B04	PICCOLA

SPRUZZATORI GRUPPI CAFFE
NOZZLES FOR COFFEE GROUPS
WASSERVERTEILER FÜR AUSLAUFGRUPPEN
ROCIADORES PARA GRUPOS SALIDA

1

2

3

4

5

6

Photo	LF Code	Dimensions	Hole	Suitable for	For machine model
1	**1501300**	ø 31.5 mm M18x2	M5	ASTORIA/CMA 25422008	PLUS4YOU
1	**1501300**	ø 31.5 mm M18x2	M5	WEGA WY25422008	CONCEPT52 - CONCEPT56
2	**1510008**	ø 14 mm M12x1	M4	ISOMAC IS000838	GIADA - MAVERICK
3	**1510010**	ø 10,8 mm M10x1 H12,5	---	DELONGHI 6213271429	ECI341 - ECOV311 - ECP31.21 - ECP33.21
3	**5070037**	ø 10,8 mm M10x1 H10	---	DELONGHI 6213210451	ECOV310.BK - ECO310.B - EC146.B - EC151.B - EC153.B
4	**1510009**	ø 12 mm M12x1 H18	---	GAGGIA 11023968	GRAN GAGGIA
4	**1510009**	ø 12 mm M12x1 H18	---	SAECO 11023968	POEMIA
4	**5061349**	ø 12 mm M12x1 H18	---	GAGGIA 11001196	CUBIKA PLUS
4	**1510014**	ø 12 mm M12x1 H17	---	GAGGIA 11000996	NEW ESPRESSO 06 DOSE - NEW ESPRESSO 06 PURE & COLOR
4	**5061349**	ø 12 mm M12x1 H18	---	PAVONI 0P11001196	ECN - ESG
4	**5061349**	ø 12 mm M12x1 H18	---	SAECO 11001196	ARMONIA
4	**1510014**	ø 12 mm M12x1 H17	---	SAECO 11000996	NINA - NINA BAR
5	**1510007**	ø 11 mm M6x1	---	QUICK MILL KIT0900SD	0820
6	**1510015**	ø 15 mm M11.5x2	---	BIALETTI 912990430	MOKONA CF40

STRUMENTI DI MISURA
MEASURING TOOLS
MESSINSTRUMENTE
INSTRUMENTOS DE MEDIDA

1

2

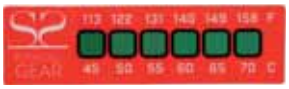
3

4

5

Photo	LF Code	Notes	Features
1	**1394554**	ANALOG THERMOMETER - TERMOMETRO	0+100°C - ø 45 mm
2	**1394553**	ANALOG THERMOMETER - TERMOMETRO	0+100°C - ø 25 mm
3	**1394004**	ADHESIVE THERMOMETER - TERMOMETRO ADESIVO	45+70°C
4	**1446006**	DIGITAL TIMER COUNTDOWN - TEMPORIZZA-TORE CONTO ALLA ROVESCIA	99' 59"
5	**2102161**	DIGITAL TIMER COUNTDOWN - TEMPORIZZA-TORE CONTO ALLA ROVESCIA	99' 59"

STRUMENTI DI MISURA
MEASURING TOOLS
MESSINSTRUMENTE
INSTRUMENTOS DE MEDICIÓN

1

2

3

4

5

Photo	LF Code	Notes	Features
1	**3394204**	THERMOMETER - TERMOMETRO	-50+300°C
2	**3394966**	THERMOMETER - TERMOMETRO	-50+150°C/-58+300°F
3	**3394200**	THERMOMETER - TERMOMETRO	-50+260°C/-58+500°F
4	**3394450**	THERMOMETER - TERMOMETRO	-50+800°C/-58+1472°F
5	**3394500**	MULTIMETER DIGITAL - MULTIMETRO DIGI-TALE	MULTIFUNCTION

TERMOSTATI
THERMOSTATS
THERMOSTATE
TERMOSTATOS

1

2

3

4

Photo	LF Code	Features	Suitable for	For machine model
1	**5024998**	147°C	PAVONI 436042	BAR
2	**3444142**	150°C	BEZZERA 7434001	B2000 - ELLISSE
2	**3444142**	150°C	FAEMA 3231133006	E91 - E92 - E97 - E98 - DUE - SMART
1	**1444509**	169°C	ASTORIA/CMA 20300015	PLUS4YOU
1	**1444509**	169°C	CARIMALI 95.01594	ETABETAV2 - E9 ESPRESSO - KIKKO - KIKKO2 - TEMA STYLE
1	**1444509**	169°C	CASADIO 531193100	DODICI
1	**1444509**	169°C	CIMBALI 531-193-100	M20 - M21 - M27 - M28 - M29 - M30 - M31 - M32 - M39
1	**1444509**	169°C	ELEKTRA 02790035	CLASSIC - MODERN - SIXTIES
1	**1444509**	169°C	FAEMA 531193100	DUE SMART - ELITE - EMBLEMA - ENOVA - E61 - E98 COMPACT
1	**1444509**	169°C	FIORENZATO CS A1400032	PIAZZASANMARCO
1	**1444509**	169°C	FUTURA 400015	F100
1	**1444509**	169°C	FUTURMAT 07476906	CUSTOM - E61 - F3 - PALANCA - RIMINI
1	**1444509**	169°C	GAGGIA SPAGNA 07476906	BELLA - G6 - KB - NERA - PALANCA
1	**1444509**	169°C	ITALCREM 07476906	CAPRI - IT4 - PALANCA
1	**1444509**	169°C	LAVAZZA 10067254	LB4700 - LB4700R - LB4701R
1	**1444509**	169°C	MAIRALI 07476906	ARIANNE - GIULIETTA - PALANCA
1	**1444509**	169°C	MCE 20300015	START
1	**1444509**	169°C	ORCHESTRALE D20300015	ETNICA - PHONICA
1	**1444509**	169°C	PROMAC 34200095	GREEN - COMPACT - CLUB
1	**1444509**	169°C	QUICK MILL TE064	0996 ACHILLE
1	**1444509**	169°C	SAN MARCO 108463	105 - 100 - 85 - 95 - LEVA - 105 NEW
1	**1444509**	169°C	SANREMO 10111015	AMALFI - CAPRI - MILANO LX - PISA - TORINO - VENEZIA
1	**1444509**	169°C	SPAZIALE 01477	NEW - RAPID - SELETRON - SPAZIO - SUPER 3000 - S1 VIVALDI
1	**1444509**	169°C	VISACREM 07476906	BRAVA - NERA - PALANCA - V6
1	**1444509**	169°C	WEGA WY20300015	CONCEPT
1	**3444442**	170°C	GAGGIA 5024007000	GD - GE - LCD - XD - XE
1	**3444442**	170°C	LAVAZZA 10062179	LB4800
1	**3444442**	170°C	SAECO WGA5001013000	AROMA
1	**2111485**	177°C	SCALA C-0457	CARMEN - EROICA - IRIS - NORMA
3	**1444004**	187°C	CIMBALI 531-191-800	JUNIOR - M29 - M30 - M32 - M39 - M39GT
3	**1444004**	187°C	DALLA CORTE B-00-0210	---
3	**1444004**	187°C	FAEMA 531191800	ELITE - EMBLEMA - ENOVA - E61 - E98 COMPACT - SMART
3	**1444004**	187°C	LAVAZZA 10066261	LB4711
3	**1444004**	187°C	PROMAC 34200096	CLUB - COMPACT - GREEN
3	**1444004**	187°C	RANCILIO 34200096	CLASSE10 - S20
3	**1444004**	187°C	SANREMO 10111012	AMALFI - CAPRI - MILANO LX - PISA - TORINO - VENEZIA
3	**1444004**	187°C	SPAZIALE 08019	S5 COMPACT
4	**2103907**	160°C	DALLA CORTE B-00-0023	DCPRO - EVO2

TERMOSTATI
THERMOSTATS
THERMOSTATE
TERMOSTATOS

1

2

3

4

5

6

Photo	LF Code	Features	Suitable for	For machine model
1	**1444048**	153°C	GAGGIA 5008006000	TS
1	**1444002**	177°C	ELEKTRA 02789035	MICROCASA - SIXTIES
2	**5047881**	170°C	CASADIO 531194710	DIECIA - DIECIS - VENTI
2	**5047881**	170°C	CIMBALI 531-194-710	CIMBALI M24 - M39TE
2	**5047881**	170°C	FAEMA 531194710	EMBLEMA RESTYLING - ENOVA - TEOREMA
3	**5039982**	85°-135°C	VICTORIA ARDUINO 40901001	VENUSFAMILY
4	**1444049**	TR/86	VIBIEMME ELETTEDOMJU2B	DOMOBAR - DOMOBARJUNIOR
5	**5078576**	TC - 155°C	BFC 5013005	CLASSICA - DELUX - GALILEO - GRANDOGE - IMOLA - JUNIOR EXTRA
5	**5078576**	TC - 155°C	ROYAL 5013005	DIADEMA - DOGARESSA - SYNCHRO - TECNICA - VALLELUNGA
6	**2102106**	169°C	PROMAC 34200097	GREEN
6	**2102106**	169°C	RANCILIO 34200097	CLASSE10 - CLASSE11 - CLASSE6 - CLASSE7 - CLASSE8 - CLASSE9 - EPOCA

TERMOSTATI
THERMOSTATS
THERMOSTATE
TERMOSTATOS

1

2

3

Photo	LF Code	Features	Suitable for	For machine model
1	**1444401**	130°C	SPAZIALE 11168+11169	PROFESSIONALE
2	**3444005**	0-120°C	ELEKTRA 00659035	MINIVERTICALE
3	**3444004**	0-90°C	ASTORIA/CMA 20314	SIBILLA
3	**3444004**	0-90°C	WEGA WY20314	VENUS - POLARIS

TERMOSTATI
THERMOSTATS
THERMOSTATE
TERMOSTATOS

1

2

3

4

Photo	LF Code	Features	Suitable for	For machine model
1	**1444503**	---	FAEMA 4231112698	E91 - E92 - E97 - E98 - DUE - SMART
2	**1444018**	---	CONTI 402500	CLUB - TWIN STAR2 - XEOS2
3	**1444505**	M10x1	FAEMA	E91 - E92 - E97 - E98 - DUE - SMART
4	**1444504**	---	FAEMA	E91 - E92 - E97 - E98 - DUE - SMART

TERMOSTATI
THERMOSTATS
THERMOSTATE
TERMOSTATOS

1

2

Photo	LF Code	Features	Suitable for	For machine model
1	**1444005**	165°C - 400V	PROMAC 34200093	CLUB - COMPACT - GREEN
1	**1444005**	165°C - 400V	RANCILIO 34200093	EPOCA - MILLENNIUM
2	**3444230**	165°C - 270V	PROMAC 34200092	CLUB - COMPACT - GREEN
2	**3444230**	165°C - 270V	RANCILIO 34200092	EPOCA - MILLENNIUM - S24 - S26 - S27

TERMOSTATI
THERMOSTATS
THERMOSTATE
TERMOSTATOS

1

Photo	LF Code	Features	Suitable for	For machine model
1	**1444205**	145°C	ASTORIA/CMA 20301	---

TERMOSTATI A CONTATTO ASCASO
CONTACT THERMOSTATS ASCASO
ANLEGETHERMOSTATE ASCASO
TERMOSTATOS A CONTACTO ASCASO

1

Photo	LF Code	Temperature °C	Suitable for	For machine model
1	**1443090**	165	ASCASO I..543	DREAM PM (+09/2012) - ARC PM (+09/2012) - BASIC PM (+09/2012)

TERMOSTATI A CONTATTO ASTORIA/CMA
CONTACT THERMOSTATS ASTORIA/CMA
ANLEGETHERMOSTATE ASTORIA/CMA
TERMOSTATOS DE CONTACTO ASTORIA/CMA

1

2

3

Photo	LF Code	Temperature °C	Suitable for	For machine model
1	**1443206**	100	ASTORIA/CMA 20300009	PRIMA
2	**1444206**	145	ASTORIA/CMA 20304	CK - CKE - CKX - CKXE - GLORIA P4Y - PLUS4YOU
3	**1443207**	180	ASTORIA/CMA 20300011	LUNA - PRIMA

TERMOSTATI A CONTATTO BEZZERA
CONTACT THERMOSTATS BEZZERA
ANLEGETHERMOSTATE BEZZERA
TERMOSTATOS DE CONTACTO BEZZERA

1

2

Photo	LF Code	Temperature °C	Suitable for	For machine model
1	**1443079**	95	BEZZERA 7634808	BZ07 - BZ09 - BZ10 - BZ13 - B2009 - B2013 - ELLISSE NEW
2	**1444511**	130	BEZZERA 7634813	BZ02 - BZ07 - BZ35 - BZ40 - BZ99 - PROEX

TERMOSTATI A CONTATTO BIALETTI
CONTACT THERMOSTATS BIALETTI
ANLEGETHERMOSTATE BIALETTI
TERMOSTATOS A CONTACTO BIALETTI

1

2

Photo	LF Code	Temperature °C	Suitable for	For machine model
1	**5089566**	105	BIALETTI 912200221	MOKONA CF40
2	**1443089**	130	BIALETTI 912200231	MOKONA CF40

TERMOSTATI A CONTATTO BIANCHI
CONTACT THERMOSTATS BIANCHI
ANLEGETHERMOSTATE BIANCHI
TERMOSTATOS DE CONTACTO BIANCHI

1

Photo	LF Code	Temperature °C	Suitable for	For machine model
1	**1443067**	75	BIANCHI 25014936-01	SARA

TERMOSTATI A CONTATTO BRASILIA
CONTACT THERMOSTATS BRASILIA
ANLEGETHERMOSTATE BRASILIA
TERMOSTATOS DE CONTACTO BRASILIA

1

2

3

Photo	LF Code	Temperature °C	Suitable for	For machine model
1	**1444003**	95	BRASILIA 06524.2.00.08	MINIPODS
1	**1443005**	98	BRASILIA 14072.2.00.08	PORTOFINO STUDIO
1	**1443011**	100	BRASILIA 09415.2.00.08	CLUB - LADY
1	**1443400**	107	BRASILIA 08701.2.00.08	CLUB - LADY
2	**3443026**	110	BRASILIA 10157.2.00.08	CLUB - LADY
1	**3443081**	125	BRASILIA 06525.2.00.08	MINIPODS
1	**1443004**	145	BRASILIA 08702.2.00.08	LADY
3	**1443002**	165	BRASILIA 08703.2.00.08	CLUB - LADY

TERMOSTATI A CONTATTO CIMBALI
CONTACT THERMOSTATS CIMBALI
ANLEGETHERMOSTATE CIMBALI
TERMOSTATOS DE CONTACTO CIMBALI

1

Photo	LF Code	Temperature °C	Suitable for	For machine model
1	**1443065**	160	CIMBALI 531-104-600	M39GT

TERMOSTATI A CONTATTO CONTI
CONTACT THERMOSTATS CONTI
ANLEGETHERMOSTATE CONTI
TERMOSTATOS DE CONTACTO CONTI

1

2

3

Photo	LF Code	Temperature °C	Suitable for	For machine model
1	**1443017**	85	CONTI 411308	TWIN STAR2
2	**1444016**	160	CONTI 410634	CLUB - TWIN STAR2 - XEOS2
3	**1444017**	230	CONTI 410633	TWIN STAR2

TERMOSTATI A CONTATTO DELONGHI
CONTACT THERMOSTATS DELONGHI
ANLEGETHERMOSTATE DELONGHI
TERMOSTATOS DE CONTACTO DELONGHI

1

2

3

4

5

6

Photo	LF Code	Temperature °C	Suitable for	For machine model
1	**1443075**	105	DELONGHI 5232100600	ECOV310AZ - EC155E - C221.B - EC250.B - EC300M
1	**1443068**	125	DELONGHI 5232101300	ECOV310AZ - EC155E - C221.B - EC250.B - EC300M
2	**D443001**	145	DELONGHI 5232100000	BCO130 - BCO260 - BCO261 - BCO320 - BCO410 - BCO420
2	**5054438**	170	DELONGHI 5232104500	EAM3300S - EAM3400 - EAM4300 - ESAM4300 - ESAM4400
3	**D444052**	315	DELONGHI 521540	BARM100 - BARM110 - EC650 - EC750
4	**1443069**	318	DELONGHI 5213213711	ECAM26.455.C
5	**5054432**	318	DELONGHI 5232105000	EAM4300 - ESAM6650 - ESAM3500 - ESAM4300 - ESAM6600
6	**D444005**	318	DELONGHI 5213215191	LATTISSIMA PLUS - LATTISSIMA PRO - LATTISSIMA TOUCH

TERMOSTATI A CONTATTO DIDIESSE
CONTACT THERMOSTATS DIDIESSE
ANLEGETHERMOSTATE DIDIESSE
TERMOSTATOS DE CONTACTO DIDIESSE

1

2

Photo	LF Code	Temperature °C	Suitable for	For machine model
1	**1443002**	165	DIDIESSE FR020	FROG
2	**1444003**	95	DIDIESSE FR019	FROG

TERMOSTATI A CONTATTO ECM
CONTACT THERMOSTATS ECM
ANLEGETHERMOSTATE ECM
TERMOSTATOS DE CONTACTO ECM

1

Photo	LF Code	Temperature °C	Suitable for	For machine model
1	**1443070**	135	ECM C199901550	GIOTTO - VENEZIANO

TERMOSTATI A CONTATTO ECM MANUFACTURE
CONTACT THERMOSTATS ECM MANUFACTURE
ANLEGETHERMOSTATE ECM MANUFACTURE
TERMOSTATOS DE CONTACTO ECM MANUFACTURE

1

Photo	LF Code	Temperature °C	Suitable for	For machine model
1	**1443070**	135	ECM MANUFACTURE C199901550	ELEKTRONIKA II PROFI - MECHANIKA

TERMOSTATI A CONTATTO ELEKTRA
CONTACT THERMOSTATS ELEKTRA
ANLEGETHERMOSTATE ELEKTRA
TERMOSTATOS DE CONTACTO ELEKTRA

1

2

3

Photo	LF Code	Temperature °C	Suitable for	For machine model
1	**1443401**	135	ELEKTRA 03329035	---
2	**1444001**	140	ELEKTRA 01194035	MICROCASA
3	**1443002**	165	ELEKTRA 00702035	MINIVERTICALE - NIVOLA

TERMOSTATI A CONTATTO EXPOBAR
CONTACT THERMOSTATS EXPOBAR
ANLEGETHERMOSTATE EXPOBAR
TERMOSTATOS DE CONTACTO EXPOBAR

1

Photo	LF Code	Temperature °C	Suitable for	For machine model
1	**1444034**	145	EXPOBAR 10200110	EXPRESSO - MINICOMPACT - MONROC - OFFICE

TERMOSTATI A CONTATTO FAEMA
CONTACT THERMOSTATS FAEMA
ANLEGETHERMOSTATE FAEMA
TERMOSTATOS DE CONTACTO FAEMA

1

2

Photo	LF Code	Temperature °C	Suitable for	For machine model
1	**3443071**	135	FAEMA 3231118962	COMPACT - DUE - DUEA - EXPRESS - E91 - E92
2	**1443065**	160	FAEMA 531104600	FAEMART

TERMOSTATI A CONTATTO FIAMMA RST
CONTACT THERMOSTATS FIAMMA RST
ANLEGETHERMOSTATE FIAMMA RST
TERMOSTATOS DE CONTACTO FIAMMA RST

1

Photo	LF Code	Temperature °C	Suitable for	For machine model
1	**1444511**	130	FIAMMA RST 4.0.000.0250	ATLANTIC - MARINA - PRESTIGE

TERMOSTATI A CONTATTO FIORENZATO CS
CONTACT THERMOSTATS FIORENZATO CS
ANLEGETHERMOSTATE FIORENZATO CS
TERMOSTATOS DE CONTACTO FIORENZATO CS

1

2

3

Photo	LF Code	Temperature °C	Suitable for	For machine model
1	**3443026**	110	FIORENZATO A1400045	COLOMBINA
2	**1443066**	130	FIORENZATO A1400044	COLOMBINA
3	**1443013**	152	FIORENZATO A1400035	BRICOLETTA - COLOMBINA - DUCALE - VOLANTE

TERMOSTATI A CONTATTO GAGGIA
CONTACT THERMOSTATS GAGGIA
ANLEGETHERMOSTATE GAGGIA
TERMOSTATOS DE CONTACTO GAGGIA

1

2

3

4

5

Photo	LF Code	Temperature °C	Suitable for	For machine model
1	**1443011**	100	GAGGIA WGADM1561	GD - GE - LCD - TS - XD - XE
1	**1443400**	107	GAGGIA DM1168	CAREZZA - CLASSIC - EVOLUTION
1	**1443004**	145	GAGGIA DM1288	CAREZZA - CLASSIC - EVOLUTION
2	**1443007**	127	GAGGIA S436040	G105 - G106
3	**5500425**	127	GAGGIA 189425100	GRANGAGGIA
3	**1443036**	95	GAGGIA 189422000	GRAN GAGGIA
3	**1443083**	175	GAGGIA 12001034	ACCADEMIA - BRERA - PLATINUM EVENT
3	**5071524**	190	GAGGIA 12001033	ACCADEMIA - CAREZZA DELUXE - UNICA
4	**1443040**	175	GAGGIA 189428200	SYNCRONY - TITANIUM
5	**5067822**	175	GAGGIA 189428300	SYNCRONY LOGIC - TITANIUM

TERMOSTATI A CONTATTO GRIMAC
CONTACT THERMOSTATS GRIMAC
ANLEGETHERMOSTATE GRIMAC
TERMOSTATOS DE CONTACTO GRIMAC

1

2

3

4

Photo	LF Code	Temperature °C	Suitable for	For machine model
1	**1444506**	90	GRIMAC 1161000002-MG010	DADAVAPORDOUBLE - NUVOLA - OPALE - TERRY
1	**1444003**	95	GRIMAC 1161000003-MG011/2	AMBRA - NUVOLA - OPALE - TERRY
2	**5027936**	125	GRIMAC 1161000001-MG009	---
2	**1444521**	155	GRIMAC 1161000013-G611/1	DADAVAPORDOUBLE - NUVOLA - OPALE
3	**1444206**	145	GRIMAC 1161000014-MG707	AMBRA - NUVOLA - OPALE - TERRY
4	**1443034**	250	GRIMAC 1161000008-MG564	NUVOLA - OPALE

TERMOSTATI A CONTATTO ISOMAC
CONTACT THERMOSTATS ISOMAC
ANLEGETHERMOSTATE ISOMAC
TERMOSTATOS DE CONTACTO ISOMAC

1

2

Photo	LF Code	Temperature °C	Suitable for	For machine model
1	**1443011**	100	ISOMAC IS000281	MAVERICK - VENUS
1	**1443401**	135	ISOMAC IS000284	MAVERICK - VENUS
2	**1443002**	165	ISOMAC IS000190	VENUS

TERMOSTATI A CONTATTO JURA
CONTACT THERMOSTATS JURA
ANLEGETHERMOSTATE JURA
TERMOSTATOS DE CONTACTO JURA

1

Photo	LF Code	Temperature °C	Suitable for	For machine model
1	**1443084**	115	JURA 63190	E10 - E20 - E30 - E40 - E50 - E60 - E70 - F5 - F50 - F9 - F90

Termostati a contatto
Contact thermostats
Anlegethermostate
Termostatos de contacto

TERMOSTATI A CONTATTO LAVAZZA
CONTACT THERMOSTATS LAVAZZA
ANLEGETHERMOSTATE LAVAZZA
TERMOSTATOS DE CONTACTO LAVAZZA

1

2

3

Photo	LF Code	Temperature °C	Suitable for	For machine model
1	**1443067**	75	LAVAZZA 10084256	LB4600
2	**1443063**	143	LAVAZZA 10079227	EL3100 - EL3200
3	**1443013**	150	LAVAZZA 10066402	LB2800 - LB4100 - LB4103

TERMOSTATI A CONTATTO MARZOCCO
CONTACT THERMOSTATS MARZOCCO
ANLEGETHERMOSTATE MARZOCCO
TERMOSTATOS DE CONTACTO MARZOCCO

1

2

3

Photo	LF Code	Temperature °C	Suitable for	For machine model
1	**1444511**	130	MARZOCCO L276/B	FB70 - FB80 - GB5 - LINE - MISTRAL
2	**1443088**	130	MARZOCCO L276.01	GB5 - FB80
3	**1444535**	135	MARZOCCO L276	FB70 - FB80 - GB5 - GS3 - LINEA - MISTRAL

TERMOSTATI A CONTATTO NUOVA SIMONELLI
CONTACT THERMOSTATS NUOVA SIMONELLI
ANLEGETHERMOSTATE NUOVA SIMONELLI
TERMOSTATOS DE CONTACTO NUOVA SIMONELLI

1

2

3

4

Photo	LF Code	Temperature °C	Suitable for	For machine model
1	**1443006**	55	NUOVA SIMONELLI 09500006	APPIA - AURELIA
2	**1443055**	125	NUOVA SIMONELLI 09500002	JAZZ
3	**1444535**	135	NUOVA SIMONELLI 09500004	APPIA - AURELIA - JAZZ - OSCAR - PREMIER - PROGRAM
4	**1444601**	150	NUOVA SIMONELLI 09500011	MICROBAR - PRONTOBAR

TERMOSTATI A CONTATTO PAVONI
CONTACT THERMOSTATS PAVONI
ANLEGETHERMOSTATE PAVONI
TERMOSTATOS DE CONTACTO PAVONI

1

2

3

4

Photo	LF Code	Temperature °C	Suitable for	For machine model
1	**1443036**	95	PAVONI 0P189422000	ECN - ESG
1	**5500425**	127	PAVONI 0P189425100	ESPRESSO INN - ESPRESSO SI - EUROBAR
2	**1443007**	127	PAVONI 436040	EUROPICCOLA - PROFESSIONAL - ROMANTICA - STRADIVARI
3	**1444206**	145	PAVONI 0R14280010	MICROPOD
3	**1443002**	165	PAVONI 436055	---
4	**1443040**	175	PAVONI OP189428200	EDL - EUROBARDELUXE

TERMOSTATI A CONTATTO QUICK MILL
CONTACT THERMOSTATS QUICK MILL
ANLEGETHERMOSTATE QUICK MILL
TERMOSTATOS DE CONTACTO QUICK MILL

1

2

3

Photo	LF Code	Temperature °C	Suitable for	For machine model
1	**1443081**	110	QUICK MILL TE0900CR	03035 PEGASO - 0820 - 0835
2	**1443080**	135	QUICK MILL TES0800V	03035 PEGASO - 0820
3	**1443082**	160	QUICK MILL TE0980	0980 ANDREJA

TERMOSTATI A CONTATTO RANCILIO
CONTACT THERMOSTATS RANCILIO
ANLEGETHERMOSTATE RANCILIO
TERMOSTATOS DE CONTACTO RANCILIO

1

2

3

Photo	LF Code	Temperature °C	Suitable for	For machine model
1	**1443206**	100	RANCILIO 34200056	AUDREY - NANCY - SILVIA
2	**1444007**	140	RANCILIO 34200055	AUDREY - NANCY - SILVIA
3	**1443002**	165	RANCILIO 34200058	BETSY - SILVIA - S20

TERMOSTATI A CONTATTO RDL
CONTACT THERMOSTATS RDL
ANLEGETHERMOSTATE RDL
TERMOSTATOS DE CONTACTO RDL

1

2

Photo	LF Code	Temperature °C	Suitable for	For machine model
1	**1444506**	90	RDL 14280020	MAXI - MINI - SWEET
1	**1443010**	93	RDL 14280030	MAXI - MINI - SWEET
1	**1444003**	95	RDL 14280040	MAXI - MINI - MINICAP - SWEET
1	**1443005**	98	RDL 14280050	MAXI - MINI - SWEET
2	**1444206**	145	RDL 14280010	MAXI - MINI - SWEET
2	**1443002**	165	RDL 14280070	MINI

TERMOSTATI A CONTATTO SAECO
CONTACT THERMOSTATS SAECO
ANLEGETHERMOSTATE SAECO
TERMOSTATOS DE CONTACTO SAECO

1

2

3

4

5

Photo	LF Code	Temperature °C	Suitable for	For machine model
1	**1443046**	90	SAECO 189421400	SUPERAUTOMATICA
1	**1443036**	95	SAECO 189422000	ARMONIA - AROMA - MAGICESPRESSO
1	**5071524**	190	SAECO 12001033	ESPRESSO ITALIANO - INTELIA - MOLTIO - ROYAL NEW
2	**1443011**	100	SAECO WGADM1561	AROMA
1	**5500425**	127	SAECO 189425100	ARMONIA - AROMA - POEMIA - VIAVENETO - VIAVENEZIA
1	**5015665**	135	SAECO 189425900	FAMILY - FAMILY PLUS
3	**1444601**	150	SAECO NE09.021	MAGICCOMFORT - MAGICDELUXE - ROYAL - VIENNA
4	**1443040**	175	SAECO 189428700	INCANTO - ROYALOFFICE - TREVI - VIENNA
1	**1443083**	175	SAECO 12001034	EXPRELIA - SYNTIA - TALEA - XELSIS - XSMALL
5	**5067822**	175	SAECO 189428300	INCANTO - INCANTO CLASSIC - INCANTO DELUXE - VSPRESSO

TERMOSTATI A CONTATTO SPAZIALE
CONTACT THERMOSTATS SPAZIALE
ANLEGETHERMOSTATE SPAZIALE
TERMOSTATOS DE CONTACTO SPAZIALE

1

Photo	LF Code	Temperature °C	Suitable for	For machine model
1	**1443012**	180	SPAZIALE 06687	PROFESSIONALE - S1

TERMOSTATI A CONTATTO SPINEL
CONTACT THERMOSTATS SPINEL
ANLEGETHERMOSTATE SPINEL
TERMOSTATOS DE CONTACTO SPINEL

1

2

3

4

5

Photo	LF Code	Temperature °C	Suitable for	For machine model
1	**1444506**	90	SPINEL SR.000.095.016	LOLA - RONDOLUX
1	**1443010**	93	SPINEL SR.000.095.017	---
1	**1444003**	95	SPINEL SR.000.095.000	LOLA - LOLITA - MINIMINI
1	**1443005**	98	SPINEL SR.000.095.001	DUETTO - ESSE - LOLA - PINOCCHIO - RONDO - RONDOLUX - TOUR
1	**1443072**	104	SPINEL SR.000.095.010	DUELUX - MINIMINI - MINIMINILUX - PINOCCHIO - TOUR - TRELUX
1	**1443400**	107	SPINEL SR.000.095.012	---
1	**1443071**	110	SPINEL SR.000.095.009	DUELUX - DUETTOLUX - ESSE - MINIMINI - MINIMINILUX - TRELUX
3	**1443070**	135	SPINEL SR.000.095.002	DUELUX - DUETTOLUX - ESSELUX - MINIMINILUX - RONDOLUX - TRELUX
2	**1444206**	145	SPINEL SR.000.095.003	DUELUX - DUETTO - DUETTOLUX - ESSE - ESSELUX - FLAVIA - LOLA
4	**1443073**	155	SPINEL SR.000.095.008	DUETTO - ESSE - LOLA - LOLITA - MINIMINI - PINOCCHIO - RONDO - TOUR
5	**1443074**	250	SPINEL SR.000.095.011	DUETTO - ESSE - LOLA - LOLITA - MINIMINI - PINOCCHIO - RONDO - TOUR

TERMOSTATI A CONTATTO VIBIEMME
CONTACT THERMOSTATS VIBIEMME
ANLEGETHERMOSTATE VIBIEMME
TERMOSTATOS DE CONTACTO VIBIEMME

1

2

3

Photo	LF Code	Temperature °C	Suitable for	For machine model
1	**1443078**	130	VIBIEMME ELETSALVRES	CHIMAERA - CUBO - EVOLUTION - MERCURY - MINIMAX - REPLICA
2	**1443077**	130	VIBIEMME ELETGLDOM128	CHIMAERA - DOMOBARSUPER - REPLICA
2	**1443076**	150	VIBIEMME ELETGLDOM	DOMOBAR - DOMOBARJUNIOR
3	**1443002**	165	VIBIEMME ELETGLDOMM165	DOMOBARJUNIOR - DOMOBARSUPER

TERMOSTATI A CONTATTO VICTORIA ARDUINO
CONTACT THERMOSTATS VICTORIA ARDUINO
ANLEGETHERMOSTATE VICTORIA ARDUINO
TERMOSTATOS DE CONTACTO VICTORIA ARDUINO

1

2

3

Photo	LF Code	Temperature °C	Suitable for	For machine model
1	**1443006**	55	VICTORIA ARDUINO 09500006	ADONIS
2	**1444535**	135	VICTORIA ARDUINO 09500004	ADONIS - ATHENAS - VENUSCENTURY
3	**5035435**	140	VICTORIA ARDUINO 40900007	VENUS FAMILY

TERMOSTATI A CONTATTO WEGA
CONTACT THERMOSTATS WEGA
ANLEGETHERMOSTATE WEGA
TERMOSTATOS DE CONTACTO WEGA

1

Photo	LF Code	Temperature °C	Suitable for	For machine model
1	**1444206**	145	WEGA WY20304	CONCEPT

TERMOSTATI A CONTATTO UNIVERSALI
UNIVERSAL CONTACT THERMOSTATS
ANLEGETHERMOSTATEN UNIVERSAL
TERMOSTATOS DE CONTACTO UNIVERSALES

1

2

3

4

5

6

Photo	LF Code	Temperature °C
1	**1443017**	85
1	**1444506**	90
1	**1443010**	93
1	**1444003**	95
1	**1443005**	98
1	**1443011**	100
1	**1443072**	104
1	**1443400**	107
1	**1443071**	110
1	**3443081**	125
1	**1443401**	135
1	**1443004**	145
2	**1443070**	135
2	**1444206**	145
2	**1443002**	165
3	**1443079**	95
3	**3443026**	110
3	**5027936**	125
3	**1443066**	130
3	**1444521**	155
4	**5027937**	170
4	**1443012**	180
4	**1443034**	250
5	**1443055**	125
5	**5035435**	140
5	**1443063**	143
6	**1443030**	---

TUBI CARICO INOX RACCORDI CONICI
STAINLESS STEEL INLET PIPES WITH CONICAL FITTINGS
ZULAUFSCHLÄUCHE EDELSTAHL KEGELANSCHLÜSSE
TUBOS CARGA INOX RACORES CÓNICOS

1

2

3

4

5

6

Photo	LF Code	Connections	Length (mm)	internal ø (mm)	Max temperature (°C)	Max pressure (bar)
1	**1449706**	1/8"F - 1/8"F	370	6	90	10
1	**1449707**	1/8"F - 1/8"F	1500	6	90	10
1	**1449249**	1/4"F - 1/4"F (ACS)	190	8	90	10
1	**1449269**	1/4"F - 1/4"F (NSF)	280	6	90	10
1	**5019507**	1/4"F - 1/4"F	300	8	90	10
1	**1449238**	1/4"F - 1/4"F (NSF)	320	6	90	10
1	**1449239**	1/4"F - 1/4"F	325	6	90	10
1	**5014643**	1/4"F - 1/4"F	450	6	90	10
1	**5025958**	1/4"F - 1/4"F	500	6	90	10
1	**1449240**	1/4"F - 1/4"F (ACS)	1600	6	90	10
2	**5024776**	3/8"F - 1/4"F (NSF)	250	8	90	10
2	**1449275**	3/8"F - 3/8"F (NSF)	330	8	90	10
2	**1449241**	3/8"F - 3/8"F (ACS)	450	8	90	10
2	**1449276**	3/8"F - 3/8"F (NSF)	450	8	90	10
2	**1449293**	3/8"F - 3/8"F (NSF)	450	8	90	10
2	**1449722**	3/8"F - 3/8"F	500	8	90	10
2	**1449277**	3/8"F - 3/8"F (NSF)	530	8	90	10
2	**1449278**	3/8"F - 3/8"F (NSF)	630	8	90	10
2	**1449242**	3/8"F - 3/8"F (ACS)	700	8	90	10
2	**1449237**	3/8"F - 3/8"F (NSF)	710	8	90	10
2	**1449705**	3/8"F - 3/8"F	750	8	90	10
2	**1449226**	3/8"F - 3/8"F (NSF)	800	8	90	10
2	**1449723**	3/8"F - 3/8"F	1000	8	90	10
2	**1449229**	3/8"F - 3/8"F (NSF)	1000	8	90	10
2	**1449230**	3/8"F - 3/8"F (NSF)	1200	8	90	10
2	**1449725**	3/8"F - 3/8"F	1500	8	90	10
2	**1449243**	3/8"F - 3/8"F (ACS)	1500	8	90	10
2	**1449292**	3/8"F - 3/8"F (NSF)	1500	8	90	10
2	**1449218**	3/8"F - 3/8"F	2000	8	90	10
2	**1449260**	3/8"F - 3/8"F (NSF)	2300	8	90	10
2	**1449261**	3/8"F - 3/8"F (NSF)	2800	8	90	10
3	**1449244**	3/8"F - 3/8"F (ACS)	250	8	90	10
3	**1449245**	3/8"F - 3/8"F (ACS)	310	8	90	10
3	**1449233**	3/8"F - 3/8"F (NSF)	385	8	90	10
3	**1449266**	3/8"F - 3/8"F	385	8	90	10
3	**1449732**	3/8"F - 3/8"F	500	8	90	10
3	**1449234**	3/8"F - 3/8"F (NSF)	500	8	90	10
3	**1449235**	3/8"F - 3/8"F (NSF)	880	8	90	10
3	**1449734**	3/8"F - 3/8"F	1000	8	90	10
3	**1449736**	3/8"F - 3/8"F	1500	8	90	10
3	**3449300**	1/2" Fp x CFp	1500	8	90	10
3	**1449232**	3/8"F - 3/8"F (NSF)	1600	8	90	10
3	**1449246**	3/8"F - 3/8"F (ACS)	1600	8	90	10
3	**1449737**	3/8"F - 3/8"F	2000	8	90	10
3	**5500682**	3/8"F - 3/8"F	2200	8	90	10
4	**1449702**	3/8"M - 3/8"M	500	8	90	10
5	**1449258**	3/8"M - 3/8"F (NSF)	350	8	90	10
5	**7102087**	3/8"M - 3/8"F	380	8	90	10
5	**1449259**	3/8"M - 3/8"F (NSF)	1200	8	90	10
6	**1449247**	3/8"F - 3/8"F (ACS)	250	8	90	10
6	**1449248**	3/8"F - 3/8"F (ACS)	480	8	90	10

TUBI CARICO INOX RACCORDI PIANI
STAINLESS STEEL INLET PIPES WITH FLAT FITTINGS
ZULAUFSCHLÄUCHE EDELSTAHL FLACHANSCHLÜSSE
TUBOS CARGA INOX RACORES LLANOS

1 2 3 4 5 6

Photo	LF Code	Connections	Length (mm)	internal ø (mm)	Max temperature (°C)	Max pressure (bar)
1	**1449708**	1/8"F - 1/8"F	300	6	90	10
1	**1449267**	1/8"F - 1/8"F (NSF)	370	6	90	10
1	**1449709**	1/8"F - 1/8"F	600	6	90	10
1	**5054951**	1/8"F - 1/8"F	1000	6	90	10
1	**1449268**	1/8"F - 1/8"F (NSF)	1000	6	90	10
6	**5501365**	1/8"F - 1/8"M	170	6	90	10
6	**1449227**	1/8"F - 1/8"M (FDA)	205	6	90	10
6	**1449228**	1/8"F - 1/8"M (FDA)	490	6	90	10
3	**1449724**	3/8"F - 3/8"F	1000	8	90	10
3	**1449726**	3/8"F - 3/8"F	1500	8	90	10
3	**1449257**	3/8"F - 3/8"F (NSF)	1500	8	90	10
3	**1449262**	3/8"F - 3/8"F (NSF)	1500	8	90	10
3	**1449089**	3/8"F - 3/8"F	2000	8	90	10
2	**1449718**	3/8"F - 3/8"F	370	8	90	10
2	**1449263**	3/8"F - 3/8"F (NSF)	1500	8	90	10
2	**1449703**	3/8"F - 3/8"F	2000	8	90	10
5	**3449212**	3/8"F - 1/2"F	300	8	90	10
4	**3449213**	3/8"F - 1/2"F	685	10	90	10
4	**5033977**	3/8"F - 3/4"F	2000	10	90	10
6	**3450163**	3/8"F - 1/2" M	280	8	90	10
2	**3449294**	1/2"F - 1/2"F	2000	8	90	10
3	**7105430**	1/2"F - 1/2"F	300	8	90	10
3	**7105317**	1/2"F - 1/2"F	500	8	90	10
3	**3449030**	1/2"F - 1/2"F	1500	12,5	90	10
3	**3449337**	1/2"F - 1/2"F	2000	12,5	90	10
4	**3449317**	1/2"F - 3/8"F	685	8	90	10
4	**3449209**	1/2"F - 1/2"F	1000	8	90	10
4	**3449210**	1/2"F - 1/2"F (WRAS)	1500	12,5	90	10
4	**3449211**	1/2"F - 1/2"F (WRAS)	2000	12,5	90	10
5	**3449031**	3/4"F - 1/2"F (SVGW - VDE)	1500	12,5	90	10
3	**3449208**	3/4"F - 3/4"F	500	12,5	90	10
1	**3449036**	3/4"F - 3/4"F (WRAS)	1000	12,5	90	10
1	**3449032**	3/4"F - 3/4"F (WRAS)	1500	12,5	90	10
1	**3449033**	3/4"F - 3/4"F (WRAS)	2000	12,5	90	10
2	**3449324**	3/4"F - 3/4"F	500	12,5	90	10
2	**3449037**	3/4"F - 3/4"F (WRAS)	1000	12,5	90	10
2	**3449034**	3/4"F - 3/4"F (WRAS)	1500	12,5	90	10
2	**1449264**	3/4"F - 3/4"F (NSF)	1500	8	90	10
2	**3449035**	3/4"F - 3/4"F (WRAS)	2000	12,5	90	10
2	**3449038**	3/4"F - 3/4"F (WRAS)	2500	12,5	90	10

TUBI CARICO INOX RACCORDI PIANI/CONICI
STAINLESS STEEL INLET PIPES WITH FLAT/CONICAL FITTINGS
ZULAUFSCHLÄUCHE EDELSTAHL KEGEL-/FLACHANSCHLÜSSE
TUBOS CARGA INOX RACORES LLANOS/CÓNICOS

1

Photo	LF Code	Connections	Length (mm)	internal ø (mm)	Max temperature (°C)	Max pressure (bar)
1	**1449710**	3/8"F - 3/8"F	300	8	90	10
1	**1449711**	3/8"F - 3/8"F	500	8	90	10
1	**1449712**	3/8"F - 3/8"F	800	8	90	10
1	**1449713**	3/8"F - 3/8"F	1000	8	90	10
1	**1449714**	3/8"F - 3/8"F	1200	8	90	10
1	**1449715**	3/8"F - 3/8"F	1500	8	90	10

ACCESSORI TUBI CARICO
ACCESSORIES INLET PIPES
ZUBEHÖR ZULAUFSCHLÄUCHE
ACCESORIOS TUBOS DE CARGA

1

2

3

4

5

6

Photo	LF Code	Dimensions	Material	Suitable for
1	**1186042**	ø 9x5x1 mm	asbestos free	pipes ø 1/8"
1	**1186041**	ø 14.5x10x2 mm	asbestos free	pipes ø 3/8"
2	**3449039**	ø 18x11x2 mm	EPDM	pipes ø 1/2"
2	**3449026**	ø 24x12x2 mm	EPDM	pipes ø 3/4"
3	**3449025**	---	EPDM/stainless steel	pipes ø 3/4"
4	**3160141**	3/4"F - 3/4"M	PVC	---
5	**1160042**	1/4"F - 1/4"F	brass	---
5	**3160462**	1/2"F - 1/2"F	brass	---
5	**3160007**	3/4"F - 3/4"F	brass	---
6	**3525024**	3/4"F - 3/4"M	PVC	---

VALVOLE ACQUA
WATER VALVES
WASSERVENTILE
VÁLVULAS AGUA

1

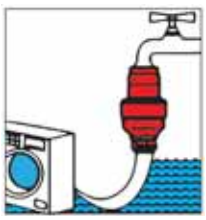

WRAS
Water Regulations Advisory Scheme

Photo	LF Code	Notes	Suitable for	For machine model
1	**3525024**	ø 3/4"F-3/4"M	---	FOR INLET HOSES - PER TUBI CARICO

TUBI SCARICO ELISPIR
DRAIN PIPES ELISPIR
AUSLAUFROHRE ELISPIR
TUBOS DESAGÜE ELISPIR

1

2

3

4

Photo	LF Code	ø (mm)	Length (mm)	Sold per meter
1	**1449270**	12x18	30	---
1	**1449670**	12x18	5	---
1	**1449271**	14x20	30	---
1	**1449671**	14x20	5	---
1	**1449272**	16x23	30	---
1	**1449672**	16x23	5	---
1	**1449273**	18x25	30	---
1	**1449673**	18x25	5	---
1	**1449274**	20x27	30	---
1	**1449674**	20x27	5	---
1	**1449255**	25x33	---	Yes
1	**1449256**	30x38	---	Yes
1	**5020932**	35x44	---	Yes
1	**5051771**	45x55	---	Yes
2	**1449104**	3/4"M	---	---
3	**1449876**	3/4"M	1.5	---
4	**1450010**	14x20	30	---
4	**1450011**	16x22	30	---

The new & powerful player
in the **home appliances** spare parts market

GOMMINI PROTEZIONE
PROTECTIVE RUBBERPIECES
SCHUTZGUMMI
GOMAS PROTECCIÓN

1

2

3

4

5

Photo	LF Code	For pipe ø (mm)	Suitable for
1	**1186398**	8	ALL BRANDS - TUTTE LE MARCHE
1	**5030025**	10	ALL BRANDS - TUTTE LE MARCHE
2	**1187501**	8	ALL BRANDS - TUTTE LE MARCHE
2	**1186924**	10	ALL BRANDS - TUTTE LE MARCHE
3	**1186180**	10	ALL BRANDS - TUTTE LE MARCHE
4	**1549009**	8	ASTORIA/CMA - MCE - WEGA
5	**1549011**	10	CASADIO - CIMBALI - FAEMA

GOMMINI PROTEZIONE
PROTECTIVE RUBBERPIECES
SCHUTZGUMMI
GOMAS PROTECCIÓN

1

2

3

4

5

6

Photo	LF Code	For pipe ø (mm)	Suitable for
1	**1186339**	8	ALL BRANDS - TUTTE LE MARCHE
2	**1186080**	10	ALL BRANDS - TUTTE LE MARCHE
3	**1549020**	10	GAGGIA
4	**1187001**	10	SPAZIALE
5	**1449172**	8	ASTORIA/CMA - ELEKTRA - MARZOCCO - WEGA
6	**1649002**	8	CARIMALI

GOMMINI PROTEZIONE
PROTECTIVE RUBBERPIECES
SCHUTZGUMMI
GOMAS PROTECCIÓN

1

2

3

Photo	LF Code	For pipe ø (mm)	Suitable for
1	**1549032**	---	DELONGHI
2	**5500789**	---	SAECO
3	**1189002**	---	GAGGIA - SAECO

TUBI VAPORE-ACQUA ASTORIA/CMA
STEAM/WATER PIPES ASTORIA/CMA
DAMPF/WASSERROHRE ASTORIA/CMA
TUBOS VAPOR/AGUA ASTORIA/CMA

1

2

3

4

5

6

Photo	LF Code	Notes	Suitable for	For machine model
1	**1449205**	---	ASTORIA/CMA 90313R	ADRIA - ARGENTA - DENISE - DORA - LISA - PRATIC - VANIA
2	**1449203**	---	ASTORIA/CMA 90310R	ADRIA - ARGENTA - DENISE - DORA - LISA - PRATIC - VANIA
3	**1449204**	S.STEEL ø 8 mm - 330 mm	ASTORIA/CMA 25763116	ADRIA - ARGENTA - DENISE - DORA - LISA - PLUS4YOU
4	**1449820**	---	ASTORIA/CMA 90312R	ADRIA - ARGENTA - DENISE - DORA - LISA - PRATIC - VANIA
4	**1449821**	---	ASTORIA/CMA 90321	ADRIA - ARGENTA - DENISE - DORA - LISA - PRATIC - VANIA
5	**1449103**	S.STEEL ø 10 mm - 255 mm	ASTORIA/CMA 25763009	DIVINA - GLORIA - GLORIA R12
6	**1449294**	S.STEEL ø 8 mm - 295 mm	ASTORIA/CMA 25763116	GLORIA P4Y - PLUS4YOU

TUBI VAPORE-ACQUA ASTORIA/CMA
STEAM/WATER PIPES ASTORIA/CMA
DAMPF/WASSERROHRE ASTORIA/CMA
TUBOS VAPOR/AGUA ASTORIA/CMA

1

2

3

4

5

6

Photo	LF Code	Notes	Suitable for	For machine model
1	**1449098**	CHROME ø 8 mm - 280 mm	ASTORIA/CMA 56119107	ADRIA - ARGENTA - DENISE - DORA - PERLA - PRATIC
2	**1449106**	CHROME ø 8 mm - 320 mm	ASTORIA/CMA 56119108	ADRIA - ARGENTA - DENISE - DORA - PERLA - PRATIC
3	**1449105**	S.STEEL ø 8 mm - 270 mm	ASTORIA/CMA 25763304	ADRIA - ARGENTA - DENISE - DORA - PERLA - PRATIC
4	**1449101**	S.STEEL ø 8 mm - 280 mm	ASTORIA/CMA 25763310	ADRIA - ARGENTA - DENISE - DORA - PERLA - PRATIC
5	**1449265**	S.STEEL ø 8 mm - 290 mm	ASTORIA/CMA 25763097	CALYPSO R15
6	**1449102**	S.STEEL ø 8 mm - 320 mm	ASTORIA/CMA 25763308	ADRIA - ARGENTA - DENISE - DORA - PERLA - PRATIC

TUBI VAPORE-ACQUA ASTORIA/CMA
STEAM/WATER PIPES ASTORIA/CMA
DAMPF/WASSERROHRE ASTORIA/CMA
TUBOS VAPOR/AGUA ASTORIA/CMA

1

2

Photo	LF Code	Notes	Suitable for	For machine model
1	**1449206**	---	ASTORIA/CMA 56119024	CK - CKE - CKX - CKXE
2	**1449095**	CHROME ø 8 mm - 255 mm	ASTORIA/CMA 56119006	ADRIA - ARGENTA - DENISE - DORA - LISA - PRATIC

TUBI VAPORE-ACQUA ASTORIA/CMA
STEAM/WATER PIPES ASTORIA/CMA
DAMPF/WASSERROHRE ASTORIA/CMA
TUBOS VAPOR/AGUA ASTORIA/CMA

1

2

3

4

5

6

Photo	LF Code	Notes	Suitable for	For machine model
1	**1449097**	S.STEEL M10	ASTORIA/CMA 25763002	CALYPSO - DIVINA - GLORIA - GLORIA R12 - PERLA 4D
2	**1449099**	M10	ASTORIA/CMA 25761	ARGENTA - CK - CKE - CKX - CKXE - DENISE - DORA - LISA
3	**1449116**	M9 - H 18 mm	ASTORIA/CMA 30250	ARGENTA - CK - CKE - CKX - CKXE - DENISE - DORA - LISA
4	**1449093**	M10	ASTORIA/CMA 25762	ARGENTA - CK - CKE - CKX - CKXE - DENISE - DORA - PERLA
5	**1449096**	M8	ASTORIA/CMA 25762A	ARGENTA - DENISE - DORA - GLORIA - PERLA 4D - PLUS4YOU
6	**1549008**	M8	ASTORIA/CMA 25763080	CALYPSO - LISA - PLUS4YOU - VANIA

TUBI VAPORE-ACQUA BEZZERA
WATER-STEAM PIPES BEZZERA
DAMPF-/WASSERROHRE BEZZERA
TUBOS VAPOR-AGUA BEZZERA

1

2

3

4

5

Photo	LF Code	Notes	Suitable for	For machine model
1	**1449370**	---	BEZZERA 5966502	B2000 - B2000 AL - B2006 - B2006 AL - B2009 COMPACT
2	**1449369**	---	BEZZERA 5966503	BZ35 - BZ40 - BZ99 - PROEX
3	**1449826**	---	BEZZERA 5966514	B2000 SPECIAL - B3000 SPECIAL
4	**1449373**	---	BEZZERA 5966506.01	B2000 - B2000 AL - B2006 - B2006 AL - B3000 - B4000
5	**1449056**	---	BEZZERA 5226602	BZ02 - BZ35 - BZ40 - BZ99 - B2000 - B3000 - B4000

TUBI VAPORE-ACQUA BFC
STEAM-WATER PIPES BFC
DAMPF-/WASSERROHRE BFC
TUBOS VAPOR-AGUA BFC

1

2

3

4

5

Photo	LF Code	Notes	Suitable for	For machine model
1	**1548035**	S.STEEL ø 10 mm - 285 mm	BFC 2520512	CLASSICA - GRANDOGE - LA VITTORIA - OPERA
2	**5051944**	S.STEEL ø 10 mm - 300 mm	BFC 2520518	DELUX - IMOLA - LIRA - MARANELLO - MONZA
3	**1549049**	S.STEEL ø 10 mm - 285 mm	BFC 2520540	GALILEO
4	**1449167**	H 105 mm	BFC 2520015	CLASSICA - LA VITTORIA - LIRA - OPERA
5	**1449332**	---	BFC	CLASSICA - LA VITTORIA - LIRA - OPERA

Tubi vapore-acqua macchine caffè
Steam-water pipes coffee machines
Wasser/Dampfrohre f. Kaffeemaschinen
Tubos vapor-agua máquinas de café

TUBI VAPORE-ACQUA BIANCHI
STEAM-WATER PIPES BIANCHI
DAMPF-/WASSERROHRE BIANCHI
TUBOS VAPOR-AGUA BIANCHI

1

2

3

4

5

Photo	LF Code	Notes	Suitable for	For machine model
1	**1549007**	S.STEEL ø 10 mm - 230 mm	BIANCHI 04060116	SARA - SOFIA
2	**1549024**	S.STEEL ø 10 mm - 240 mm	BIANCHI 43140516	LUCIA
3	**1549025**	ø 8 mm	BIANCHI 04055816	LUCIA
4	**1549026**	ø 8 mm	BIANCHI 04054916	SOFIA
5	**1449332**	---	BIANCHI 43052616	LUCIA - SOFIA

TUBI VAPORE-ACQUA BRASILIA
STEAM-WATER PIPES BRASILIA
DAMPF-/WASSERROHRE BRASILIA
TUBOS VAPOR-AGUA BRASILIA

1

2

3

4

5

Photo	LF Code	Notes	Suitable for	For machine model
1	**1449335**	---	BRASILIA 12058.4.00.09	BARAMERICA - CENTURY - FIRENZE - GRADISCA - PORTOFINO
2	**1449344**	---	BRASILIA 12060.4.00.09	GRADISCA
3	**1449331**	---	BRASILIA 12055.4.00.09	BARAMERICA - CENTURY - FIRENZE - GRADISCA - PORTOFINO
4	**1449343**	---	BRASILIA 12057.4.00.09	BARAMERICA - CENTURY - FIRENZE - GRADISCA - PORTOFINO
5	**1449012**	---	BRASILIA 13519.4.00.09	CENTURY - GRADISCA - PORTOFINO

TUBI VAPORE-ACQUA BRASILIA
STEAM-WATER PIPES BRASILIA
DAMPF-/WASSERROHRE BRASILIA
TUBOS VAPOR-AGUA BRASILIA

1

2

3

4

Photo	LF Code	Notes	Suitable for	For machine model
1	**1449332**	---	BRASILIA 04661.0.10.04	BARAMERICA - CENTURY - FIRENZE - GRADISCA - PORTOFINO
2	**1449018**	---	BRASILIA 05004.4.00.09	BARAMERICA - CENTURY - FIRENZE - GRADISCA - PORTOFINO
3	**1449020**	---	BRASILIA 00039.0.10.04	BARAMERICA - CENTURY - FIRENZE - GRADISCA - PORTOFINO
4	**1449016**	---	BRASILIA 11097.2.10.04	BARAMERICA - CENTURY - FIRENZE - GRADISCA - PORTOFINO

TUBI VAPORE-ACQUA BRUGNETTI/AURORA
STEAM-WATER PIPES BRUGNETTI/AURORA
DAMPF-/WASSERROHRE BRUGNETTI/AURORA
TUBOS VAPOR-AGUA BRUGNETTI/AURORA

1

Photo	LF Code	Notes	Suitable for	For machine model
1	**1449326**	S.STEEL ø 10 mm	BRUGNETTI 800203	ALEXIA

TUBI VAPORE-ACQUA CARIMALI
STEAM-WATER PIPES CARIMALI
DAMPF-/WASSERROHRE CARIMALI
TUBOS VAPOR-AGUA CARIMALI

1

2

3

4

Photo	LF Code	Notes	Suitable for	For machine model
1	**1449831**	---	CARIMALI 02.01459.CR	ECO - ETA BETA V2 - E9 ESPRESSO - KIKKO - SYSTEMA - UNO
2	**1449832**	---	CARIMALI 02.00302.CR	ECO - SYSTEMA - TEMA STYLE - UNO
3	**1449018**	---	CARIMALI 95.00746	ETA BETA V2 - E9 ESPRESSO - KIKKO - PRATICA - TEMA STYLE
4	**5051782**	---	CARIMALI 16.00144	PRATICA

TUBI VAPORE-ACQUA CASADIO
STEAM-WATER PIPES CASADIO
DAMPF-/WASSERROHRE CASADIO
TUBOS VAPOR-AGUA CASADIO

1 - ORIGINAL

2 - ORIGINAL

3 - SUITABLE

4 - SUITABLE

5 - ORIGINAL

Photo	LF Code	Notes	Suitable for	For machine model
1	**1549005**	S.STEEL ø 10 mm - 335 mm	CASADIO 958816010	DIECIA - DIECIS - VENTI
2	**1449143**	S.STEEL ø 10 mm - 255 mm	CASADIO 985724000	DODICIA - DODICIS
3	**1449543**	S.STEEL ø 10 mm - 255 mm	CASADIO 985724000	DODICIA - DODICIS
4	**1449837**	---	CASADIO	DODICIA - DODICIS
5	**1549065**	S.STEEL ø 10 mm - 290 mm	CASADIO 978732000F	UNDICI

TUBI VAPORE-ACQUA CASADIO
STEAM-WATER PIPES CASADIO
DAMPF-/WASSERROHRE CASADIO
TUBOS VAPOR-AGUA CASADIO

1

2

3

4

5

Photo	LF Code	Notes	Suitable for	For machine model
1	**1449042**	---	CASADIO 936960010	DODICIA - DODICIS
2	**1449209**	---	CASADIO 958739020	DIECIA - DIECIS - VENTI
3	**1549012**	ø 1/8"F	CASADIO 913438000	DIECI - DODICI
4	**1449196**	---	CASADIO 985717010	DODICIA - DODICIS
5	**5029747**	---	CASADIO 532305000	DODICIA - DODICIS

TUBI VAPORE-ACQUA CIMBALI
STEAM-WATER PIPES CIMBALI
DAMPF-/WASSERROHRE CIMBALI
TUBOS VAPOR-AGUA CIMBALI

1 - ORIGINAL

2 - SUITABLE

3 - ORIGINAL

4 - SUITABLE

5

6

Photo	LF Code	Notes	Suitable for	For machine model
1	**5030092**	S.STEEL ø 10 mm - 280 mm	CIMBALI 985-748-000	M39 - M39GT
2	**1449215**	S.STEEL ø 10 mm - 280 mm	CIMBALI	M39 - M39GT
3	**1449143**	S.STEEL ø 10 mm - 255 mm	CIMBALI 952-723-000	M20 - M21 - M22 - M24 - M24SELECT - M27 - M28 - M29 - M30
4	**1449543**	S.STEEL ø 10 mm - 255 mm	CIMBALI 952-723-000	M20 - M21 - M22 - M24 - M24SELECT - M27 - M28 - M29 - M30
5	**1449837**	---	CIMBALI	M20 - M21 - M22 - M24 - M24SELECT - M27 - M28 - M29 - M30
5	**1449836**	---	CIMBALI	M15
6	**1449838**	---	CIMBALI	M25

TUBI VAPORE-ACQUA CIMBALI
STEAM-WATER PIPES CIMBALI
DAMPF-/WASSERROHRE CIMBALI
TUBOS VAPOR-AGUA CIMBALI

1

2

3

4

5

Photo	LF Code	Notes	Suitable for	For machine model
1	**1449042**	---	CIMBALI 936-960-010	M21 - M24 - M27 - M28 - M29 - M30 - M31 - M39
2	**1549010**	---	CIMBALI 920-739-030	M39GT
3	**1449148**	---	CIMBALI	---
4	**1449029**	---	CIMBALI	M15 - M20
5	**1549013**	---	CIMBALI 407-014-008	M29 - M32 - M39 - M39GT

TUBI VAPORE-ACQUA CIMBALI
STEAM-WATER PIPES CIMBALI
DAMPF-/WASSERROHRE CIMBALI
TUBOS VAPOR-AGUA CIMBALI

1

2

3

4

5

6

Photo	LF Code	Notes	Suitable for	For machine model
1	**1449166**	ø 1/8"F	CIMBALI 537-023-100	M20 - M27 - M30 - M31 - M39 - M39GT
1	**1549012**	ø 1/8"F	CIMBALI 913-438-000	M21 - M24 - M39GT
2	**1449043**	---	CIMBALI 4151-134-031	M27 2008
3	**1449142**	---	CIMBALI 406-027-007	JUNIOR - M25 - M27 - M30
4	**1449196**	---	CIMBALI 985-717-010	M24
5	**5029747**	---	CIMBALI 532-305-000	M27 - M28 - M29 - M30 - M31 - M39 - M39GT
6	**1449317**	---	CIMBALI 533-590-410	M21 - M28 - M30

TUBI VAPORE-ACQUA CONTI
STEAM-WATER PIPES CONTI
DAMPF-/WASSERROHRE CONTI
TUBOS VAPOR-AGUA CONTI

1

2

3

Photo	LF Code	Notes	Suitable for	For machine model
1	**1449329**	---	CONTI 410310	XEOS
2	**1449328**	---	CONTI 410229	CLUB - TWIN STAR2 - XEOS2
3	**1449330**	---	CONTI 410275	TWIN STAR2 - XEOS2

TUBI VAPORE-ACQUA DELONGHI
STEAM-WATER PIPES DELONGHI
DAMPF-/WASSERROHRE DELONGHI
TUBOS VAPOR-AGUA DELONGHI

1

2

3

4

5

6

Photo	LF Code	Notes	Suitable for	For machine model
1	**1079024**	---	DELONGHI 7313214601	ECAM23.210.W
2	**5076355**	---	DELONGHI 5513270219	ESAM04.110.B - ECAM21.117.B - ESAM5400.L - ECAM26455M
3	**1549033**	---	DELONGHI 5332113800	ECOV310AZ - EC300M - ESAM2800.SB EX:1 - ESAM3200.S - ESAM4400
4	**D549003**	---	DELONGHI 5332169300	BCO410 - ECAM21.110.B - ECAM22.110.B - ECZ351.BK - EC270
5	**1549066**	---	DELONGHI 5313231221	EC680.BK - ETAM29.510.B - ECAM45760B - ESAM6900.M - ECAM28.467.B
6	**D548006**	---	DELONGHI 5532150200	LATTISSIMA OLD

Tubi vapore-acqua macchine caffè
Steam-water pipes coffee machines
Wasser/Dampfrohre f. Kaffeemaschinen
Tubos vapor-agua máquinas de café

TUBI VAPORE-ACQUA DELONGHI
STEAM-WATER PIPES DELONGHI
DAMPF-/WASSERROHRE DELONGHI
TUBOS VAPOR-AGUA DELONGHI

1

2

3

4

5

6

Photo	LF Code	Notes	Suitable for	For machine model
1	**5054443**	---	DELONGHI 5532124900	ESAM3500.S - ESAM3550.B - ESAM3600 - ESAM3600.S - ESAM3650 - ESAM4500
2	**5062794**	---	DELONGHI 5513212801	ESAM04.350 - ESAM5500 - ESAM5600 - ESAM5700 - ESAM6600
3	**D548001**	---	DELONGHI 5513213511	ECAM23.450 - ECAM25.452
4	**D548002**	---	DELONGHI 5513213581	LATTISSIMA PREMIUM
5	**D548010**	---	DELONGHI 7313228991	ECAM26.455
6	**D549001**	---	DELONGHI 5513210251	ESAM5500 - ESAM6600 - ESAM6620 - ESAM6650 - ESAM6700

TUBI VAPORE-ACQUA ECM
STEAM-WATER PIPES ECM
DAMPF-/WASSERROHRE ECM
TUBOS VAPOR-AGUA ECM

1

2

3

4

Photo	LF Code	Notes	Suitable for	For machine model
1	**1449064**	ø 8 mm - 240 mm	ECM C277700907	MICHELANGELO - RAFFAELLO
2	**1449062**	---	ECM C277700401	GIOTTO
3	**1449063**	---	ECM C277700402	GIOTTO
4	**1449020**	---	ECM C229900538	MICHELANGELO - RAFFAELLO - VENEZIANO

TUBI VAPORE-ACQUA ECM MANUFACTURE
STEAM/WATER PIPES ECM MANUFACTURE
DAMPF/WASSER ROHRE ECM MANUFACTURE
VAPOR/AGUA TUBOS ECM MANUFACTURE

1

2

Photo	LF Code	Notes	Suitable for	For machine model
1	**1549052**	ø 10 mm - 250 mm	ECM MANUFACTURE P6002	CLASSIKA II - ELEKTRONIKA II PROFI - MECHANIKA
2	**1549053**	ø 10 mm - 230 mm	ECM MANUFACTURE P6001	ELEKTRONIKA II PROFI - MECHANIKA

TUBI VAPORE-ACQUA ELEKTRA
STEAM-WATER PIPES ELEKTRA
DAMPF-/WASSERROHRE ELEKTRA
TUBOS VAPOR-AGUA ELEKTRA

1

2

3

4

5

Photo	LF Code	Notes	Suitable for	For machine model
1	**1449220**	---	ELEKTRA 02202039	CLASSIC - SIXTIES
2	**1449030**	---	ELEKTRA 00151039	MICROCASA
3	**1449221**	---	ELEKTRA 02206039	CLASSIC - SIXTIES
4	**1449317**	---	ELEKTRA 00424014	CLASSIC - SIXTIES
5	**5023967**	---	ELEKTRA 01400021	MICROCASA

TUBI VAPORE-ACQUA EXPOBAR
STEAM-WATER PIPES EXPOBAR
DAMPF-/WASSERROHRE EXPOBAR
TUBOS VAPOR-AGUA EXPOBAR

1

2

3

4

Photo	LF Code	Notes	Suitable for	For machine model
1	**1449001**	S.STEEL ø 10 mm	EXPOBAR 35010050	ELEN - MARKUS
2	**1449002**	H 100 mm	EXPOBAR 30370080	DIAMANT - ELEN - G10 - MARKUS - MARKUS SILVER - MEGACREM
3	**1449394**	---	EXPOBAR 30000010	ELEN - MONROC
4	**1449332**	---	EXPOBAR 30000050	DIAMANT - G10 - MARKUS - MARKUS SILVER - MONROC

TUBI VAPORE-ACQUA FAEMA
STEAM-WATER PIPES FAEMA
DAMPF-/WASSERROHRE FAEMA
TUBOS VAPOR-AGUA FAEMA

1 - ORIGINAL

2 - SUITABLE

3 - ORIGINAL

4 - SUITABLE

5

6

Photo	LF Code	Notes	Suitable for	For machine model
1	**1449041**	S.STEEL ø 10 mm	FAEMA 537033010	E92 - STYLEMA
2	**1449347**	S.STEEL ø 10 mm	FAEMA	E92 - STYLEMA
3	**1449143**	S.STEEL ø 10 mm - 255 mm	FAEMA 485949050	E98 COMPACT - E98 PRESIDENT
4	**1449543**	S.STEEL ø 10 mm - 255 mm	FAEMA 485949050	E98 COMPACT - E98 PRESIDENT
5	**1449346**	S.STEEL ø 10 mm	FAEMA 2221133434	DUE - E91 - SMART
6	**5060070**	S.STEEL ø 10 mm	FAEMA 927720040	EMBLEMA - TEOREMA

TUBI VAPORE-ACQUA FAEMA
STEAM-WATER PIPES FAEMA
DAMPF-/WASSERROHRE FAEMA
TUBOS VAPOR-AGUA FAEMA

1

2

3

4

5

6

Photo	LF Code	Notes	Suitable for	For machine model
1	**1449849**	---	FAEMA	COMPACT - EXPRESS - SPECIAL
2	**1449843**	---	FAEMA 3952119417	STAR
3	**1449844**	---	FAEMA 3952119420	STAR
4	**1449856**	---	FAEMA	E61
5	**1449040**	S.STEEL ø 10 mm	FAEMA 3951136653	E61 - E61 LEGEND
6	**1449841**	250 mm	FAEMA	E61
6	**1449842**	300 mm	FAEMA	E61

TUBI VAPORE-ACQUA FAEMA
STEAM-WATER PIPES FAEMA
DAMPF-/WASSERROHRE FAEMA
TUBOS VAPOR-AGUA FAEMA

1

2

3

4

5

6

Photo	LF Code	Notes	Suitable for	For machine model
1	**1549013**	---	FAEMA 407014008	ELITE - EMBLEMA - E92 - STYLEMA
2	**1449042**	---	FAEMA 936960010	DUE - E91 - E92 - E97 - E98 - STYLEMA
3	**1449148**	---	FAEMA 985718010	DUE - E91
4	**1549010**	---	FAEMA 920739030	EMBLEMA - EMBLEMA RESTYLING - TEOREMA
5	**1449046**	---	FAEMA 2221134421	E97
6	**1449362**	---	FAEMA 3952119067	COMPACT - EXPRESS - NOSTOP - SPECIAL

TUBI VAPORE-ACQUA FAEMA
STEAM-WATER PIPES FAEMA
DAMPF-/WASSERROHRE FAEMA
TUBOS VAPOR-AGUA FAEMA

1

2

3

4

5

6

Photo	LF Code	Notes	Suitable for	For machine model
1	**1449166**	ø 1/8"F	FAEMA 537023100	E98 COMPACT - E98 PRESIDENT
2	**1449043**	---	FAEMA 4151134031	DUE - ELITE - ENOVA - E91 - E92 - E97 - E98 - SMART - STYLEMA
3	**1449056**	---	FAEMA 4158135926	E61
4	**1449196**	---	FAEMA 985717010	DUE - E91 - E98 PRESIDENT - ELITE - ENOVA - STYLEMA
5	**5029747**	---	FAEMA 532305000	DUE - E91 - E98 PRESIDENT - ELITE - ENOVA - STYLEMA
6	**1449317**	---	FAEMA 533590410	E98 COMPACT - E98 PRESIDENT

TUBI VAPORE-ACQUA FIAMMA RST
STEAM-WATER PIPES FIAMMA RST
DAMPF-/WASSERROHRE FIAMMA RST
TUBOS VAPOR-AGUA FIAMMA RST

1

2

3

4

5

6

Photo	LF Code	Notes	Suitable for	For machine model
1	**1549045**	S.STEEL ø 10 mm - 260 mm	FIAMMA 5.0.016.0320	ATLANTIC - PRESTIGE
2	**1549048**	CHROME ø 8 mm - 245 mm	FIAMMA 5.0.002.0120	MARINA
3	**1449002**	100 mm	FIAMMA 5.0.016.0330	ATLANTIC - PRESTIGE
3	**1549046**	95 mm	FIAMMA 5.0.002.0130	MARINA
4	**1449065**	---	FIAMMA 5.0.016.0325	ATLANTIC - PRESTIGE
5	**1449020**	---	FIAMMA 5.0.002.0124	MARINA
6	**1449332**	---	FIAMMA	ATLANTIC - PRESTIGE - MARINA

TUBI VAPORE-ACQUA FIORENZATO CS
STEAM-WATER PIPES FIORENZATO CS
DAMPF-/WASSERROHRE FIORENZATO CS
TUBOS VAPOR-AGUA FIORENZATO CS

1

2

3

4

5

Photo	LF Code	Notes	Suitable for	For machine model
1	**1449301**	---	FIORENZATO A2200064	DUCALE - FENICE - LIDO - MURANO - PIAZZASANMARCO - RIALTO
2	**1449302**	---	FIORENZATO A2200063	DUCALE - FENICE - LIDO - MURANO - PIAZZASANMARCO - RIALTO
3	**1449393**	---	FIORENZATO A2000090	FENICE - MURANO - RIALTO
4	**1549016**	---	FIORENZATO A2000095	COLOMBINA - BRICOLETTA
5	**1449394**	---	FIORENZATO A2200044	---

TUBI VAPORE-ACQUA FIORENZATO CS
STEAM-WATER PIPES FIORENZATO CS
DAMPF-/WASSERROHRE FIORENZATO CS
TUBOS VAPOR-AGUA FIORENZATO CS

1

2

3

4

5

Photo	LF Code	Notes	Suitable for	For machine model
1	**1449012**	---	FIORENZATO A2200008	FENICE - MURANO - PIAZZASANMARCO - RIALTO
2	**1449304**	---	FIORENZATO A2200022	DUCALE - FENICE
3	**1549014**	---	FIORENZATO A2000096	BRICOLETTA
4	**1549015**	---	FIORENZATO A2000157	DUCALE COMPACT
5	**1449332**	---	FIORENZATO A2200012	---

TUBI VAPORE-ACQUA FRACINO
STEAM/WATER PIPES FRACINO
DAMPF/WASSER ROHRE FRACINO
VAPOR/AGUA TUBOS FRACINO

1

2

Photo	LF Code	Notes	Suitable for	For machine model
1	**1549050**	ø 10 mm - 315 mm	FRACINO FC222X	CONTEMPO - RETRO - ROMANO
2	**1549051**	---	FRACINO FC194/D	CHERUB - HEAVENLY - RETRO

TUBI VAPORE-ACQUA FUTURMAT
STEAM-WATER PIPES FUTURMAT
DAMPF-/WASSERROHRE FUTURMAT
TUBOS VAPOR-AGUA FUTURMAT

1

2

3

4

5

Photo	LF Code	Notes	Suitable for	For machine model
1	**1449853**	---	FUTURMAT 08165722	RIMINI
2	**1449336**	---	FUTURMAT 08207400	RIMINI
3	**1449845**	---	FUTURMAT 07428709	---
4	**1449854**	---	FUTURMAT 08206013	RIMINI
5	**1449855**	ø 18 mm - 47 mm	FUTURMAT 08207506	RIMINI

TUBI VAPORE-ACQUA GAGGIA
STEAM-WATER PIPES GAGGIA
DAMPF-/WASSERROHRE GAGGIA
TUBOS VAPOR-AGUA GAGGIA

1 2 3 4 5 6

Photo	LF Code	Notes	Suitable for	For machine model
1	**1549021**	ø 10 mm - 275 mm	GAGGIA 11011247	GE - GD - GEONE - GDONE
2	**1549019**	ø 10 mm - 275 mm	GAGGIA 11006178	DECO
3	**1449847**	---	GAGGIA	XE - XD
4	**1549018**	ø 6 mm	GAGGIA 7008003000	TS
5	**1449846**	---	GAGGIA 41.90.91.12	TELL
6	**1549017**	ø 8 mm - 360 mm	GAGGIA RB0856/A	D90 - E90

TUBI VAPORE-ACQUA GAGGIA
STEAM-WATER PIPES GAGGIA
DAMPF-/WASSERROHRE GAGGIA
TUBOS VAPOR-AGUA GAGGIA

1 2 3 4 5 6

Photo	LF Code	Notes	Suitable for	For machine model
1	**5047884**	82 mm	GAGGIA 227431321	ACHILLE - TITANIUMSILVER
2	**1449132**	---	GAGGIA 11011504	BRERA - CAREZZA DELUXE - GRAN GAGGIA
3	**1449133**	---	GAGGIA 11001620	BRERA - CAREZZA DELUXE - GRAN GAGGIA - UNICA
4	**1549061**	---	GAGGIA 11001769	GRAN GAGGIA - PLATINUM - UNICA
5	**5047887**	82 mm	GAGGIA 8301006000	CLASSIC - ESPRESSO - ESPRESSODELUXE - NEWBABY
6	**5500801**	---	GAGGIA 147430150	SYNCRONY LOGIC

TUBI VAPORE-ACQUA GAGGIA
STEAM-WATER PIPES GAGGIA
DAMPF-/WASSERROHRE GAGGIA
TUBOS VAPOR-AGUA GAGGIA

1 2 3 4

Photo	LF Code	Notes	Suitable for	For machine model
1	**1449332**	---	GAGGIA 11004974	DECO
2	**1449317**	---	GAGGIA WGA5001005000	DECO
3	**1449174**	---	GAGGIA 4332049000	NEWBABY06 - NEWESPRESSO06
4	**1449129**	---	GAGGIA 11000593	CAPPUCCINO XTWO

TUBI VAPORE-ACQUA GAGGIA SPAGNA
STEAM-WATER PIPES GAGGIA SPAGNA
DAMPF-/WASSERROHRE GAGGIA SPAGNA
TUBOS VAPOR-AGUA GAGGIA SPAGNA

1

2

3

4

Photo	LF Code	Notes	Suitable for	For machine model
1	**1449853**	---	GAGGIA SPAGNA 08165722	NERA
2	**1449336**	---	GAGGIA SPAGNA 08207400	NERA
3	**1449854**	---	GAGGIA SPAGNA 08206013	NERA
4	**1449855**	ø 18 mm - 47 mm	GAGGIA SPAGNA 08207506	NERA

TUBI VAPORE-ACQUA GRIMAC
STEAM-WATER PIPES GRIMAC
DAMPF-/WASSERROHRE GRIMAC
TUBOS VAPOR-AGUA GRIMAC

1

2

3

4

5

Photo	LF Code	Notes	Suitable for	For machine model
1	**1449698**	---	GRIMAC 1260200031-GR211	ECLISSE - G10 - TWENTY - ZOLAI - ZOLAII
2	**1449393**	---	GRIMAC A2000090	G11
3	**1449068**	---	GRIMAC 1260200034-GR348	ZOLAII
4	**1449176**	S.STEEL ø 8 mm - 160 mm	GRIMAC 2260200036-MG569R	NUVOLA
5	**1449394**	---	GRIMAC A2200044	G11

TUBI VAPORE-ACQUA GRIMAC
STEAM-WATER PIPES GRIMAC
DAMPF-/WASSERROHRE GRIMAC
TUBOS VAPOR-AGUA GRIMAC

1

2

3

4

5

Photo	LF Code	Notes	Suitable for	For machine model
1	**1449012**	---	GRIMAC	G11
2	**1549023**	110 mm	GRIMAC 1310900002-GR167X	MIA - NEW CIALDAVAPOR
3	**1449697**	---	GRIMAC 1260100019-GR271	ZOLAII
4	**1449699**	---	GRIMAC 1260100017-GR167	ECLISSE - G10 - TWENTY - ZOLAI - ZOLAII
5	**1449332**	---	GRIMAC A2200012	G11 - MIA - NEW CIALDAVAPOR

TUBI VAPORE-ACQUA ISOMAC
STEAM/WATER PIPES ISOMAC
DAMPF/WASSERROHRE ISOMAC
TUBOS VAPOR/AGUA ISOMAC

1

2

Photo	LF Code	Notes	Suitable for	For machine model
1	**1549055**	S.STEEL ø 10 mm - 240 mm	ISOMAC IS000680	MILLENNIUM - MONDIALE - TEA
2	**1549056**	S.STEEL ø 10 mm - 205 mm	ISOMAC IS000703	MILLENNIUM - MONDIALE - TEA - ZAFFIRO

TUBI VAPORE-ACQUA ITALCREM
STEAM-WATER PIPES ITALCREM
DAMPF-/WASSERROHRE ITALCREM
TUBOS VAPOR-AGUA ITALCREM

1

2

3

4

Photo	LF Code	Notes	Suitable for	For machine model
1	**1449853**	---	ITALCREM 08165722	CAPRI
2	**1449336**	---	ITALCREM 08207400	CAPRI
3	**1449854**	---	ITALCREM 08206013	CAPRI
4	**1449855**	ø 18 mm - 47 mm	ITALCREM 08207506	CAPRI

TUBI VAPORE-ACQUA JURA
STEAM-WATER TUBES JURA
DAMPF-/WASSERROHREJURA
TUBOS VAPOR-AGUA JURA

1

Photo	LF Code	Notes	Suitable for	For machine model
1	**1549060**	---	JURA 63697	E30 - E40 - E45 - E5 - E50 - E55 - E60 - E65 - E70 - E74 - E75 - S50

Tubi vapore-acqua macchine caffè
Steam-water pipes coffee machines
Wasser/Dampfrohre f. Kaffeemaschinen
Tubos vapor-agua máquinas de café

TUBI VAPORE-ACQUA LAVAZZA
STEAM-WATER PIPES LAVAZZA
DAMPF-/WASSERROHRE LAVAZZA
TUBOS VAPOR-AGUA LAVAZZA

1

2

3

Photo	LF Code	Notes	Suitable for	For machine model
1	**1449265**	S.STEEL ø 8 mm - 290 mm	LAVAZZA 10066303	LB4700 - LB4700R - LB4701R
2	**1549007**	S.STEEL ø 10 mm - 230 mm	LAVAZZA 10087341	LB4600
3	**1549026**	ø 8 mm	LAVAZZA 10084118	LB4600

TUBI VAPORE-ACQUA LAVAZZA
STEAM-WATER PIPES LAVAZZA
DAMPF-/WASSERROHRE LAVAZZA
TUBOS VAPOR-AGUA LAVAZZA

1

2

3

4

5

Photo	LF Code	Notes	Suitable for	For machine model
1	**1549008**	M8	LAVAZZA 10065952	LB4100 - LB4103 - LB4700R - LB4701R
2	**1449332**	---	LAVAZZA 10084097	LB4600
3	**1449317**	---	LAVAZZA 10061918	LB4600
4	**1449097**	M10	LAVAZZA 10066301	LB4700 - LB4700R - LB4701R
5	**1549058**	---	LAVAZZA 10066490	LB4100 - LB4103

TUBI VAPORE-ACQUA MAIRALI
STEAM-WATER PIPES MAIRALI
DAMPF-/WASSERROHRE MAIRALI
TUBOS VAPOR-AGUA MAIRALI

1

2

3

4

Photo	LF Code	Notes	Suitable for	For machine model
1	**1449853**	---	MAIRALI 08165722	GIULIETTA
2	**1449336**	---	MAIRALI 08207400	GIULIETTA
3	**1449854**	---	MAIRALI 08206013	GIULIETTA
4	**1449855**	ø 18 mm - 47 mm	MAIRALI 08207506	GIULIETTA

TUBI VAPORE-ACQUA MARCFI-ANCAS
STEAM-WATER PIPES MARCFI-ANCAS
DAMPF-/WASSERROHRE MARCFI-ANCAS
TUBOS VAPOR-AGUA MARCFI-ANCAS

1

2

3

Photo	LF Code	Notes	Suitable for	For machine model
1	**1449059**	---	MARCFI-ANCAS BM-2113	---
2	**1449060**	---	MARCFI-ANCAS BM-2104	---
3	**1449057**	---	MARCFI-ANCAS BM-2074	---

TUBI VAPORE-ACQUA MARZOCCO
STEAM-WATER PIPES MARZOCCO
DAMPF-/WASSERROHRE MARZOCCO
TUBOS VAPOR-AGUA MARZOCCO

1

2

3

4

Photo	LF Code	Notes	Suitable for	For machine model
1	**1449108**	---	MARZOCCO L171	FB/70 - LINEA
2	**1449849**	---	MARZOCCO L170/SX	FB/70 - LINEA
3	**1449020**	---	MARZOCCO L173	FB/70 - LINEA
4	**5056483**	---	MARZOCCO L173	FB/70 - LINEA

TUBI VAPORE-ACQUA MCE
STEAM-WATER PIPES MCE
DAMPF-/WASSERROHRE MCE
TUBOS VAPOR-AGUA MCE

1

2

3

Photo	LF Code	Notes	Suitable for	For machine model
1	**1449093**	---	MCE 25762	START
2	**1449099**	---	MCE 25761	START
3	**1449116**	---	MCE 30250	START

TUBI VAPORE-ACQUA NUOVA SIMONELLI
STEAM-WATER PIPES NUOVA SIMONELLI
DAMPF-/WASSERROHRE NUOVA SIMONELLI
TUBOS VAPOR-AGUA NUOVA SIMONELLI

1

2

3

4

Photo	LF Code	Notes	Suitable for	For machine model
1	**1549027**	S.STEEL ø 10 mm - 295 mm	NUOVA SIMONELLI 75006060	AURELIA II
2	**1449869**	---	NUOVA SIMONELLI 75006037.1	APPIA - MACCUP - MAC2000 - PROGRAMVIP
3	**1449033**	---	NUOVA SIMONELLI 78006005	MAC2000 - PREMIERMAXI - PROGRAMVIP
4	**1449866**	---	NUOVA SIMONELLI 78006001	OPTIMA - PREMIER

TUBI VAPORE-ACQUA NUOVA SIMONELLI
STEAM-WATER PIPES NUOVA SIMONELLI
DAMPF-/WASSERROHRE NUOVA SIMONELLI
TUBOS VAPOR-AGUA NUOVA SIMONELLI

1

2

3

4

5

Photo	LF Code	Notes	Suitable for	For machine model
1	**1549004**	---	NUOVA SIMONELLI 98007009	APPIA - AURELIA
2	**1449032**	---	NUOVA SIMONELLI 98007008	APPIA - AURELIA
3	**1449210**	---	NUOVA SIMONELLI 78007001	OPTIMA - PREMIER - PREMIERMAXI
4	**1449868**	---	NUOVA SIMONELLI 80007005	MAC2000 - PROGRAMVIP
5	**1449034**	---	NUOVA SIMONELLI 78007005	PREMIERMAXI

TUBI VAPORE-ACQUA NUOVA SIMONELLI
STEAM-WATER PIPES NUOVA SIMONELLI
DAMPF-/WASSERROHRE NUOVA SIMONELLI
TUBOS VAPOR-AGUA NUOVA SIMONELLI

1

2

3

4

5

Photo	LF Code	Notes	Suitable for	For machine model
1	**5051782**	---	NUOVA SIMONELLI 75006038.1	AURELIA II
2	**1449065**	---	NUOVA SIMONELLI 75006038	APPIA - AURELIA - AURELIA II
3	**1383002**	---	NUOVA SIMONELLI 75006015	MAC2000 - PREMIERMAXI - PROGRAMVIP
4	**1383001**	---	NUOVA SIMONELLI 07300030	OPTIMA - PREMIER
5	**1449036**	---	NUOVA SIMONELLI 82007003	APPIA - AURELIA - AURELIA II

TUBI VAPORE-ACQUA ORCHESTRALE
STEAM-WATER PIPES ORCHESTRALE
DAMPF-/WASSERROHRE ORCHESTRALE
TUBOS VAPOR-AGUA ORCHESTRALE

1

2

3

4

Photo	LF Code	Notes	Suitable for	For machine model
1	**1549029**	S.STEEL ø 10 mm - 260 mm	ORCHESTRALE D25763120	ETNICA
2	**1549030**	S.STEEL ø 10 mm - 250 mm	ORCHESTRALE D25763122	PHONICA
3	**1549031**	S.STEEL 114 mm	ORCHESTRALE D25763127	ETNICA
4	**1449332**	---	ORCHESTRALE D25763142	ETNICA - PHONICA

TUBI VAPORE-ACQUA PAVONI
STEAM-WATER PIPES PAVONI
DAMPF-/WASSERROHRE PAVONI
TUBOS VAPOR-AGUA PAVONI

1

2

3

4

5

Photo	LF Code	Notes	Suitable for	For machine model
1	**1449451**	---	PAVONI 394314R	BAR - BART - CAFE - HOTEL
2	**1449818**	---	PAVONI 3430264	P1
3	**1449817**	---	PAVONI 394316	P3 - P6
4	**1449069**	---	PAVONI 3432374	EUROPICCOLA - PROFESSIONAL
5	**5501266**	---	PAVONI 0P227430550	ESPRESSO PLUS - EUROBAR

TUBI VAPORE-ACQUA PAVONI
STEAM-WATER PIPES PAVONI
DAMPF-/WASSERROHRE PAVONI
TUBOS VAPOR-AGUA PAVONI

1

2

3

4

5

6

Photo	LF Code	Notes	Suitable for	For machine model
1	**1449391**	---	PAVONI 395518	BAR - BART - CAFE - PUB
2	**1449816**	---	PAVONI 394312	P1 - P3 - P90
3	**1449394**	---	PAVONI 3140204	---
4	**1449452**	---	PAVONI 3141487	BAR - BART - CAFE - HOTEL
5	**1449453**	---	PAVONI 3141497	BAR - BART - CAFE - HOTEL
6	**1449317**	---	PAVONI 455005	BAR - BART - CAFE - HOTEL

TUBI VAPORE-ACQUA PROMAC
STEAM-WATER PIPES PROMAC
DAMPF-/WASSERROHRE PROMAC
TUBOS VAPOR-AGUA PROMAC

1

2

3

Photo	LF Code	Notes	Suitable for	For machine model
1	**1449051**	---	PROMAC 10706017	CLUB
2	**1449053**	---	PROMAC 10049014	CLUB - GREEN - COMPACT
3	**1449864**	---	PROMAC 10706026	CLUB - GREEN - COMPACT

TUBI VAPORE-ACQUA RANCILIO
STEAM-WATER PIPES RANCILIO
DAMPF-/WASSERROHRE RANCILIO
TUBOS VAPOR-AGUA RANCILIO

1

2

3

4

Photo	LF Code	Notes	Suitable for	For machine model
1	**1449051**	---	RANCILIO 10706017	S20 - S24 - S26 - S27
2	**1449863**	---	RANCILIO 10706024	MILLENNIUM
3	**1449865**	---	RANCILIO 10706024	CLASSE10 - CLASSE6 - CLASSE8 - MILLENIUM
4	**1449811**	---	RANCILIO 10706003	CLASSE10 - CLASSE6 - CLASSE8 - EPOCA - MIDI - TECNA - Z11

TUBI VAPORE-ACQUA RANCILIO
STEAM-WATER PIPES RANCILIO
DAMPF-/WASSERROHRE RANCILIO
TUBOS VAPOR-AGUA RANCILIO

1

2

3

4

Photo	LF Code	Notes	Suitable for	For machine model
1	**1449141**	ø 6 mm - 180 mm	RANCILIO 10049046	SILVIA
2	**1549057**	ø 10 mm - 210 mm	RANCILIO 10049063	SILVIA NEW
3	**1449053**	---	RANCILIO 10049014	CLASSE10 - CLASSE8
4	**1449864**	---	RANCILIO 10706026	MILLENNIUM

TUBI VAPORE-ACQUA RDL
STEAM-WATER PIPES RDL
DAMPF-/WASSERROHRE RDL
TUBOS VAPOR-AGUA RDL

1

Photo	LF Code	Notes	Suitable for	For machine model
1	**1549003**	---	RDL 2135004Y	MINI - MINICAP

TUBI VAPORE-ACQUA RENEKA
STEAM-WATER PIPES RENEKA
DAMPF-/WASSERROHRE RENEKA
TUBOS VAPOR-AGUA RENEKA

1

2

3

4

5

Photo	LF Code	Notes	Suitable for	For machine model
1	**1449395**	---	RENEKA 9008193	CONCEPT - PILOT - PLUS - PRESTIGE - SINGLE - VIVA - VIVAE
2	**1449140**	---	RENEKA 9003697	CONCEPT - PILOT - VIVA - VIVAE - VIVAS - XL
3	**1449396**	---	RENEKA 9003699	PLUS - PRESTIGE - VIVAE - VIVAS
4	**1449018**	---	RENEKA 9001890	CONCEPT - PILOT - VIVA - VIVAE - VIVAS - XL
5	**1449317**	---	RENEKA 9001890	CONCEPT - PILOT - VIVA - VIVAE - VIVAS - XL

TUBI VAPORE-ACQUA ROYAL
STEAM-WATER PIPES ROYAL
DAMPF-/WASSERROHRE ROYAL
TUBOS VAPOR-AGUA ROYAL

1

2

Photo	LF Code	Notes	Suitable for	For machine model
1	**1449167**	H 105 mm	ROYAL 2520015	DIADEMA - SYNCHRO
2	**1449332**	---	ROYAL	DIADEMA - SYNCHRO

TUBI VAPORE-ACQUA SAB ITALIA
STEAM-WATER PIPES SAB ITALIA
DAMPF-/WASSERROHRE SAB ITALIA
TUBOS VAPOR-AGUA SAB ITALIA

1

Photo	LF Code	Notes	Suitable for	For machine model
1	**1449216**	---	SAB ITALIA SVECL003	JOLLY

TUBI VAPORE-ACQUA SAECO
STEAM-WATER PIPES SAECO
DAMPF-/WASSERROHRE SAECO
TUBOS VAPOR-AGUA SAECO

1 2 3 4 5 6

Photo	LF Code	Notes	Suitable for	For machine model
1	**1449134**	---	SAECO 147430100	AROMA - ESPRESSODREAM - IDEA - MAGIC - MAGICCOMBI
2	**5500801**	---	SAECO 147430150	AROMA - CAFEBUONO - GRANCREMA - IDEA - MONTECARLO
3	**1549061**	---	SAECO 11001769	INTELIA - MINUTO - ODEA GO - POEMIA - XSMALL
4	**1449132**	---	SAECO 11011504	ODEA - TALEA
5	**5501266**	---	SAECO 227430550	AROMA - GRANCREMA - MAGIC
6	**5038346**	---	SAECO 227430530	AROMA - MAGIC CAPPUCCINO - MAGIC COMBI - MAGIC ESPRESSO

TUBI VAPORE-ACQUA SAECO
STEAM-WATER PIPES SAECO
DAMPF-/WASSERROHRE SAECO
TUBOS VAPOR-AGUA SAECO

1 2 3 4 5 6

Photo	LF Code	Notes	Suitable for	For machine model
1	**1449133**	---	SAECO 11001620	ODEA - TALEA
1	**1449125**	---	SAECO 142271350	INCANTO - OFFICEONE
2	**1449129**	---	SAECO 11000593	PRIMEA
3	**1449174**	---	SAECO 4332049000	NINA - NINABAR
4	**1449317**	---	SAECO WGA5001005000	AROMA
5	**5068614**	ø 6 mm	SAECO 11027861	INTELIA
6	**1549021**	ø 10 mm - 275 mm	SAECO WGA8003013010	AROMA

TUBI VAPORE-ACQUA SAN MARCO
STEAM-WATER PIPES SAN MARCO
DAMPF-/WASSERROHRE SAN MARCO
TUBOS VAPOR-AGUA SAN MARCO

1

2

3

4

5

6

Photo	LF Code	Notes	Suitable for	For machine model
1	**1449852**	---	SAN MARCO 206320	85 - LEVA
2	**1449114**	S.STEEL ø 10 mm - 210 mm	SAN MARCO 206224	95
3	**1449110**	S.STEEL ø 10 mm - 250 mm	SAN MARCO 206414	100
4	**1449400**	---	SAN MARCO 206903	105 - NEW 105
5	**1449851**	---	SAN MARCO	85 - 95
6	**1449401**	---	SAN MARCO 507132	100 - 105 - 85 - 95 - LEVA

TUBI VAPORE-ACQUA SANREMO
STEAM-WATER PIPES SANREMO
DAMPF-/WASSERROHRE SANREMO
TUBOS VAPOR-AGUA SANREMO

1

2

3

4

Photo	LF Code	Notes	Suitable for	For machine model
1	**1549043**	S.STEEL ø 10 mm - 245 mm	SANREMO 10422136A	AMALFI - CAPRI
2	**1549044**	S.STEEL ø 10 mm - 280 mm	SANREMO 14402286	MILANO LX - VERONA
3	**1549042**	108 mm	SANREMO 10402145	AMALFI - CAPRI - PISA - VENEZIA
4	**1449332**	---	SANREMO 10402140	AMALFI - CAPRI - MILANO LX - PISA - TORINO - TREVISO

TUBI VAPORE-ACQUA SCALA
STEAM-WATER PIPES SCALA
DAMPF-/WASSERROHRE SCALA
TUBOS VAPOR-AGUA SCALA

1

2

3

4

5

Photo	LF Code	Notes	Suitable for	For machine model
1	**1549063**	CHROME ø 8 mm - 250 mm	SCALA C-0177	EROICA
2	**1549062**	CHROME ø 10 mm - 220 mm	SCALA C-0723	IRIS
3	**1449049**	S.STEEL ø 10 mm - 230 mm	SCALA C-0278	BUTTERFLY - CARMEN - EROICA - NORMA
4	**1449394**	M10x1	SCALA C-0178	EROICA
5	**5060635**	---	SCALA C-0277	BUTTERFLY - CARMEN - EROICA - NORMA

Tubi vapore-acqua macchine caffè
Steam-water pipes coffee machines
Wasser/Dampfrohre f. Kaffeemaschinen
Tubos vapor-agua máquinas de café

TUBI VAPORE-ACQUA SPAZIALE
STEAM/WATER PIPES SPAZIALE
DAMPF/WASSERROHRE SPAZIALE
TUBOS VAPOR/AGUA SPAZIALE

1

2

3

4

5

6

Photo	LF Code	Notes	Suitable for	For machine model
1	**1449074**	S.STEEL ø 10 mm - 235 mm	SPAZIALE 07833	NEW - S5 - S5COMPACT
2	**1449078**	---	SPAZIALE 06591	S3
3	**1449309**	---	SPAZIALE 04473	SELETRON PLUS
4	**1449213**	S.STEEL ø 10 mm - 305 mm	SPAZIALE 08962	S40
5	**1549028**	S.STEEL ø 10 mm - 220 mm	SPAZIALE 07832	S1
6	**1449077**	---	SPAZIALE 07546	NEW - RAPID - SPAZIO - SUPER3000 - S3

TUBI VAPORE-ACQUA SPAZIALE
STEAM/WATER PIPES SPAZIALE
DAMPF/WASSERROHRE SPAZIALE
TUBOS VAPOR/AGUA SPAZIALE

1

2

3

4

5

6

Photo	LF Code	Notes	Suitable for	For machine model
1	**1449341**	---	SPAZIALE 01449	NEW - RAPID - SPAZIO - SUPER3000 - S3
2	**1449342**	---	SPAZIALE 01448	NEW - RAPID - SPAZIO - SUPER3000 - S3
3	**5051782**	---	SPAZIALE 07048	S3 - S40 - S5 - S5 COMPACT
4	**1449076**	---	SPAZIALE 08264	S5 - S5 COMPACT - S40
5	**1449318**	---	SPAZIALE 06392	S1 - S3 - S5 -S40
6	**1449317**	---	SPAZIALE 06411	S1 - S3 - S5 -S40

TUBI VAPORE-ACQUA VIBIEMME
STEAM/WATER PIPES VIBIEMME
DAMPF/WASSERROHRE VIBIEMME
TUBOS VAPOR/AGUA VIBIEMME

1

2

3

4

Photo	LF Code	Notes	Suitable for	For machine model
1	**1449064**	ø 8 mm - 240 mm	VIBIEMME TUBIVALFREVEV	EVOLUTION - KOMETA - MINIMAX - REVOLUTION - SILVER
2	**1449860**	ø 8 mm - 240 mm	VIBIEMME TUBIVALF	DOSAPLUS - MERCURY - REPLICA
3	**1549041**	DX ø 10 mm - 255 mm	VIBIEMME TUBILANCVADX	CHIMAERA - CUBO - REPLICA
4	**5057693**	SX ø 8 mm - 255 mm	VIBIEMME TUBILANCVASX	CHIMAERA - CUBO - REPLICA

TUBI VAPORE-ACQUA VIBIEMME
STEAM/WATER PIPES VIBIEMME
DAMPF/WASSERROHRE VIBIEMME
TUBOS VAPOR/AGUA VIBIEMME

1 2 3 4 5 6

Photo	LF Code	Notes	Suitable for	For machine model
1	**1449366**	---	VIBIEMME	REPLICA
2	**1549036**	DX ø 8 mm - 330 mm	VIBIEMME TUBILANCVADXK	REPLICA
3	**1549037**	SX ø 8 mm - 330 mm	VIBIEMME TUBILANCVASXK	REPLICA
4	**1549034**	DX ø 10 mm - 510 mm	VIBIEMME TUBILANVADXKI	LOLLO
5	**1549035**	SX ø 10 mm - 510 mm	VIBIEMME TUBIVALFSKONW	LOLLO
6	**1549038**	ø 8 mm - 260 mm	VIBIEMME TUBILADOMSU	DOMOBARJUNIOR - DOMOBARSUPER

TUBI VAPORE-ACQUA VIBIEMME
STEAM/WATER PIPES VIBIEMME
DAMPF/WASSERROHRE VIBIEMME
TUBOS VAPOR/AGUA VIBIEMME

1 2 3 4 5 6

Photo	LF Code	Notes	Suitable for	For machine model
1	**1449304**	---	VIBIEMME TUBIP727	CHIMAERA - CUBO - DOMOBARJUNIOR - DOMOBARSUPER - LOLLO
2	**1549039**	ø 8 mm - 150 mm	VIBIEMME TUBIACSF	DOSAPLUS - MERCURY - REPLICA
3	**1449857**	---	VIBIEMME	REPLICA
4	**1449016**	---	VIBIEMME RACCBUROVA	CHIMAERA - CUBO - DOSAPLUS - EVOLUTION - KOMETA - LOLLO
5	**1549040**	---	VIBIEMME RACCBUROVA2FO	CHIMAERA - CUBO - REPLICA
6	**1449332**	---	VIBIEMME RACCRBUROAC	DOSAPLUS - LOLLO - MERCURY - REPLICA

TUBI VAPORE-ACQUA VICTORIA ARDUINO
STEAM/WATER PIPES VICTORIA ARDUINO
DAMPF/WASSERROHRE VICTORIA ARDUINO
TUBOS VAPOR/AGUA VICTORIA ARDUINO

1 2 3 4 5 6

Photo	LF Code	Notes	Suitable for	For machine model
1	**1449869**	---	VICTORIA ARDUINO 75006037	ADONIS
2	**1549004**	---	VICTORIA ARDUINO 98007009	ADONIS
3	**1449032**	---	VICTORIA ARDUINO 98007007	ADONIS
4	**5085860**	ø 10 mm	VICTORIA ARDUINO KLVCT001	VA388 BLACK EAGLE
5	**1549064**	105 mm	VICTORIA ARDUINO 98007025	VA388 BLACK EAGLE
6	**1449033**	---	VICTORIA ARDUINO 78006005	ATHENALEVA - ATHENAS

TUBI VAPORE-ACQUA VICTORIA ARDUINO
STEAM-WATER PIPES VICTORIA ARDUINO
DAMPF-/WASSERROHRE VICTORIA ARDUINO
TUBOS VAPOR-AGUA VICTORIA ARDUINO

1

2

3

Photo	LF Code	Notes	Suitable for	For machine model
1	**1383002**	---	VICTORIA ARDUINO 75006015	ATHENALEVA - ATHENAS
2	**1449065**	---	VICTORIA ARDUINO 75006038	ADONIS
3	**1449036**	---	VICTORIA ARDUINO 82007003	ADONIS

TUBI VAPORE-ACQUA VISACREM
STEAM/WATER PIPES VISACREM
DAMPF/WASSERROHRE VISACREM
TUBOS VAPOR/AGUA VISACREM

1

2

3

4

Photo	LF Code	Notes	Suitable for	For machine model
1	**1449853**	---	VISACREM 08165722	NERA
2	**1449336**	---	VISACREM 08207400	NERA
3	**1449854**	---	VISACREM 08206013	NERA
4	**1449855**	ø 18 mm - 47 mm	VISACREM 08207506	NERA

TUBI VAPORE-ACQUA WEGA
STEAM/WATER PIPES WEGA
DAMPF/WASSERROHRE WEGA
TUBOS VAPOR/AGUA WEGA

1

2

3

4

5

Photo	LF Code	Notes	Suitable for	For machine model
1	**1449103**	S.STEEL ø 10 mm - 255 mm	WEGA WY25763009	SPHERA
2	**1449091**	S.STEEL ø 8 mm - 270 mm	WEGA WY56119001	AIRY - ATLAS - ORION - POLARIS - START
3	**1449206**	---	WEGA WY56119024	MININOVA
4	**1449090**	210 mm	WEGA WY56119005	AIRY - COMBINOVA - FORMULAMILANO - JUNIOR - NOVA
5	**1449095**	255 mm	WEGA WY56119006	---

TUBI VAPORE-ACQUA WEGA
STEAM-WATER PIPES WEGA
DAMPF-/WASSERROHRE WEGA
TUBOS VAPOR-AGUA WEGA

1

2

3

4

5

6

Photo	LF Code	Notes	Suitable for	For machine model
1	**1449096**	---	WEGA WY25762A	COMBI NOVA - EURO2000 - FORMULA MILANO - GEMINI - JUNIOR
2	**1549008**	---	WEGA WY25763080	ATLAS10
3	**1449093**	---	WEGA W25762	---
4	**1449097**	---	WEGA WY25763002	COLOSSEUM - CONCEPT - ESPRESSA - SPHERA
5	**1449099**	---	WEGA WY25761	COMBI NOVA - EURO2000 - FORMULA MILANO - GEMINI - JUNIOR
6	**1449116**	H 47 mm	WEGA WY30250	COMBI NOVA - EURO2000 - FORMULA MILANO - GEMINI - JUNIOR

TUBI VAPORE-ACQUA ZACCONI
WATER-STEAM TUBES ZACCONI
DAMPF- UND WASSERSCHLÄUCHE ZACCONI
TUBOS VAPOR-AGUA ZACCONI

1

Photo	LF Code	Notes	Suitable for	For machine model
1	**1549059**	CHROME ø 7 mm	ZACCONI 44	ESPRESSO BABY - RIVIERA

More than just paper catalogues

Browse through the digital and interactive catalogues available on the **LF website** and **LF Group app**

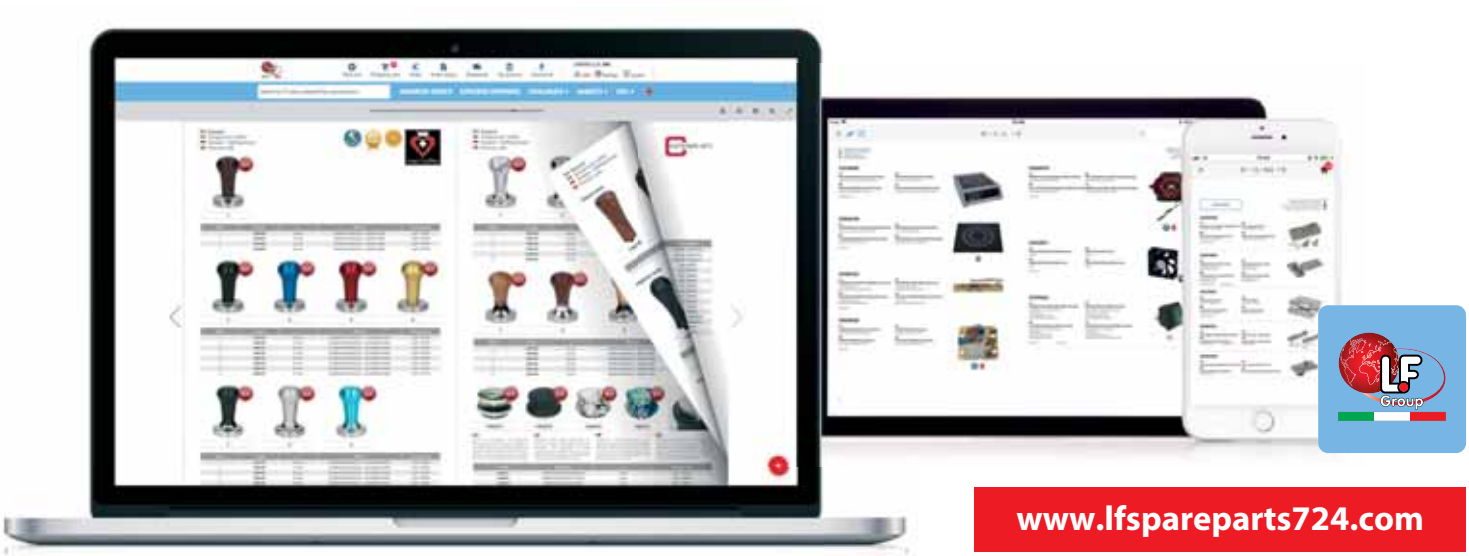

www.lfspareparts724.com

Utensili
Tools
Utensilien
Utensilios

UTENSILI
TOOLS
WERKZEUGE
UTENSILIOS

1

2

3

4

5

Photo	LF Code	Notes
1	**1505002**	EXTRACTOR FOR FILTER S.STEEL - ESTRATTORE PER FILTRI
2	**1394001**	UNIVERSAL WRENCH - CHIAVE UNIVERSALE
3	**1505001**	4 HOOKS - SET 4 UNCINI
4	**3394392**	INSPECTION MIRROR WITH LIGHT - SPECCHIETTO DA ISPEZIONE
5	**3394906**	INSPECTION MIRROR - SPECCHIETTO DA ISPEZIONE

Valvole a sfera e accessori
Ball valves and accessories
Kugelhähne und Zubehör
Válvulas de esfera y accesorios

VALVOLE A SFERA
BALL VALVES
KUGELVENTILE
VÁLVULAS ESFERA

1

2

3

4

Photo	LF Code	Connections	Suitable for	For machine model
1	**3526706**	ø 1/8"FF	UNIVERSAL	---
1	**3526698**	ø 1/4"FF	BEZZERA 7451501	BZ35 - BZ40 - B2000 - B2013 - B3000 - B4000 - B6000
1	**3526698**	ø 1/4"FF	SPAZIALE 08103	S5 COMPACT - S8 COMPACT - S9 COMPACT
1	**3526702**	ø 3/8"FF	UNIVERSAL	---
1	**3526703**	ø 1/2"FF	UNIVERSAL	---
1	**3526707**	ø 3/4"FF	UNIVERSAL	---
2	**3526697**	ø 1/8"MF	SAN MARCO 202241	NEW 105 - 100 - 105 - 85 - 95
2	**3526699**	ø 1/4"MF	MANY BRANDS - MOLTI MARCHI	SEVERAL APPLICATIONS - MOLTE APPLICAZIONI
2	**3526244**	ø 1/4"M-1/8"F	SAN MARCO 202244	95 - 105
2	**3526704**	ø 3/8"MF	MARZOCCO L164	FB70 - FB80 - GB5 - GS3 - LINEA - MISTRAL
2	**3526704**	ø 3/8"MF	NUOVA SIMONELLI 09000016	APPIA - AURELIA - PREMIER
2	**3526704**	ø 3/8"MF	VICTORIA ARDUINO 09000016	ADONIS - ATHENA - ATHENA LEVA
2	**3526705**	ø 1/2"MF	UNIVERSAL	---
2	**3356083**	ø 3/4"MF	UNIVERSAL	---
3	**5048593**	ø 1/4"MM	ASTORIA/CMA 20354	SEVERAL APPLICATIONS - MOLTE APPLICAZIONI
3	**5048593**	ø 1/4"MM	LAVAZZA 10066225	LB4700 - LB4700R - LAVAZZA LB4701R - LB4711 - LB4712
3	**5048593**	ø 1/4"MM	MCE 20354	START
3	**5048593**	ø 1/4"MM	ORCHESTRALE D20354	ETNICA - PHONICA
3	**5048593**	ø 1/4"MM	WEGA WY20354	SEVERAL APPLICATIONS - MOLTE APPLICAZIONI
4	**1525002**	ø 1/4"M-1/4"F	ASTORIA/CMA 20227003	PLUS4YOU

VALVOLE DI ESPANSIONE E DI NON RITORNO "UNIVERSALI"
EXPANSION AND NON-RETURN VALVES "UNIVERSAL"
EXPANSIONS UND RÜCKSCHLAGVENTILE "UNIVERSELL"
VÁLVULAS RETENCIÓN Y DE VÁLVULA EXPANSIÓN "UNIVERSALES"

1

2

3

4

5

Photo	LF Code	Dimensions
1	**1523036**	ø 1/8"M-1/8"F
2	**1523700**	ø 1/8"M-1/8"M
3	**3349281**	ø 3/8"F-3/8"F
4	**3349283**	ø 3/4"F-3/4"F
5	**1523072**	ø 3/8"M

VALVOLE DI ESPANSIONE E DI NON RITORNO ASTORIA/CMA
EXPANSION AND NON-RETURN VALVES ASTORIA/CMA
EXPANSIONS-UND RÜCKSCHLAGVENTILE ASTORIA/CMA
VÁLVULAS EXPANSIÓN Y RETENCIÓN ASTORIA/CMA

1

2

3

4

5

6

Photo	LF Code	Dimensions	Suitable for	For machine model
1	**1523700**	ø 1/8"M-1/8"M	ASTORIA/CMA 20358	CK - CKE - CKX - CKXE
2	**1720019**	ø 1/4"M-3/8"M	ASTORIA/CMA 56152	---
3	**1523440**	ø 1/8"M-1/8"M	ASTORIA/CMA 56300	---
4	**1523410**	ø 1/8"M-1/8"M-1/8"M	ASTORIA/CMA 56210	CK - CKE - CKX - CKXE
5	**1523403**	ø 1/4"M-1/4"M-3/8"M	ASTORIA/CMA 20361	ARGENTA - BRAVA - CALYPSO - DENISE - DIVINA - DORA
6	**1523404**	---	ASTORIA/CMA 20353	RAPALLO AL

VALVOLE DI ESPANSIONE E DI NON RITORNO BEZZERA
EXPANSION AND NON-RETURN VALVES BEZZERA
EXPANSIONS-UND RÜCKSCHLAGVENTILE BEZZERA
VÁLVULAS EXPANSIÓN Y RETENCIÓN BEZZERA

1

Photo	LF Code	Dimensions	Suitable for	For machine model
1	**1523407**	---	BEZZERA 7452505.01R	B2000 - B3000 - B4000

VALVOLE DI ESPANSIONE E DI NON RITORNO BFC
EXPANSION AND NON-RETURN VALVES BFC
EXPANSIONS- UND RÜCKSCHLAGVENTILE BFC
VÁLVULAS EXPANSIÓN Y DE RETENCIÓN BFC

1

2

Photo	LF Code	Dimensions	Suitable for	For machine model
1	**1523561**	ø 1/4"M 10-14 bar	BFC 0510178	BUTTERFLY - CARMEN - CLASSICA - DELUX - EROICA
2	**1720011**	ø 7/12 mm - H 20 mm	BFC 0510166	CLASSICA - DELUX - GALILEO - GRANDOGE - IMOLA - LA VITTORIA

VALVOLE DI ESPANSIONE E DI NON RITORNO BIANCHI
EXPANSION AND NON-RETURN VALVES BIANCHI
EXPANSIONS-UND RÜCKSCHLAGVENTILE BIANCHI
VÁLVULAS EXPANSIÓN Y DE RETENCIÓN BIANCHI

1

Photo	LF Code	Dimensions	Suitable for	For machine model
1	**1515010**	ø 1/4"M	BIANCHI 04056736	LUCIA - SARA

VALVOLE DI ESPANSIONE E DI NON RITORNO BRASILIA
EXPANSION AND NON-RETURN VALVES BRASILIA
EXPANSIONS- UND RÜCKSCHLAGVENTILE BRASILIA
VÁLVULAS EXPANSIÓN Y DE RETENCIÓN BRASILIA

1

2

3

4

Photo	LF Code	Dimensions	Suitable for	For machine model
1	**1523700**	ø 1/8"M-1/8"M	BRASILIA 01119.4.00.09	MINICLASSIC - PORTOFINO LEVA
2	**1523561**	ø 1/4"M	BRASILIA 01182.4.00.09	BELLEEPOQUE
3	**1523012**	ø 1/4"M-3/8"M	BRASILIA 12845.4.00.09	DECURTIS - FIRENZE SL - PORTOFINO LEVA - ROMA
4	**1523404**	---	BRASILIA 08605.0.00.04	DECURTIS - PORTOFINO LEVA

VALVOLE DI ESPANSIONE E DI NON RITORNO CASADIO
EXPANSION AND NON-RETURN VALVES CASADIO
EXPANSIONS- UND RÜCKSCHLAGVENTILE CASADIO
VÁLVULAS EXPANSIÓN Y DE RETENCIÓN CASADIO

1

2

3

4

Photo	LF Code	Dimensions	Suitable for	For machine model
1	**1523067**	ø 1/8"M-1/8"M	CASADIO 532392200	DAFNE
2	**1523066**	---	CASADIO 537053200	DIECI - DODICI - VENTI
3	**1523049**	---	CASADIO 418012028	DAFNE
4	**1523015**	---	CASADIO 418917020	DAFNE

VALVOLE DI ESPANSIONE E DI NON RITORNO CIMBALI
EXPANSION AND NON-RETURN VALVES CIMBALI
EXPANSIONS-UND RÜCKSCHLAGVENTILE CIMBALI
VÁLVULAS EXPANSIÓN Y DE RETENCIÓN CIMBALI

1

2

3

4

5

Photo	LF Code	Dimensions	Suitable for	For machine model
1	**1720001**	ø 1/8"M-1/8"M	CIMBALI 532-392-810	M39GT
2	**1523411**	ø 1/2"F-1/2"F	CIMBALI	---
3	**1523404**	---	CIMBALI 460-029-010	M20 LEVA - M21 LEVA
4	**1523066**	---	CIMBALI 958-070-000	M24 - M39TE
5	**1523049**	---	CIMBALI 418-012-028	JUNIOR - M20 - M21JUNIOR - M25 - M27 - M27 2008 - M28

VALVOLE DI ESPANSIONE E DI NON RITORNO CIMBALI
EXPANSION AND NON-RETURN VALVES CIMBALI
EXPANSIONS- UND RÜCKSCHLAGVENTILE CIMBALI
VÁLVULAS RETENCIÓN Y DE VÁLVULAS EXPANSIÓN CIMBALI

1

2

3

Photo	LF Code	Dimensions	Suitable for	For machine model
1	**1523015**	---	CIMBALI 418-917-020	M20 - M27 - M28 - M29 - M30 - M31
2	**1523016**	---	CIMBALI 537-017-800	JUNIOR - M20 - M27 - M28 - M30
3	**1523019**	---	CIMBALI 415-932-010	DOMUS - M21 - M28 - M29 - M30 - M31 - M32 - M39 - M39GT

VALVOLE DI ESPANSIONE E DI NON RITORNO CONTI
EXPANSION AND NON-RETURN VALVES CONTI
EXPANSIONS-UND RÜCKSCHLAGVENTILE CONTI
VÁLVULAS EXPANSIÓN Y DE RETENCIÓN CONTI

1

2

3

4

Photo	LF Code	Dimensions	Suitable for	For machine model
1	**1523034**	ø 1/8"M-1/8"M	CONTI 4030652	TWIN STAR2
2	**1523519**	ø 1/4"M-3/8"M	CONTI 409125	CONTICLUB - SSK2 - TWIN STAR2 - XEOS
3	**1523033**	ø 1/4"M-1/4"M	CONTI 403470	CONTICLUB
4	**1523514**	ø 1/4"F-1/4"M	CONTI 409835	CLASSICA - CONTICLUB - SSK2 - XEOS

VALVOLE DI ESPANSIONE E DI NON RITORNO DELONGHI
EXPANSION AND NON-RETURN VALVES DELONGHI
EXPANSIONS- UND RÜCKSCHLAGVENTILE DELONGHI
VÁLVULAS DE EXPANSIÓN Y DE RETENCIÓN DELONGHI

1

2

3

Photo	LF Code	Dimensions	Suitable for	For machine model
1	**1720020**	---	DELONGHI 7313229481	ECAM23.460.B - ECAM23.463.B - ECAM350.55.B - ECAM44.660.B
2	**1720022**	---	DELONGHI 7313240491	ECAM350.75.S - ECAM650.85.MS - ECAM352.55.SB - ECAM510.55.M
3	**5075578**	---	DELONGHI 7313229491	ECAM28.465 - ETAM36.365.M - ECAM44.664.B - ECAM28.467.B

VALVOLE DI ESPANSIONE E DI NON RITORNO ECM
EXPANSION AND NON-RETURN VALVES ECM
EXPANSIONS-UND RÜCKSCHLAGVENTILE ECM
VÁLVULAS EXPANSIÓN Y DE RETENCIÓN ECM

1

Photo	LF Code	Dimensions	Suitable for	For machine model
1	**1523700**	ø 1/8"M-1/8"M	ECM C229900540	GIOTTO - VENEZIANO

VALVOLE DI ESPANSIONE E DI NON RITORNO ECM MANUFACTURE
EXPANSION AND NON-RETURN VALVES ECM MANUFACTURE
EXPANSIONS-UND RÜCKSCHLAGVENTILE ECM MANUFACTURE
VÁLVULAS EXPANSIÓN Y DE RETENCIÓN ECM MANUFACTURE

1

2

Photo	LF Code	Dimensions	Suitable for	For machine model
1	**1523700**	ø 1/8"M-1/8"M	ECM MANUFACTURE C229900540	CLASSIKA II - ELEKTRONIKA II PROFI - MECHANIKA
2	**1720017**	ø 1/8"M	ECM MANUFACTURE P7000	CLASSIKA II - ELEKTRONIKA II PROFI - MECHANIKA

VALVOLE DI ESPANSIONE E DI NON RITORNO ELEKTRA
EXPANSION AND NON-RETURN VALVES ELEKTRA
EXPANSIONS-UND RÜCKSCHLAGVENTILE ELEKTRA
VÁLVULAS EXPANSIÓN Y DE RETENCIÓN ELEKTRA

1

Photo	LF Code	Dimensions	Suitable for	For machine model
1	**5500498**	ø 1/8"M-1/8"M	ELEKTRA 00422034	CLASSIC - KAPPA - MODERN - SIXTIES

VALVOLE DI ESPANSIONE E DI NON RITORNO EXPOBAR
EXPANSION AND NON-RETURN VALVES EXPOBAR
EXPANSIONS-UND RÜCKSCHLAGVENTILE EXPOBAR
VÁLVULAS EXPANSIÓN Y DE RETENCIÓN EXPOBAR

1

2

Photo	LF Code	Dimensions	Suitable for	For machine model
1	**1523701**	ø 3/8"M-3/8"M	EXPOBAR 65000010	EB61 - ELEN - G10 - MARKUS - MARKUS SILVER - MEGACREM
2	**1523030**	---	EXPOBAR 65000215	OFFICE

VALVOLE DI ESPANSIONE E DI NON RITORNO FAEMA
EXPANSION AND NON-RETURN VALVES FAEMA
EXPANSIONS-UND RÜCKSCHLAGVENTILE FAEMA
VÁLVULAS EXPANSIÓN Y DE RETENCIÓN FAEMA

1

2

3

4

5

6

Photo	LF Code	Dimensions	Suitable for	For machine model
1	**1523561**	ø 1/4"M	FAEMA 2211134651	DUEA - E61 - E64 - E66 - E91 - E92 - P4 - P6
2	**1523067**	ø 1/8"M-1/8"M	FAEMA 532392200	CARISMA
2	**1523513**	ø 3/8"M-3/8"M	FAEMA	E61
3	**1523512**	ø 3/8"M-1/4"M	FAEMA	E61
4	**1523015**	---	FAEMA 418917020	E98 COMPACT
5	**1523016**	---	FAEMA 537017800	E98 COMPACT
5	**1523019**	---	FAEMA 415932010	EMBLEMA - ENOVA - E61 - E98 COMPACT - SMART - STYLEMA
6	**1523049**	---	FAEMA 418012028	CARISMA - ELITE - EMBLEMA - ENOVA - E61 - E98 COMPACT - STYLEMA

VALVOLE DI ESPANSIONE E DI NON RITORNO FIAMMA RST
EXPANSION AND NON-RETURN VALVES FIAMMA RST
EXPANSIONS-UND RÜCKSCHLAGVENTILE FIAMMA RST
VÁLVULAS EXPANSIÓN Y DE RETENCIÓN FIAMMA RST

1

2

Photo	LF Code	Dimensions	Suitable for	For machine model
1	**1720010**	ø 1/4"M	FIAMMA RST 5.0.016.0220	ATLANTIC - MARINA - PRESTIGE
2	**1720011**	ø 7/12 mm - H20 mm	FIAMMA RST 5.0.016.0231	ATLANTIC - MARINA - PRESTIGE

VALVOLE DI ESPANSIONE E DI NON RITORNO FIORENZATO CS
EXPANSION AND NON-RETURN VALVES FIORENZATO CS
EXPANSIONS-UND RÜCKSCHLAGVENTILE FIORENZATO CS
VÁLVULAS EXPANSIÓN Y DE RETENCIÓN FIORENZATO CS

1

2

3

4

5

Photo	LF Code	Dimensions	Suitable for	For machine model
1	**1523701**	ø 3/8"M-3/8"M	FIORENZATO CS A1300109	PIAZZA SAN MARCO
2	**1523068**	ø 1/8"M-1/8"M	FIORENZATO CS A1300056	BRICOLETTA - VOLANTE
3	**1523432**	ø 1/8"M	FIORENZATO CS A1300113	BRICOLETTA - COLOMBINA - VOLANTE
4	**1523043**	ø 1/8"M-7 mm	FIORENZATO CS A1300028	---
5	**1523404**	---	FIORENZATO CS A1200191	PIAZZA SAN MARCO

VALVOLE DI ESPANSIONE E DI NON RITORNO FUTURA
EXPANSION AND NON-RETURN VALVES FUTURA
EXPANSIONS- UND RÜCKSCHLAGVENTILE FUTURA
VÁLVULAS EXPANSIÓN Y DE RETENCIÓN FUTURA

1

2

Photo	LF Code	Dimensions	Suitable for	For machine model
1	**1523561**	ø 1/4"M 10-14 bar	FUTURA 200078	F100
2	**1720011**	ø 7/12 mm - H 20 mm	FUTURA 200145	F100

VALVOLE DI ESPANSIONE E DI NON RITORNO FUTURMAT
EXPANSION AND NON-RETURN VALVES FUTURMAT
EXPANSIONS-UND RÜCKSCHLAGVENTILE FUTURMAT
VÁLVULAS EXPANSIÓN Y DE RETENCIÓN FUTURMAT

1

2

3

4

Photo	LF Code	Dimensions	Suitable for	For machine model
1	**1523701**	ø 3/8"M-3/8"M	FUTURMAT 08132600	PALANCA
2	**1523527**	---	FUTURMAT	---
3	**1523512**	ø 3/8"M-1/4"M	FUTURMAT	---
4	**1523526**	---	FUTURMAT 07843808	ARIETE - E61 - CUSTOM - F3 - RIMINI

VALVOLE DI ESPANSIONE E DI NON RITORNO GAGGIA
EXPANSION AND NON-RETURN VALVES GAGGIA
EXPANSIONS-UND RÜCKSCHLAGVENTILE GAGGIA
VÁLVULAS EXPANSIÓN Y DE RETENCIÓN GAGGIA

1

2

3

4

5

6

Photo	LF Code	Dimensions	Suitable for	For machine model
1	**1523068**	ø 1/8"M-1/8"M	GAGGIA WGA5001015000	GD - GE
2	**1523701**	ø 3/8"M-3/8"M	GAGGIA DM2197	D90 - E90
3	**1720002**	ø 1/4"M-1/4"M	GAGGIA DM1370	D90 - E90 - FD2000 - FE2000 - XD - XE
4	**1523432**	ø 1/8"M	GAGGIA WGA5001014000	GD - GE - LCD - XD - XE
5	**1720006**	ø 3/8"M-7 mm	GAGGIA 8008016000	GD ONE - GE ONE - TS
6	**1720005**	ø 1/4"F-7 mm	GAGGIA WGADM0262/003	DECO - FD2000 - FE2000 - GD COMPACT - GE COMPACT

VALVOLE DI ESPANSIONE E DI NON RITORNO GAGGIA
EXPANSION AND NON-RETURN VALVES GAGGIA
EXPANSIONS- UND RÜCKSCHLAGVENTILE GAGGIA
VÁLVULAS RETENCIÓN Y DE VÁLVULAS EXPANSIÓN GAGGIA

1

2

3

4

5

6

Photo	LF Code	Dimensions	Suitable for	For machine model
1	**1523514**	ø 1/4"F-1/4"M	GAGGIA 5024001000	LCD - XD - XE
2	**1720004**	ø 3/8"M-1/4"F	GAGGIA WGADM2198	DECO - GD COMPACT - GE COMPACT - TD - TE - TN94
3	**1523035**	ø 1/4"M-1/4"F	GAGGIA WGADM1232/001	D90 - E90 - GD - GE - TD - TE - TN94
4	**1515008**	ø 1/4"M-1/4"F	GAGGIA DM0262/001	D90 - E90
5	**1720003**	---	GAGGIA WGA8001072000	GD - GE
6	**1523052**	ø 1/8"M - 16 bar	GAGGIA 229452100	CAPPUCCINO XTWO - TITANIUM

VALVOLE DI ESPANSIONE E DI NON RITORNO GAGGIA SPAGNA
EXPANSION AND NON-RETURN VALVES GAGGIA SPAGNA
EXPANSIONS-UND RÜCKSCHLAGVENTILE GAGGIA SPAGNA
VÁLVULAS EXPANSIÓN Y DE RETENCIÓN GAGGIA SPAGNA

1

2

Photo	LF Code	Dimensions	Suitable for	For machine model
1	**1523701**	ø 3/8"M-3/8"M	GAGGIA SPAGNA 08132600	PALANCA
2	**1523526**	---	GAGGIA SPAGNA 07843808	BELLA - G6 - KB - NERA

VALVOLE DI ESPANSIONE E DI NON RITORNO ISOMAC
EXPANSION AND NON-RETURN VALVES ISOMAC
EXPANSIONS UND RÜCKSCHLAGVENTILE ISOMAC
VÁLVULAS RETENCIÓN Y DE EXPANSIÓN ISOMAC

1

Photo	LF Code	Dimensions	Suitable for	For machine model
1	**1720009**	ø 1/4"M - 8 mm	ISOMAC IS000263	MILLENNIUM - MONDIALE - TEA

VALVOLE DI ESPANSIONE E DI NON RITORNO ITALCREM
EXPANSION AND NON-RETURN VALVES ITALCREM
EXPANSIONS-UND RÜCKSCHLAGVENTILE ITALCREM
VÁLVULAS EXPANSIÓN Y DE RETENCIÓN ITALCREM

1

2

Photo	LF Code	Dimensions	Suitable for	For machine model
1	**1523701**	ø 3/8"M-3/8"M	ITALCREM 08132600	PALANCA
2	**1523526**	---	ITALCREM 07843808	CAPRI - IT4

VALVOLE DI ESPANSIONE E DI NON RITORNO LAVAZZA
EXPANSION AND NON-RETURN VALVES LAVAZZA
EXPANSIONS- UND RÜCKSCHLAGVENTILE LAVAZZA
VÁLVULAS EXPANSIÓN Y DE RETENCIÓN LAVAZZA

1

2

3

4

5

6

Photo	LF Code	Dimensions	Suitable for	For machine model
1	**1523035**	ø 1/4"M - 1/4"F	LAVAZZA 10062012	LB4800
2	**1523068**	ø 1/8"M - 1/8"M	LAVAZZA 10061926	LB4800
3	**1523432**	ø 1/8"M - 11 Bar	LAVAZZA 10061925	LB4800
4	**1515010**	ø 1/4"M - 1,6 Bar	LAVAZZA 10084130	LB4600
5	**1523403**	ø 1/4"M - 1/4"M - 3/8"M	LAVAZZA 10066228	LB4700 - LB4700R - LB4701R
6	**1720003**	---	LAVAZZA 10061980	LB4800

VALVOLE DI ESPANSIONE E DI NON RITORNO MAIRALI
EXPANSION AND NON-RETURN VALVES MAIRALI
EXPANSIONS-UND RÜCKSCHLAGVENTILE MAIRALI
VÁLVULAS EXPANSIÓN Y DE RETENCIÓN MAIRALI

1

2

Photo	LF Code	Dimensions	Suitable for	For machine model
1	**1523701**	ø 3/8"M-3/8"M	MAIRALI 08132600	PALANCA
2	**1523526**	---	MAIRALI 07843808	ARIANNE - GIULIETTA

VALVOLE DI ESPANSIONE E DI NON RITORNO MARCFI-ANCAS
EXPANSION AND NON-RETURN VALVES MARCFI-ANCAS
EXPANSIONS-UND RÜCKSCHLAGVENTILE MARCFI-ANCAS
VÁLVULAS EXPANSIÓN Y DE RETENCIÓN MARCFI-ANCAS

1

2

Photo	LF Code	Dimensions	Suitable for	For machine model
1	**1523422**	ø 3/8"M-3/8"M	MARCFI-ANCAS	---
2	**1523014**	ø 3/8"M-3/8"F	MARCFI-ANCAS	---

VALVOLE DI ESPANSIONE E DI NON RITORNO MARZOCCO
EXPANSION AND NON-RETURN VALVES MARZOCCO
EXPANSIONS-UND RÜCKSCHLAGVENTILE MARZOCCO
VÁLVULAS EXPANSIÓN Y DE RETENCIÓN MARZOCCO

1

2

Photo	LF Code	Dimensions	Suitable for	For machine model
1	**1523024**	ø 3/8"M-3/8"M	MARZOCCO L032/P	FB70 - FB80 - GB5 - LINEA - MISTRAL
2	**1523506**	ø 1/4"M	MARZOCCO L140C	FB70 - FB80 - GB5 - LINEA

VALVOLE DI ESPANSIONE E DI NON RITORNO MCE
EXPANSION AND NON-RETURN VALVES MCE
EXPANSIONS-UND RÜCKSCHLAGVENTILE MCE
VÁLVULAS EXPANSIÓN Y DE RETENCIÓN MCE

1

Photo	LF Code	Dimensions	Suitable for	For machine model
1	**1523403**	ø 1/4"M-1/4"M-3/8"M	MCE 20361	START

VALVOLE DI ESPANSIONE E DI NON RITORNO NUOVA SIMONELLI
EXPANSION AND NON-RETURN VALVES NUOVA SIMONELLI
EXPANSIONS-UND RÜCKSCHLAGVENTILE NUOVA SIMONELLI
VÁLVULAS EXPANSIÓN Y DE RETENCIÓN NUOVA SIMONELLI

1

2

3

4

5

6

Photo	LF Code	Dimensions	Suitable for	For machine model
1	**1523700**	ø 1/8"M-1/8"M	NUOVA SIMONELLI 73017002	ELLI
2	**1523007**	ø 1/4"M-1/4"M	NUOVA SIMONELLI 98003018	APPIA COMPACT - MAC2000 - PREMIER - PROGRAM
3	**1523405**	ø 1/4"M-1/4"M	NUOVA SIMONELLI 72012007	AURELIA - AURELIAII - BECH - MACDIGIT - MAC2000 - OPTIMA
4	**1523065**	ø 1/8"M-7 mm	NUOVA SIMONELLI 73012002	OSCAR
5	**5036751**	ø 1/8"M-8 mm	NUOVA SIMONELLI 98120001	APPIA - APPIA COMPACT - MUSICA - MUSICAS
6	**1523064**	---	NUOVA SIMONELLI 01000090	APPIA - AURELIA - AURELIAII - MUSICA - MUSICAS - OSCAR

VALVOLE DI ESPANSIONE E DI NON RITORNO ORCHESTRALE
EXPANSION AND NON-RETURN VALVES ORCHESTRALE
EXPANSIONS-UND RÜCKSCHLAGVENTILE ORCHESTRALE
VÁLVULAS EXPANSIÓN Y DE RETENCIÓN ORCHESTRALE

1

Photo	LF Code	Dimensions	Suitable for	For machine model
1	**1523403**	ø 1/4"M-1/4"M-3/8"M	ORCHESTRALE D20361	ETNICA - PHONICA

VALVOLE DI ESPANSIONE E DI NON RITORNO PAVONI
EXPANSION AND NON-RETURN VALVES PAVONI
EXPANSIONS-UND RÜCKSCHLAGVENTILE PAVONI
VÁLVULAS EXPANSIÓN Y DE RETENCIÓN PAVONI

1

2

3

Photo	LF Code	Dimensions	Suitable for	For machine model
1	**1523700**	ø 1/8"M-1/8"M	PAVONI 453200	---
2	**1523432**	ø 1/8"M	PAVONI 453201	---
3	**1523404**	---	PAVONI 395216	BAR - BART - PUB - HOTEL

VALVOLE DI ESPANSIONE E DI NON RITORNO PROMAC
EXPANSION AND NON-RETURN VALVES PROMAC
EXPANSIONS-UND RÜCKSCHLAGVENTILE PROMAC
VÁLVULAS EXPANSIÓN Y DE RETENCIÓN PROMAC

1

Photo	LF Code	Dimensions	Suitable for	For machine model
1	**1523009**	ø 3/8"M-1/4"M	PROMAC 10060460	COMPACT - GREEN

VALVOLE DI ESPANSIONE E DI NON RITORNO QUICK MILL
EXPANSION AND NON-RETURN VALVES QUICK MILL
EXPANSIÓNS UND RÜCKSCHLAGVENTILE QUICK MILL
VÁLVULAS DE RETENCIÓN Y DE EXPANSIÓN QUICK MILL

1

2

3

Photo	LF Code	Dimensions	Suitable for	For machine model
1	**1523700**	ø 1/8"M-1/8"M	QUICK MILL OT0995VNR	0980 ANDREJA - 0995P VETRANO
2	**1720009**	ø 1/4"M - 8 mm	QUICK MILL OT0980VAN	0980 ANDREJA
3	**1720018**	ø 1/4"M 10-14 bar	QUICK MILL OT0980VE	0980 ANDREJA

VALVOLE DI ESPANSIONE E DI NON RITORNO RANCILIO
EXPANSION AND NON-RETURN VALVES RANCILIO
EXPANSIONS-UND RÜCKSCHLAGVENTILE RANCILIO
VÁLVULAS EXPANSIÓN Y DE RETENCIÓN RANCILIO

1

2

Photo	LF Code	Dimensions	Suitable for	For machine model
1	**1523700**	ø 1/8"M-1/8"M	RANCILIO 10060505	S20
2	**1523009**	ø 3/8"M-1/4"M	RANCILIO 10060460	CLASSE10 - MILLENNIUM - S20 - Z11

VALVOLE DI ESPANSIONE E DI NON RITORNO RENEKA
EXPANSION AND NON-RETURN VALVES RENEKA
EXPANSIONS-UND RÜCKSCHLAGVENTILE RENEKA
VÁLVULAS EXPANSIÓN Y DE RETENCIÓN RENEKA

1

2

3

Photo	LF Code	Dimensions	Suitable for	For machine model
1	**1523700**	ø 1/8"M-1/8"M	RENEKA 9008339	CONCEPT - PLUS - PRESTIGE - VIVA - XL
2	**1523034**	ø 1/8"M-1/8"M	RENEKA 9008340	LC - VIVAE - VIVAS
3	**1523028**	ø 1/8"M-1/8"M	RENEKA 9008336	LC - XLPALLAS

VALVOLE DI ESPANSIONE E DI NON RITORNO ROYAL
EXPANSION AND NON-RETURN VALVES ROYAL
EXPANSIONS- UND RÜCKSCHLAGVENTILE ROYAL
VÁLVULAS EXPANSIÓN Y DE RETENCIÓN ROYAL

1

2

Photo	LF Code	Dimensions	Suitable for	For machine model
1	**1523561**	ø 1/4"M 10-14 bar	ROYAL 0510178	DIADEMA - DOGARESSA - SYNCHRO - TECNICA
2	**1720011**	ø 7/12 mm - H 20 mm	ROYAL 0510166	DIADEMA - DOGARESSA - SYNCHRO - TECNICA

VALVOLE DI ESPANSIONE E DI NON RITORNO SAECO
EXPANSION AND NON-RETURN VALVES SAECO
EXPANSIONS-UND RÜCKSCHLAGVENTILE SAECO
VÁLVULAS EXPANSIÓN Y DE RETENCIÓN SAECO

1

2

3

4

5

6

Photo	LF Code	Dimensions	Suitable for	For machine model
1	**1523068**	ø 1/8"M-1/8"M	SAECO WGA5001015000	AROMA
2	**1523432**	ø 1/8"M	SAECO WGA5001014000	AROMA
3	**1523035**	ø 1/4"M-1/4"F	SAECO WGADM1232/001	AROMA
3	**1720004**	ø 3/8"M-1/4"F	SAECO WGADM2198	AROMA
4	**1720005**	ø 1/4"F-7 mm	SAECO WGADM0262/003	AROMA
5	**1523052**	ø 1/8"M	SAECO 229452100	CAFECREMA - CAFENOVA - EASY - INCANTO - PRIMEA - ROYAL
6	**1720003**	---	SAECO WGA8001072000	AROMA

VALVOLE DI ESPANSIONE E DI NON RITORNO SAN MARCO
EXPANSION AND NON-RETURN VALVES SAN MARCO
EXPANSIONS-UND RÜCKSCHLAGVENTILE SAN MARCO
VÁLVULAS EXPANSIÓN Y DE RETENCIÓN SAN MARCO

1

2

Photo	LF Code	Dimensions	Suitable for	For machine model
1	**1523701**	ø 3/8"M-3/8"M	SAN MARCO 202201	LEVA - NEW 105 - 100 - 105 - 85 - 95
2	**1523424**	ø 1/8"M	SAN MARCO 400075	LEVA

VALVOLE DI ESPANSIONE E DI NON RITORNO SANREMO
EXPANSION AND NON-RETURN VALVES SANREMO
EXPANSIONS-UND RÜCKSCHLAGVENTILE SANREMO
VÁLVULAS EXPANSIÓN Y DE RETENCIÓN SANREMO

1

2

3

4

Photo	LF Code	Dimensions	Suitable for	For machine model
1	**1720012**	ø 1/4"M-1/8"M	SANREMO 10652020B	AMALFI - CAPRI - MILANO LX - PISA - VENEZIA
2	**1720015**	ø 1/8"F-1/8"F	SANREMO 10652033A	---
3	**1720013**	ø 1/8"M-7 mm	SANREMO 10655557A	AMALFI - CAPRI - MILANO LX - PISA - TREVISO - TREVISO LX
4	**1720014**	ø 1/8"F-1/8"F	SANREMO 10652027	TREVISO - TREVISOLX

VALVOLE DI ESPANSIONE E DI NON RITORNO SCALA
EXPANSION AND NON-RETURN VALVES SCALA
EXPANSIONS-UND RÜCKSCHLAGVENTILE SCALA
VÁLVULAS EXPANSIÓN Y DE RETENCIÓN SCALA

1

Photo	LF Code	Dimensions	Suitable for	For machine model
1	**1523561**	ø 1/4"M	SCALA C-0379	BUTTERFLY - CARMEN - EROICA - IRIS - NORMA

VALVOLE DI ESPANSIONE E DI NON RITORNO SPAZIALE
EXPANSION AND NON-RETURN VALVES SPAZIALE
EXPANSIONS-UND RÜCKSCHLAGVENTILE SPAZIALE
VÁLVULAS EXPANSIÓN Y DE RETENCIÓN SPAZIALE

1

2

Photo	LF Code	Dimensions	Suitable for	For machine model
1	**1523561**	ø 1/4"M	SPAZIALE 01626	NEW - PROFESSIONALE - RAPID - SELETRON PLUS - SPAZIO
2	**1523023**	ø 6.5/12 mm - H20.5 mm	SPAZIALE 00280	NEW - PROFESSIONALE - RAPID - SELETRON PLUS - SPAZIO

VALVOLE DI ESPANSIONE E DI NON RITORNO SPINEL
EXPANSION AND NON-RETURN VALVES SPINEL
EXPANSIONS-UND RÜCKSCHLAGVENTILE SPINEL
VÁLVULAS EXPANSIÓN Y DE RETENCIÓN SPINEL

1

2

Photo	LF Code	Dimensions	Suitable for	For machine model
1	**1720008**	ø 1/4"M-7 mm	SPINEL SR.000.098.003	DUELUX - DUETTOLUX - ESSELUX - MINIMINILUX - RONDOLUX
2	**1720009**	ø 1/4"M-8 mm	SPINEL SR.000.098.004	DUELUX - DUETTOLUX - ESSELUX - MINIMINILUX - RONDOLUX

VALVOLE DI ESPANSIONE E DI NON RITORNO VIBIEMME
EXPANSION AND NON-RETURN VALVES VIBIEMME
EXPANSIONS-UND RÜCKSCHLAGVENTILE VIBIEMME
VÁLVULAS EXPANSIÓN Y DE RETENCIÓN VIBIEMME

1

2

3

4

Photo	LF Code	Dimensions	Suitable for	For machine model
1	**1720010**	ø 1/4"M	VIBIEMME ASSVALVESPEVO	CHIMAERA - EVOLUTION - LOLLO - REPLICA - REVOLUTION
2	**1523028**	ø 1/8"M-1/8"M	VIBIEMME VALVNORITDOM	DOMOBARJUNIOR - DOMOBARSUPER
3	**1523023**	ø 6.5/12 mm - H20.5 mm	VIBIEMME ASSVALVNONRIT	CUBO - DOSAPLUS - KOMETA - MERCURY - MINIMAX - REPLICA
4	**1720011**	ø 7/12 mm - H20 mm	VIBIEMME VALVNONRITEVOL	CHIMAERA - EVOLUTION - LOLLO - REPLICA - REVOLUTION

VALVOLE DI ESPANSIONE E DI NON RITORNO VICTORIA ARDUINO
EXPANSION AND NON-RETURN VALVES VICTORIA ARDUINO
EXPANSIONS-UND RÜCKSCHLAGVENTILE VICTORIA ARDUINO
VÁLVULAS EXPANSIÓN Y DE RETENCIÓN VICTORIA ARDUINO

1

2

3

4

5

6

Photo	LF Code	Dimensions	Suitable for	For machine model
1	**1523007**	ø 1/4"M-1/4"M	VICTORIA ARDUINO 98003018	ATHENA - ATHENA LEVA
2	**1523405**	ø 1/4"M-1/4"M	VICTORIA ARDUINO 72012007	ADONIS
3	**1523065**	ø 1/8"M-7 mm	VICTORIA ARDUINO 73012002	VENUSBAR - VENUSCENTURY
4	**5072799**	ø 1/8"F-1/8"F	VICTORIA ARDUINO 98110001	VA388 BLACK EAGLE
5	**1523404**	---	VICTORIA ARDUINO 17000052	ATHENA LEVA
6	**1523064**	---	VICTORIA ARDUINO 01000090	ADONIS - VENUSCENTURY

VALVOLE DI ESPANSIONE E DI NON RITORNO VISACREM
EXPANSION AND NON-RETURN VALVES VISACREM
EXPANSIONS-UND RÜCKSCHLAGVENTILE VISACREM
VÁLVULAS EXPANSIÓN Y DE RETENCIÓN VISACREM

1

2

Photo	LF Code	Dimensions	Suitable for	For machine model
1	**1523701**	ø 3/8"M-3/8"M	VISACREM 08132600	PALANCA
2	**1523526**	---	VISACREM 07843808	BRAVA - NERA - V6

VALVOLE DI ESPANSIONE E DI NON RITORNO WEGA
EXPANSION AND NON-RETURN VALVES WEGA
EXPANSIONS-UND RÜCKSCHLAGVENTILE WEGA
VÁLVULAS EXPANSIÓN Y DE RETENCIÓN WEGA

1

2

3

4

5

Photo	LF Code	Dimensions	Suitable for	For machine model
1	**1523701**	ø 3/8"M-3/8"M	WEGA W10541	---
2	**1720019**	ø 1/4"M-3/8"M	WEGA WY56152	COMBI NOVA - JUNIOR
3	**1523410**	ø 1/8"M-1/8"M-1/8"M	WEGA WY56210	MININOVA
4	**1523403**	ø 1/4"M-1/4"M-3/8"M	WEGA WY20361	AIRY - ATLAS - ATLAS 10 - COLOSSEUM - CONCEPT - ESPRESSA
5	**1523404**	---	WEGA WY20353	LEVA

VALVOLE SFIATO
VENT VALVES
ENTLÜFTUNGSVENTILE
VÁLVULAS VACIADO

1

2

3

Photo	LF Code	Technical notes	Suitable for
1	**1523537**	ø 1/4"M VITON	ALL BRANDS - TUTTE LE MARCHE
2	**1523534**	ø 1/4"M PTFE AND VITON	ALL BRANDS - TUTTE LE MARCHE
3	**1523538**	ø 1/4"M	ALL BRANDS - TUTTE LE MARCHE

VALVOLE SFIATO DEDICATE
SPECIFIC VENT VALVES
ENTLÜFTUNGSVENTILE
VÁLVULAS VACIADO DEDICADAS

1

2

3

4

5

6

Photo	LF Code	Technical notes	Suitable for
1	**1523651**	ø 3/8"M BRASS-OTTONE	PROMAC - RANCILIO
2	**1515016**	ø 1/4"M BRASS-OTTONE	EXPOBAR
3	**1523004**	ø 1/4"M	BRASILIA
4	**1523047**	ø 1/4"M PLASTIC-PLASTICA	FRANKE
5	**1523051**	ø 3/8"M	PROMAC - RANCILIO
6	**1523073**	ø 1/4"M	CASADIO - CIMBALI - FAEMA

VALVOLE SICUREZZA CALDAIA
BOILER SAFETY VALVES
SICHEREITSVENTILE BOILER
VÁLVULAS SEGURIDAD CALDERA

1

2

Photo	LF Code	Technical notes	Suitable for
1	**1515100**	ø 3/8"M 1.8 bar CE-PED	ALL BRANDS - TUTTE LE MARCHE
1	**1515120**	ø 3/8"M 1.9 bar CE-PED	ALL BRANDS - TUTTE LE MARCHE
1	**5072121**	ø 3/8"M 2.5 bar CE-PED - CW510L	ALL BRANDS - TUTTE LE MARCHE
2	**1515110**	ø 1/2"M 1.8 bar CE-PED	ALL BRANDS - TUTTE LE MARCHE
2	**1523022**	ø 1/2"M 1.5 bar CE-PED	SPAZIALE

VALVOLE SICUREZZA CALDAIA
BOILER SAFETY VALVES
SICHEREITSVENTILE BOILER
VÁLVULAS SEGURIDAD CALDERA

1

2

3

4

5

6

Photo	LF Code	Technical notes	Suitable for
1	**1523543**	ø M18x1.5 1.8 bar	SAN MARCO OLD - VERSIONI VECCHIE
1	**1523545**	ø M19x1.5 1.8 bar	GAGGIA OLD - VERSIONI VECCHIE
1	**1523544**	ø M22x1.5 1.8 bar	PAVONI OLD - VERSIONI VECCHIE
2	**1515003**	ø 1/4"M 2.1 bar	NUOVA SIMONELLI - VICTORIA ARDUINO
3	**1523121**	ø 3/8"M 1.5 bar CE-PED	ELEKTRA
3	**1523029**	ø 3/8"M 1.6 bar CE-PED	EXPOBAR - PROMAC - RANCILIO
3	**1523059**	ø 3/8"M 1.8 bar CE-PED	ALL BRANDS - TUTTE LE MARCHE
3	**1515025**	ø 3/8"M 1.9 bar CE-PED	CARIMALI - RANCILIO
3	**1515007**	ø 3/8"M 2.0 bar CE-PED	CIMBALI - FAEMA
4	**1523574**	ø 3/8"M 1.1 bar CE-PED	---
4	**1523003**	ø 3/8"M 1.6 bar CE-PED	BRASILIA - FIAMMA - SAB ITALIA
4	**1523572**	ø 3/8"M 1.8 bar CE-PED	ALL BRANDS - TUTTE LE MARCHE
5	**1523571**	ø 1/4"M 1.8 bar CE-PED	---
5	**1515004**	ø 1/4"M 2.0 bar CE-PED	CASADIO - CIMBALI - FAEMA
5	**1515005**	ø 3/8"M 1.8 bar CE-PED	SANREMO
6	**1515006**	ø 3/8"M-1/2"M 1.8 bar CE-PED	BFC - ROYAL
6	**1515017**	ø 3/8"M-3/4"M 1.8 bar CE-PED	GAGGIA

VALVOLE SICUREZZA CALDAIA
BOILER SAFETY VALVES
SICHEREITSVENTILE BOILER
VÁLVULAS SEGURIDAD CALDERA

1

2

3

4

Photo	LF Code	Technical notes	Suitable for
1	**1523541**	ø 1/4"M 1.8 bar	CIMBALI
2	**1515002**	ø 3/8"M 2.0 bar CE-PED	GRIMAC - ECM - ECM MANUFACTURE
2	**1523054**	ø 3/8"M 1.8 bar CE-PED	PAVONI
3	**1523021**	ø 3/8"M 1.8 bar	SPAZIALE - VIBIEMME
4	**1515019**	ø 1/2"M 1.8 bar	VIBIEMME

VALVOLE SICUREZZA CALDAIA
BOILER SAFETY VALVES
SICHEREITSVENTILE BOILER
VÁLVULAS SEGURIDAD CALDERA

1

2

3

4

5

6

Photo	LF Code	Technical notes	Suitable for
1	**1523408**	ø 1/8"M	ASTORIA/CMA - LAVAZZA - WEGA
2	**1523409**	ø 3/8"M - 1.9 bar	ASTORIA/CMA - LAVAZZA - MCE - ORCHESTRALE - WEGA
3	**5029783**	ø 1/2"M - 1.5 bar	BEZZERA
4	**1515009**	ø 3/8"M	BIANCHI
5	**1523048**	ø 1/4"M - 2.0 bar	CIMBALI - FAEMA
6	**5036835**	ø 3/8"M	ELEKTRA
6	**1515026**	ø 3/8"M	ZACCONI

VALVOLE SICUREZZA CALDAIA
BOILER SAFETY VALVES
SICHEREITSVENTILE BOILER
VÁLVULAS SEGURIDAD CALDERA

1

2

3

4

5

6

Photo	LF Code	Technical notes	Suitable for
1	**1515021**	ø 3/8"M - 1.9 bar	FRACINO
2	**1515023**	ø 1/4"M	ISOMAC
3	**1523013**	---	PAVONI
4	**1523025**	M12	PAVONI
5	**1320008**	ø 1/2"M - 1.5 bar	RENEKA
6	**1515020**	ø 1/2"M	VIBIEMME

VALVOLE SICUREZZA CALDAIA
BOILER SAFETY VALVES
SICHEREITSVENTILE BOILER
VÁLVULAS SEGURIDAD CALDERA

1

2

3

Photo	LF Code	Technical notes	Suitable for
1	**1523402**	---	ASTORIA/CAM - LAVAZZA - MCE - ORCHESTRALE - WEGA
2	**1523002**	---	ASTORIA/CAM - LAVAZZA - MCE - ORCHESTRALE - WEGA
3	**3523090**	---	CONTI

VALVOLE SFIATO DEDICATE
SPECIFIC VENT VALVES
STANDENTLÜFTUNGSVENTILE
VÁLVULAS VACIADO DEDICADAS

1

2

Photo	LF Code	Technical notes	Suitable for
1	**1515027**	M8	BIALETTI MOKA
2	**1515028**	M9	BIALETTI MUKKA

Digital catalogues, an exclusive service **always available** for you

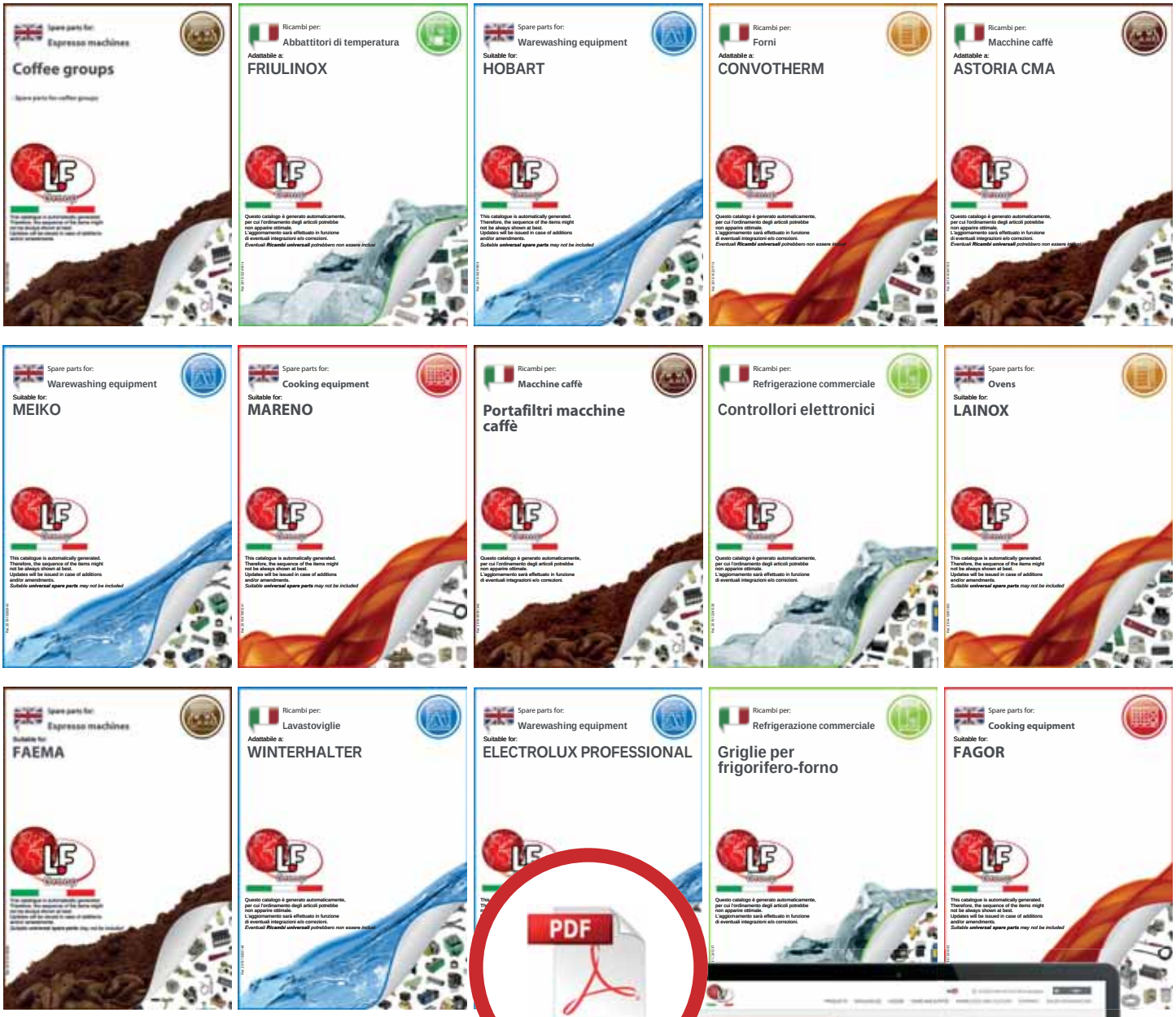

- **Search** by brand, manufacturer or product family
- Always updated & **interactive**
- From part number in catalogue directly to **webshop**

- **Digital catalogues for each brand-manufacturer**
- **Digital catalogues for each product family**

www.lfspareparts724.com

25122017_4L_5000_A4_80-250_G
LF1CAF5

Distributing Components, Spare Parts & Accessories
in original quality worldwide

LF SpA HEADQUARTERS
via Voltri, 80 - 47522 Cesena (FC) ITALY
Tel. +39 0547 34 11 11 - Fax +39 0547 34 11 10
www.lfricambi724.it - info@lfricambi.it
Export Dept. Tel. +39 0547 34 11 50 - Fax +39 0547 34 11 55
www.lfspareparts724.com - export@lfspareparts.com

LF SpA HOUSEHOLD COMPONENTS DIVISION
Via Padriciano, 99 - AREA Science Park - 34149 Trieste (TS) ITALY
Tel. +39 0547 34 12 42 - Fax +39 0547 34 12 48
www.lfspareparts724.com - info@lfspareparts.com

EPGC Sas FRANCE
13, Rue des Forts - 59960 Neuville en Ferrain
Tel. +33 (0)3 20 25 06 21 - Fax +33 (0)3 20 25 34 12
www.epgc.com - epgc@epgc.com

LF GmbH GERMANY
Junkersstrasse, 3 - D-82178 Puchheim - München
Tel. +49 89 89 45 78 66 - Fax +49 89 89 45 78 88
www.lfersatzteile724.de - info@lfersatzteile.de

OOO LF RUSSIAN FEDERATION
Ul. Anatoliya Zhivova, 8 - office 1 - 123100 Moscow
Tel./Fax +7 495 725 26 53
www.lfspareparts724.ru - info@lfspareparts.ru

LF Repuestos Horeca S.L.U. SPAIN
Polígono Industrial Carpetania - C/Miguel Faraday, 8 - 28906 Getafe
Tel. +34 91 477 91 00 - Fax +34 91 477 90 81
www.lfrepuestos-horeca724.es - info@lfrepuestos.es

LF Scandinavia Aps - LF Spareparts S.p.A. DENMARK
Nupark, 51 - 7500 Holstebro
Tel. +45 70 70 77 33
www.lfspareparts724.dk - denmark@lfspareparts.dk

LF SpA Cesena (IT) Swiss Branch Steinhausen SWITZERLAND
Sennweidstrasse, 45 - CH-6312 Steinhausen
Tel. +41 (0)41 760 15 80/1 - Fax +41 (0)41 760 15 85
www.lfersatzteile724.ch - info@lfersatzteile.ch

LF Spare Parts Ltd. UNITED KINGDOM
A10a Lakeside Business Park, Broadway Lane
South Cerney, Gloucestershire GL7 5XL
Tel. +44 (0)1285 86 16 25 - Fax +44 (0)1285 86 39 49
www.lfspareparts724.co.uk - info@lfspareparts.co.uk

LF Central Est Europe S.r.o. CZECH REPUBLIC
Antala Staska 1859/34
14000 Praha 4 - KRC
Tel. +420 234 129 707
www.lfspareparts724.cz - info@lfspareparts.cz

LF SPARE PARTS INC. USA
Legal address:
155 Office Plaza Dr - Suite A - Tallahassee, FL 32301
Business/Mailing address:
1100 South Tower, 225 Peachtree St., N.E. - Atlanta, GA 30303, USA
Tel. +1-404-525-2600 - Fax +1-404-586-3528
www.lfspareparts724.us - info@lfspareparts.us
Tel. West Coast and Midwest: 206-349-1525 Sauro
Tel. East Coast and the Caribbean: 786-817-1764 Luis

AUSTRALIA AND NEW ZEALAND
www.lfspareparts724.com
andrea.calvio@lfspareparts.com

AUSTRIA
www.lfersatzteile724.at
info@lfersatzteile.at

BALKAN COUNTRIES
www.lfspareparts724.com
matija.ramov@lfspareparts.com

BALTIC COUNTRIES
www.lfspareparts724.com
inara.silina@lfspareparts.com

LATIN AMERICA AND THE CARRIBEANS
www.lfrepuestos-horeca724.es
export@lfrepuestos.es

POLAND
www.lfspareparts724.pl
info@lfspareparts.pl

SOUTH KOREA
www.lfspareparts724.com
fabio.doni@lfspareparts.com

TURKEY
www.lfyedekparca724.com
export@lfspareparts.com