DRAWING NO	

WEIGUANG® Axial fan motor

Wiring diagrams:

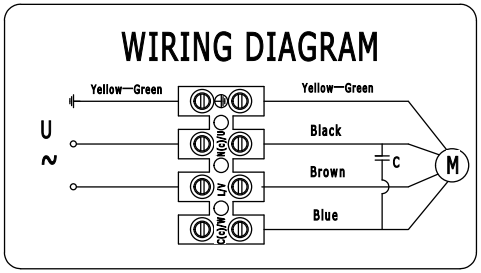

sucking

Direction of airflow"S"

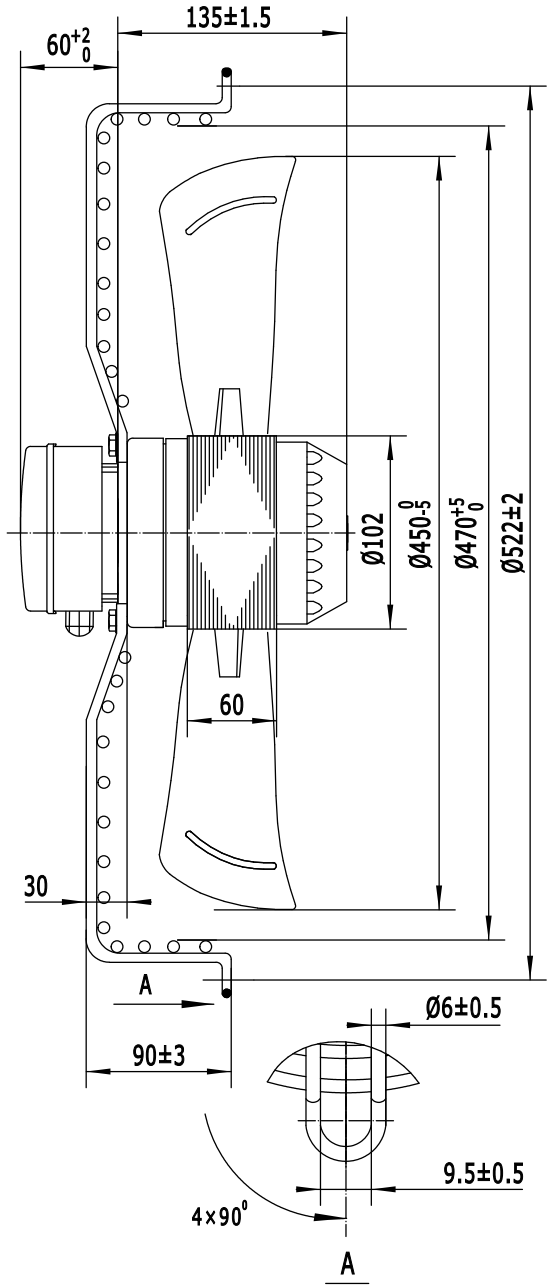

LABEL:

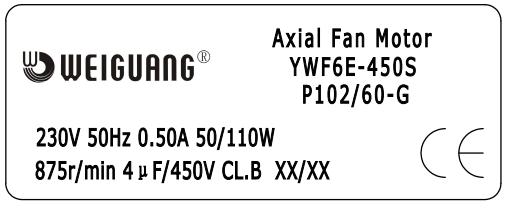

ErP2015 LABEL:

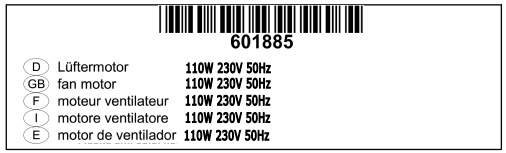

HANGZHOU WEIGUANG ELECTRONIC CO.,LTD

Unit: axial fan motor	Type:
Motor: single phase motor with capacitor	Customer:
Motor type:YWF6E-450S-P102/60-G	Customer-type:

TYPE	Voltage v	Frequency Hz	Input power W	Current A	Speed r/min +/-5%	Air volume m^3/h	noise level dBA	capacitor μF/ VDB
YWF6E-450S-P102/60-G	230	50	110	0.50	875	/	61	6μF/450V

Insulation class : B	Operating type: S_1
Permissible ambient temperature : -30～60℃	Temperature increase: ΔT≤75k
Motor protection:thermocontact 135±5℃	Bearings: ball bearings
	License: CE CCC

Model meanings:

YWF 6E-450 S-P102/60-G

- YWF: Asynchronism axial fan motor
- 6E: Motor pole
- 450: Fans diameter
- S: Three Phases
- P: Direction of airflow
- 102: ErP2015
- 60: The diameter of the rotor
- G: The thickness of laminated core
- Grid

Electrical connection:lead wire Silikon 4G 0.50mm², Length 100mm in terminal box connected

Direction: clockwise(sucking), looking into the end-sheild

APPROX.WEIGHT	
MEANS	

REV.	DESCRIPTION	APPROVED	DATE				SIGN	DATE
						DRN.BY		
						CHD.BY		
						ENG.BY		
						APP.BY		

TITLE

YWF6E-450S-P102/60-G

PROJECTION

A4

SCALE

SHEET: of