IDNext -HC

Electronic controllers compatible with flammable refrigerant gases

User Manual

01/20

IDNXP-00EN

www.eliwell.com

by Schneider Electric

The information given in this document contains general descriptions and/or technical characteristics concerning the performance of the products found in it. This document is not intended to replace these products nor must it be used to determine their suitability and reliability for any users' specific applications. Each user or integrator is responsible for performing the risk analysis, evaluation and appropriate and complete testing of the products according to the specific application or use in question.

Neither Schneider Electric, nor its sister companies nor subsidiaries shall be legally or financially liable for any potentially incorrect use of the information contained in this documentation. If you have any suggestions for improvement or modification, or find any errors in this publication, please contact us.

The user hereby accepts not to reproduce, other than for his/her own personal, non-commercial use, all or part of this document in any form without the written permission of Schneider Electric or Eliwell. The user also agrees to not create any hypertext links to this document or its content. Schneider Electric and Eliwell shall not grant any rights or license for personal and non-commercial use of the document and its content, with the exception of a non-exclusive license to consult it "as-is", at your own risk. All other rights are reserved.

The installation and use of this product must comply with all applicable state, regional and local safety regulations. For safety reasons and to ensure greater compliance with the data of the documented system, component repairs must be performed exclusively by the manufacturer.

When using devices for applications with technical safety requirements, comply with the relevant instructions. Failure to use Eliwell software or other approved software with our hardware products can result in injury, damage or incorrect operating results.

Failure to comply with this information can result in injury or damage to the equipment.

© 2020 Eliwell. All rights reserved.

Indice

Safety information **5**

Information about... ..... **7**

Introduction **11**

Introduction 12

Models 13

Accessories 14

Preliminary configurations **15**

Introduction 16

IDNext 902 P (12 Vac/dc - 230 Vac) 18

IDNext 961 P (12 Vac/dc - 230 Vac) 19

IDNext 971 P/B (12 Vac/dc - 230 Vac) 20

IDNext 974 P/B (12 Vac/dc - 230 Vac) 21

IDNext 974 P/C (230 Vac) 22

IDNext 974 P/CI (230 Vac) 23

IDNext 978 P/B (230 Vac) 24

IDNext 978 P/C (230 Vac) 25

IDNext 978 P/CI (230 Vac) 26

Mechanical installation **27**

Before starting 28

Power supply disconnection 28

Operating environment 29

Comments concerning installation 30

Installation 31

Electrical connections **32**

Best wiring practices 33

Connections 35

IDNext 902 P (12 Vac/dc - 230 Vac) 36

IDNext 961 P (12 Vac/dc - 230 Vac) 37

IDNext 971 P/B (12 Vac/dc - 230 Vac) 38

IDNext 974 P/B (12 Vac/dc - 230 Vac) 39

IDNext 974 P/C (230 Vac) 40

IDNext 974 P/CI (230 Vac) 40

IDNext 978 P/B (230 Vac) 41

IDNext 978 P/C (230 Vac) 41

IDNext 978 P/CI (230 Vac) 42

Technical characteristics **43**

Technical data 44

Power supply and consumption 44

Output characteristics 45

Input characteristics 46

Further Information 46

User interface and operation **47**

User interface 48

Using the controller 50

Setting the probes 52

Setting the displayed values 53
Defrost 54
Introduction 55
Display and alarm operation 56
Manual defrost 57
Defrost Modulating 59
Standard defrost 68
Dual evaporator defrost 75
Tools 77
Door switch 78
Stand-by 79
Copy parameters (UNICARD) 80
Regulators 81
Heat/Cool 82
Compressor 83
Managing the compressor with the probe in error 86
Variable-speed compressor 87
Activating the Auto-tuning function for the PID regulator 89
Dual compressor 90
Deep cooling cycle (DCC) 91
Evaporator Fans 92
Condenser Fans 95
Pressure switch 98
Auxiliary Output 100
Light output 101
Deadband 102
Night/Day 103
Energy Saving - Reduced Set 105
Diagnostics 107
Alarms and indications 108
Minimum and maximum temperature alarm 110
Parameters IDNext -HC 112
Parameters IDNext 902 P 113
Parameters IDNext 961 P 118
Parameters IDNext 971 P/B 123
Parameters IDNext 974 P/B 130
Parameters IDNext 974 P/C 137
Parameters IDNext 974 P/CI 146
Parameters IDNext 978 P/B 155
Parameters IDNext 978 P/C 162
Parameters IDNext 978 P/CI 170
Modbus MSK 750 functions and resources 180
Setting parameters via Modbus 181
Modbus table content 182
Table of Modbus Parameters 184
Visibility table for folders relating to applications 203
Table of Modbus Resources 205

Safety information

Important information

Read these instructions carefully and visually inspect the equipment to familiarize yourself with the controller before attempting to install it and/or put it into operation, or before servicing it. The following warning messages may appear anywhere in this documentation or on the equipment to warn of potential dangers or to call attention to information that can clarify or simplify a procedure.

The addition of this symbol to a danger warning label indicates the existence of an electrical hazard that could result in personal injury should the user fail to follow the instructions.

This is the safety warning symbol. It is used to warn the user of the potential dangers of personal injury. Observe all the safety warnings that follow this symbol to avoid the risk of serious injury or death.

⚠ DANGER

DANGER indicates a dangerous situation which, if not avoided, **will result in** death or serious injury.

⚠ WARNING

WARNING indicates a dangerous situation which, if not avoided, **could result in** death or serious injury.

⚠ CAUTION

CAUTION indicates a potentially dangerous situation which, if not avoided, **could result in** minor or moderate injury.

NOTICE

NOTICE used in reference to procedures not associated with physical injuries.

Note

Electrical equipment must only be installed, used and repaired by qualified technicians. Schneider Electric and Eliwell do not accept any liability for any consequences arising from the use of this material.

An authorized person is someone in possession of the skills and knowledge applicable to the structure, to the operation of the electrical equipment and to its installation, and who has received safety training in order to recognize and avoid the risks involved.

Personnel qualification

Only personnel with suitable training and an in-depth knowledge and understanding of the contents of this manual and any other documentation relevant to the product are authorized to work on and with this product. Qualified personnel must be capable of identifying any dangers which may arise from the parameterization or changing of parameter values, and from the use of mechanical, electric and electronic equipment in general.

Plus, they must be familiar with the personal safety laws, provisions and regulations which must be observed during system planning and implementation.

Permitted use

This product is used to control refrigerated cabinets, display units and refrigerated units.

The controller must be installed and used in accordance with the provided instructions and in particular, in normal conditions, dangerous energized parts must not be accessible.

The controller should be suitably protected from water and dust. Access to the various product parts from the front should involve the use of a keyed or tooled locking mechanism.

The controller is suited for being integrated in equipment for domestic and commercial use and/or similar for refrigeration and/or heating purposes and has been checked on the basis of the harmonized European standards of reference.

Only use the product with the specified cables and accessories. Only use genuine accessories and spare parts.

Prohibited use

Any use other than that indicated in the above paragraph "Permitted use" is strictly prohibited.

The relay contacts supplied are electromechanical and are subject to wear. The functional safety protection devices, specified by international or local laws, must be installed outside this device.

Liability and residual risks

The liability of Schneider Electric and Eliwell is limited to the correct and professional use of the product according to the directives referred to herein and in the other supporting documents, and does not cover any damage (including but not limited to) the following causes:

- unspecified installation/use and, in particular, in contravention of the safety requirements of the legislation in force in the country of installation and/or specified in this document;
- use on equipment which does not provide adequate protection against electrocution, water and dust in the actual installation conditions;
- use on devices which allow access to dangerous parts without the aid of tools and/or which do not have a keyed locking mechanism;
- product tampering and/or alteration;
- installation/use on equipment that does not comply with the regulations in force in the country of installation.

Disposal

The equipment (or product) must be subjected to separate waste collection in compliance with local legislation regarding waste disposal.

Information about...

Aim of the document

This document describes the **IDNext -HC** controllers and corresponding accessories, including information regarding installation and wiring.

Note: read this document and all related documents carefully before installing, operating or servicing the controller.

Note regarding validity

The technical characteristics of the devices described in this manual are also available online, through the Eliwell website (**www.eliwell.com**).

The characteristics illustrated in this manual should be identical to those which can be found online. In accordance with our policy of continuous improvement, the content of the documentation may be revised from time to time in order to improve its clarity and accuracy. If there are any discrepancies between the manual and the information available online, use the latter as your point of reference.

Related documents

Publication title	Reference document code
Technical Sheet IDNext -HC	9IS54728 (16L)

All available technical documentation and other technical information is available to download from the website: **www.eliwell.com**

Product related information

⚠ ⚠ DANGER

RISK OF ELECTRIC SHOCK, EXPLOSION, FIRE OR ARC FLASH

- Disconnect all power from all equipment including connected devices prior to removing any covers or doors, or installing or removing any accessories, hardware, cables or wires.
- Always use a properly rated voltage sensing device to confirm the power is off where and when indicated.
- Before restoring the power supply, replace and secure all covers, hardware components and cables.
- Use only the specified voltage when operating this device and any associated products.
- Use appropriate safety interlocks where personnel and/or equipment hazards exist.
- Install and use this equipment in an enclosure appropriately rated for its intended environment.
- Do not use this equipment for safety-critical functions.
- Do not disassemble, repair, or modify this equipment.

Failure to follow these instructions will result in death or serious injury.

⚠ ⚠ DANGER

RISK OF ELECTRIC SHOCK AND/OR FIRE

- Do not expose the equipment to liquids.
- Do not exceed the temperature and humidity ranges specified in the technical data and keep the area surrounding the cooling slits aerated.
- Do not apply dangerous voltages to the SELV connection terminals (see "Connections" chapter).
- Only connect compatible accessories - as specified in the section "Accessories" - to the device.
- Only use cables with a suitable cross-section as indicated in the section "Wiring guidelines".

Failure to follow these instructions will result in death or serious injury.

⚠ ⚠ DANGER

LOOSE WIRING CAN RESULT IN ELECTRIC SHOCK AND/OR FIRE

Tighten the connections in compliance with the technical specifications for torque values and make sure the wiring is correct.

Failure to follow these instructions will result in death or serious injury.

⚠ WARNING

RISK OF OVERHEATING AND/OR FIRE

- Do not use with loads other than those indicated in the technical data.
- Do not exceed the maximum permitted current; in the case of higher loads, use a contactor with suitable power.
- Power lines and output connections must be suitably wired and protected by means of fuses when required by national and local regulations.
- Connect the relay output (Out1...Out4), including the shared hub, using cables with a cross-section of 2.5 mm^2 (14 AWG) and a length of at least 200 mm (7.87 in.).

Failure to follow these instructions can result in death, serious injury, or equipment damage.

When handling the equipment, take care to avoid damage caused by electrostatic discharge. In particular, the unshielded connectors are extremely vulnerable to electrostatic discharge.

⚠ WARNING

UNINTENDED EQUIPMENT OPERATION DUE TO ELECTROSTATIC DISCHARGE

Before handling the equipment, always discharge the static electricity from the body by touching an earthed surface or type-approved antistatic mat.

Failure to follow these instructions can result in death, serious injury, or equipment damage.

NOTICE

UNINTENDED EQUIPMENT OPERATION

The SELV wiring must be laid separately from all the other wiring (see "Connections" chapter).

Failure to follow these instructions can result in equipment damage.

The temperature (NTC/PTC/Pt1000) probes have no specified connection polarity; the connections can be extended using a normal bipolar cable. Extending the probe wiring influences the electromagnetic compatibility (EMC) of the controller.

NOTICE

INOPERABLE DEVICE

- For connection of the probes, the digital input and the Open Collector output, use cables no longer than 10 m (32.80 ft).
- For TTL serial line connection, use cables no longer than 1 m (3.28 ft).
- For all instruments powered at 12 Vac/dc, use power cables no longer than 3 m (9.84 ft)

Failure to follow these instructions can result in equipment damage.

The procedure for loading one of the preset applications restores the original factory values, i.e. the default values shown in the parameters table, except for the parameters that are not present within the preset applications **AP1**, **AP2** and **AP3** which retain the value set previously. These values, left unaltered, may not be suitable and may therefore need to be changed.

NOTICE

INOPERABLE DEVICE

Check the parameters after loading a preset application.

Failure to follow these instructions can result in equipment damage.

Flammable refrigerant gases

The use of flammable refrigerant gases depends on many factors, including current local, regional and/or national standards.

The devices and relative accessories described in the documentation supplied with the product use components and - to be more specific - electromechanical relays tested in accordance with standard IEC 60079-15 and classified as nC components (non-sparking electrical devices with protection 'n').

Conformity with standard IEC 60079-15 is considered sufficient - and therefore suitable - for commercial refrigeration and HVAC systems using flammable refrigerant gases such as R290. Nevertheless, there may be other limitations, devices, locations and/or machine types (refrigerators, automatic distributors and dispensers, bottle coolers, ice machines, chiller cabinets for self-service facilities, etc.) involved, leading to the application of further restrictions and/or obligations.

The use and application of the information contained in this document requires experience in the design and parameterization/programming of control systems for refrigeration and HVAC systems. Only you, i.e. the original equipment producers, installers or users, can be aware of the conditions and factors present, in addition to the applicable regulations during the planning, installation and setup, operation and maintenance of the machine, or the related processes. Therefore, only you can decide on the suitability of the automation and the associated equipment, and the resulting safety measures and interlock devices that can be applied effectively and adequately in the locations in which the relevant equipment is to be commissioned. When choosing the automation and control equipment - and any other related equipment or software - for a particular application, you must also take account of all the standards set out by applicable national legislation or by the relevant certifying authorities.

When using flammable refrigerant gases, at the end of the installation process for this controller and related equipment you must make sure the machine conforms to current standards and regulations. Although all the declarations and information contained herein are to be considered accurate and reliable, they are not covered by warranty. The information provided herein does not absolve the user from responsibility in terms of performing their own tests and certifications of conformity to all applicable regulations.

⚠ WARNING

REGULATORY INCOMPATIBILITY

Make sure that all equipment used and systems designed comply with all applicable local, regional and national laws.

Failure to follow these instructions can result in death, serious injury, or equipment damage.

Introduction

Contents

This section includes the following topics:

Introduction 12
Models 13
Accessories 14

Introduction

General Description

IDNext -HC is a family of electronic controllers for managing refrigerated cabinets, display units and refrigerated units.

Every controller has 3 preset applications: **AP1**, **AP2** and **AP3**, that pre-configure the controller to work with 3 real usage situations, reducing installation time and only requiring precision changes to parameters.

Main regulators

The main regulators for the controller are as follows:

- heat/cool
- compressor
- deep cooling cycle
- dual compressor
- variable-speed compressor
- evaporator/condenser fans
- defrost Modulating
- standard defrost
- dual evaporator defrost
- door switch
- AUX output (Auxiliary/Light)
- pressure switch
- day/night
- energy saving
- deadband

In this manual, the photographs and diagrams are provided to illustrate the controller (and other Eliwell devices) and are purely illustrative. The corresponding dimensions and proportions may not correspond to actual dimensions in terms of life-size or scale. Furthermore, all the wiring or electrical diagrams should be considered as simplified representations which may not exactly correspond to the reality.

Models

The following is a list of **IDNext -HC** models:

Product	Description
IDNext 902 P	IDNext 902 P NTC 10A 12Vac/dc AIR -HC
	IDNext 902 P NTC 10A 230Vac AIR -HC
IDNext 961 P	IDNext 961 P NTC 2Hp 12Vac/dc AIR -HC
	IDNext 961 P NTC 2Hp 230Vac AIR -HC
IDNext 971 P/B	IDNext 971 P NTC 2Hp/8 12Vac/dc BUZ AIR -HC
	IDNext 971 P NTC 2Hp/8 230Vac BUZ AIR -HC
IDNext 974 P/B	IDNext 974 P NTC 2Hp/8/5 12Vac/dc BUZ AIR -HC
	IDNext 974 P NTC 2Hp/8/5 230Vac BUZ AIR -HC
IDNext 978 P/B	IDNext 978 P NTC 1.5Hp/8/5/5 230Vac BUZ AIR -HC
IDNext 974 P/C	IDNext 974 P NTC 2Hp/8/5 230Vac RTC AIR -HC
IDNext 978 P/C	IDNext 978 P NTC 1.5Hp/8/5/5 230Vac RTC AIR -HC
IDNext 974 P/CI	IDNext 974 P NTC VSC/1.5Hp/8 230Vac RTC AIR -HC
IDNext 978 P/CI	IDNext 978 P NTC VSC/1.5Hp/8/5 230Vac RTC AIR -HC

Abbreviations

The following is a list of abbreviations used in the descriptions:

- **AIR** = the controller is compatible with the BTLE Dongle
- **BUZ** = the controller has a Buzzer
- **RTC** = the controller has the RTC
- **VSC** = the controller has an Open Collector output for connecting a variable-speed compressor

Accessories

⚠ ⚠ DANGER

RISK OF ELECTRIC SHOCK, FIRE OR ARC FLASH

Only connect compatible accessories to the instrument.

Failure to follow these instructions will result in death or serious injury.

Contact an Eliwell representative for further information regarding the accessories that can be used.

Accessory	Description
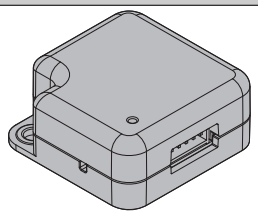	**BTLE Dongle**: TTL/Bluetooth communication interface
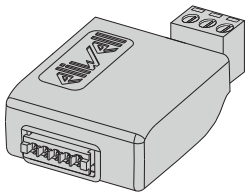	**BusAdapter 150 Dongle**: Non-opto-isolated TTL/RS485 communication interface
	BusAdapter: Opto-isolated TTL/RS485 communication interface
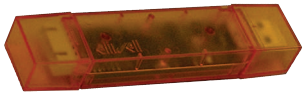	**UNICARD**: Programming key
	DMI: Programming interface
	Probes: NTC, PTC, Pt1000
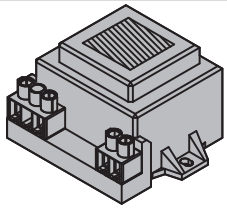	**Transformers**: 230 V / 12 V power supply transformers (for models with 12 Vac/dc power supply)
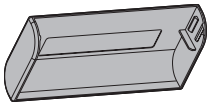	**Protection**: Dripping protection for connections

Preliminary configurations

Contents

This section includes the following topics:

Introduction 16
IDNext 902 P (12 Vac/dc - 230 Vac) 18
IDNext 961 P (12 Vac/dc - 230 Vac) 19
IDNext 971 P/B (12 Vac/dc - 230 Vac) 20
IDNext 974 P/B (12 Vac/dc - 230 Vac) 21
IDNext 974 P/C (230 Vac) 22
IDNext 974 P/CI (230 Vac) 23
IDNext 978 P/B (230 Vac) 24
IDNext 978 P/C (230 Vac) 25
IDNext 978 P/CI (230 Vac) 26

Introduction

Overview

IDNext -HC is a family of electronic controllers for managing refrigerated cabinets, display units and refrigerated units.

Every controller has 3 preset applications: **AP1**, **AP2** and **AP3**, that pre-configure the controller to work with 3 real usage situations, reducing installation time and only requiring precision changes to parameters.

Applications

Changing the controller operating parameters does not affect the preset application values.

The first time the instrument is switched on, the operating parameters are the same (for value and visibility) as those for application **AP1**.

Applications **AP1**, **AP2** and **AP3** cannot be edited from the instrument.

Applications **AP2** and **AP3** can only be edited via Device Manager, an Eliwell proprietary software.

Application **AP1** can never be edited (not even using Device Manager) so that the controller can be restored with a reliably working application.

Switching on for the first time

Once the electrical connections have been completed, simply power up the device for it to start working.

At the first startup:

1. Select and load the preset application - **AP1**, **AP2** or **AP3** - that best reflects the usage requirements.
2. Check and, if necessary, adjust the value of the main controller parameters to adapt the selected application to your system.
3. Make sure there are no active alarms.

Loading Preset Applications

The procedure for loading one of the preset applications is:

1. Switch on the controller
2. Press and hold ∇ for at least 3 seconds, until the keypad unlock label “UnL” appears
3. Within 30 seconds of switching the controller on, press and hold **SET** + ∇ for at least 5 seconds, until the label “AP1” appears
4. Scroll through applications **AP1**, **AP2** and **AP3** using ∆ and ∇
5. Confirm the selected preset application using **SET**.
   Note: The process can be canceled by pressing ⏻ or letting a timeout occur (15 seconds)
6. If the procedure was completed successfully, the display will show "**yES**"; otherwise it will show "**no**"
7. The regulator will restart and revert to showing the main display

The procedure for loading one of the preset applications restores the respective default values, with the exception of the parameters NON specific to the application that retain the value set previously. These values, left unaltered, may not be suitable and may therefore need to be changed.

NOTICE
INOPERABLE DEVICE Check the parameters after loading a preset application. **Failure to follow these instructions can result in equipment damage.**

Restore default values

When necessary, you can restore the parameters to their default values, by loading one of the preset applications **AP1**, **AP2** or **AP3**.

View Preset applications

Click on the controller model purchased to access the corresponding Preset applications:

- **IDNext 902 P**
- **IDNext 961 P**
- **IDNext 971 P/B**
- **IDNext 974 P/B**
- **IDNext 974 P/C**
- **IDNext 974 P/CI**
- **IDNext 978 P/B**
- **IDNext 978 P/C**
- **IDNext 978 P/CI**

IDNext 902 P (12 Vac/dc - 230 Vac)

Application overview

AP1: AT static refrigerated units

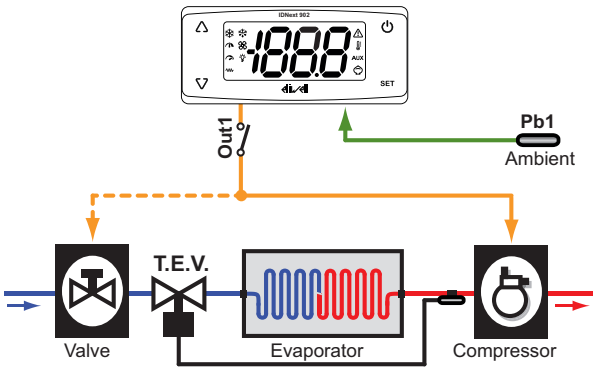

AP2: NT static refrigerated units

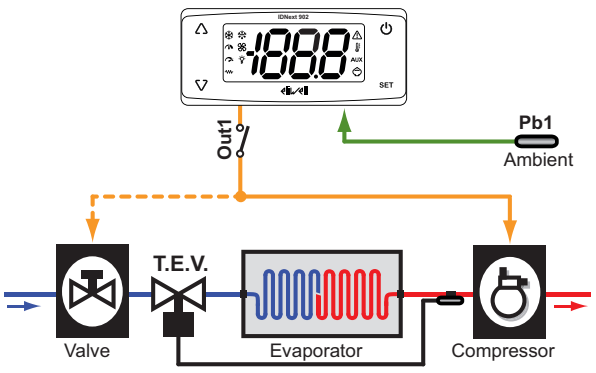

AP3: heat application

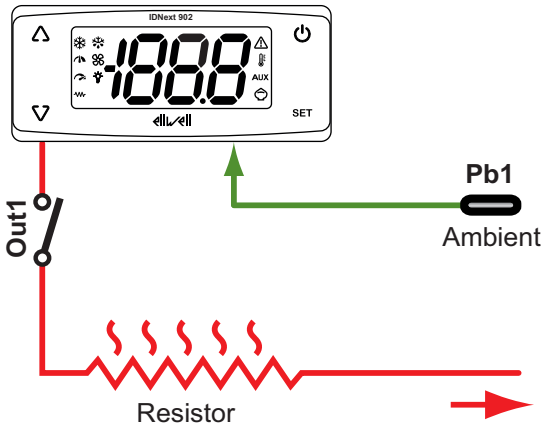

Legend:

- **Ambient** = Ambient
- **Valve** = Valve
- **T.E.V.** = Electronic expansion valve
- **Evaporator** = Evaporator
- **Compressor** = Compressor
- **Resistor** = Resistor

Application details

Setpoint	**AP1** = 3.0°C - 37.4°F; **AP2** = 0.0°C - 32.0°F; **AP3** = 0.0°C - 32.0°F
Analog inputs	1 NTC input (**Pb1**)
Digital inputs	1 unset digital input (**H11** = 0)
Digital outputs	**Out 1** relay (default: Compressor)
Buzzer	NO
RTC	NO
Type of defrost	**AP1**, **AP2** = due to compressor stop; **AP3** = ---
End of defrost	**AP1**, **AP2** = due to compressor stop; **AP3** = ---
Active alarms	Pb1 maximum/minimum temperature (**HAL** and **LAL**)
Key configuration	∆: manual defrost (**H31** = 1) ∇: not set (**H32** = 0) ⏻: stand-by (**H33** = 4)

IDNext 961 P (12 Vac/dc - 230 Vac)

Application overview

AP1: AT static refrigerated units

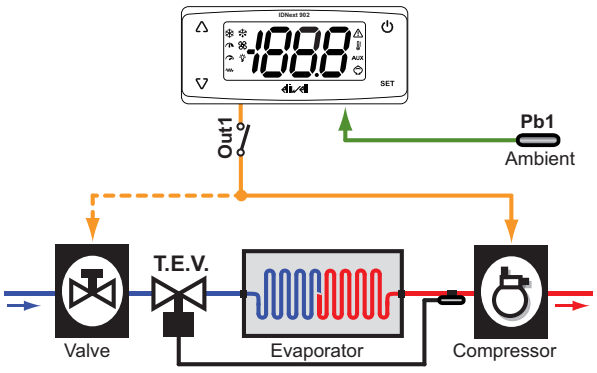

AP2: NT static refrigerated units

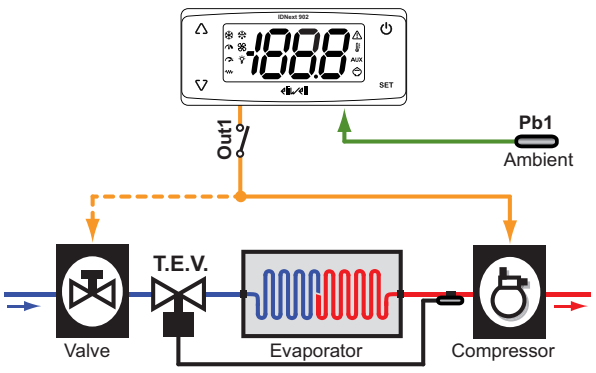

AP3: heat application

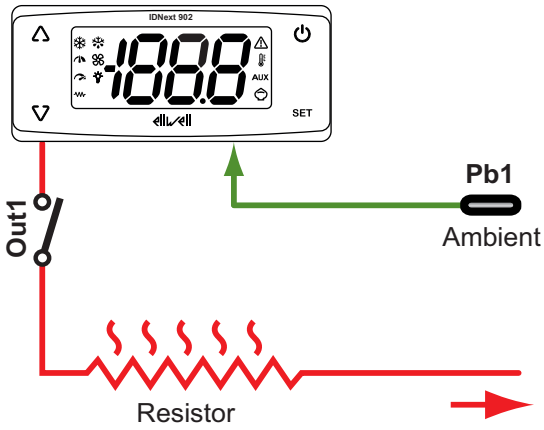

Legend:

- **Ambient** = Ambient
- **Valve** = Valve
- **T.E.V.** = Electronic expansion valve
- **Evaporator** = Evaporator
- **Compressor** = Compressor
- **Resistor** = Resistor

Application details

Setpoint	**AP1** = 3.0°C (37.4°F); **AP2** = 0.0°C (32.0°F); **AP3** = 0.0°C (32.0°F)
Analog inputs	1 NTC input (**Pb1**)
Digital inputs	1 unset digital input (**H11** = 0)
Digital outputs	**Out 1** relay (default: Compressor)
Buzzer	NO
RTC	NO
Type of defrost	**AP1**, **AP2** = due to compressor stop; **AP3** = ---
End of defrost	**AP1**, **AP2** = due to compressor stop; **AP3** = ---
Active alarms	Pb1 maximum/minimum temperature (**HAL** and **LAL**)
Key configuration	∆: manual defrost (**H31** = 1) ∇: not set (**H32** = 0) ⏻: stand-by (**H33** = 4)

IDNext 971 P/B (12 Vac/dc - 230 Vac)

Application overview

AP1: AT refrigerated units

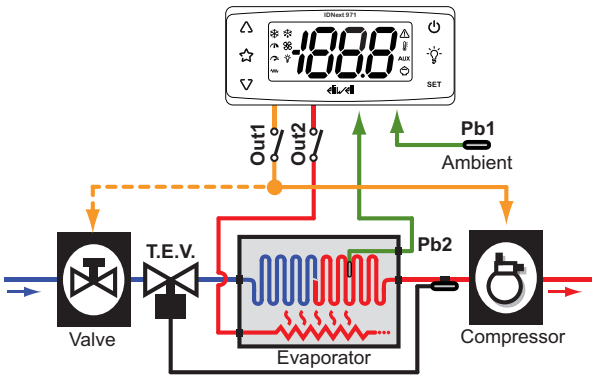

AP2: NT refrigerated units

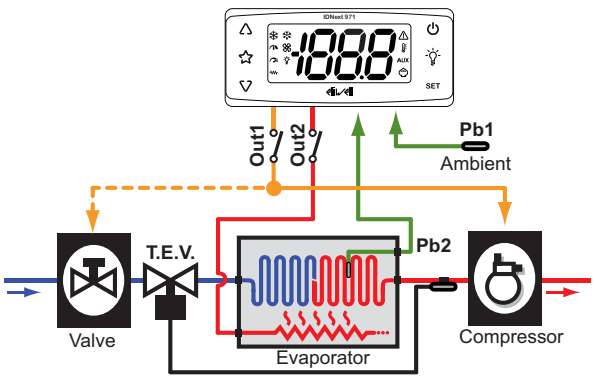

AP3: LT refrigerated units

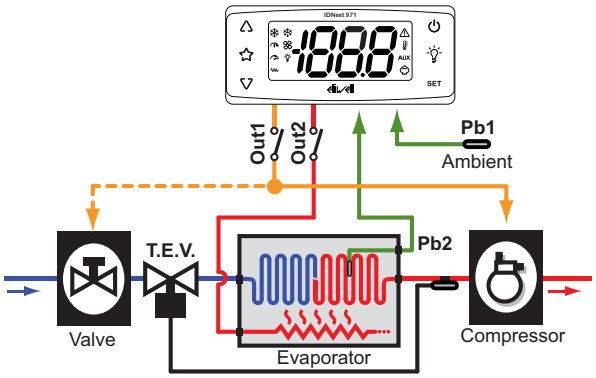

Legend:

- **Ambient** = Ambient
- **Valve** = Valve
- **T.E.V.** = Electronic expansion valve
- **Evaporator** = Evaporator
- **Compressor** = Compressor

Application details

Setpoint	**AP1** = 3.0°C (37.4°F); **AP2** = 0.0°C (32.0°F); **AP3** = -18.0°C (0.4°F)
Analog inputs	2 NTC inputs (**Pb1**, **Pb2**)
Digital inputs	1 unset digital input (**H11** = 0)
Digital outputs	**Out 1** relay (default: Compressor) **Out 2** relay (default: Defrost)
Buzzer	YES
RTC	NO
Type of defrost	Electric heater defrost
End of defrost	due to temperature **dS1** = 8.0°C (46.4°F)
Active alarms	Pb1 maximum/minimum temperature (**HAL** and **LAL**)
Key configuration	△: manual defrost (**H31** = 1) ▽: not set (**H32** = 0) ⏻: stand-by (**H33** = 4) 💡: not set (**H34** = 0) ☆: not set (**H35** = 0)

IDNext 974 P/B (12 Vac/dc - 230 Vac)

Application overview

AP1: AT refrigerated units

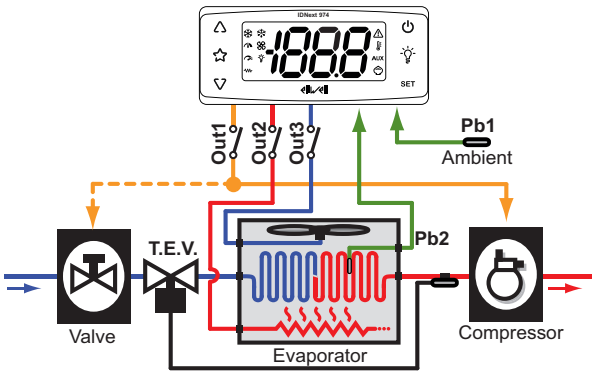

AP2: NT refrigerated units

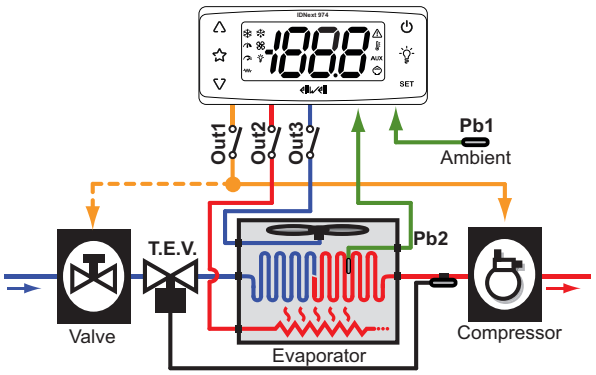

AP3: LT refrigerated units

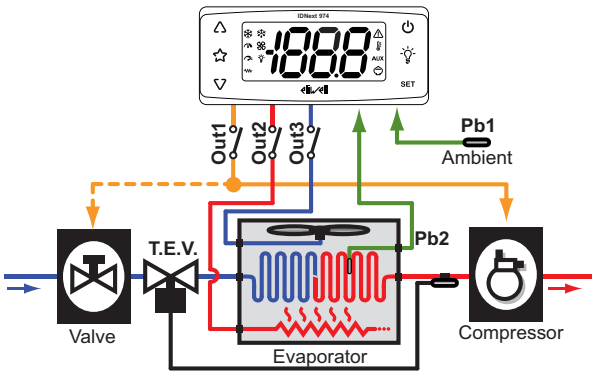

Legend:

- **Ambient** = Ambient
- **Valve** = Valve
- **T.E.V.** = Electronic expansion valve
- **Evaporator** = Evaporator
- **Compressor** = Compressor

Application details

Setpoint	**AP1** = 3.0°C (37.4°F); **AP2** = 0.0°C (32.0°F); **AP3** = -18.0°C (0.4°F)
Analog inputs	2 NTC inputs (**Pb1**, **Pb2**)
Digital inputs	1 unset digital input (**H11** = 0)
Digital outputs	**Out 1** relay (default: Compressor) **Out 2** relay (default: Defrost) **Out 3** relay (default: Evaporator fans)
Buzzer	YES
RTC	NO
Type of defrost	Electric heater defrost
End of defrost	due to temperature **dS1** = 8.0°C (46.4°F)
Active alarms	Pb1 maximum/minimum temperature (**HAL** and **LAL**)
Key configuration	∆: manual defrost (**H31** = 1) ∇: not set (**H32** = 0) ⏻: stand-by (**H33** = 4) 💡: not set (**H34** = 0) ☆: not set (**H35** = 0)

IDNext 974 P/C (230 Vac)

Application overview

AP1: AT refrigerated units

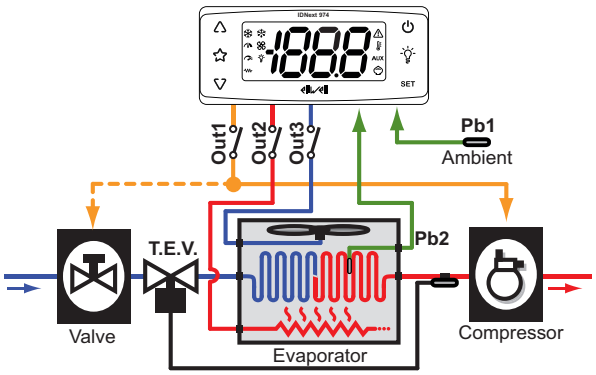

AP2: NT refrigerated units

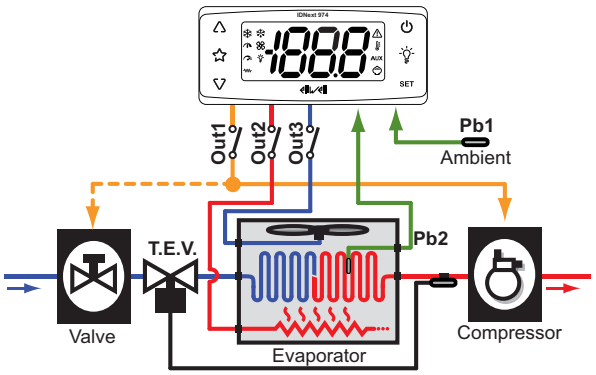

AP3: LT refrigerated units

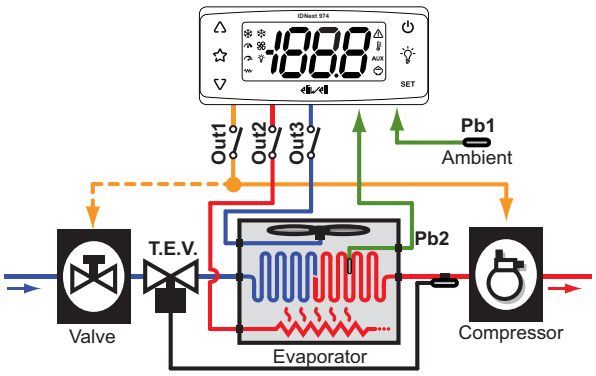

Legend:

- **Ambient** = Ambient
- **Valve** = Valve
- **T.E.V.** = Electronic expansion valve
- **Evaporator** = Evaporator
- **Compressor** = Compressor

Application details

Setpoint	**AP1** = 3.0°C (37.4°F); **AP2** = 0.0°C (32.0°F); **AP3** = -18.0°C (0.4°F)
Analog inputs	2 NTC inputs (**Pb1**, **Pb2**)
Digital inputs	1 unset digital input (**H11** = 0)
Digital outputs	**Out 1** relay (default: Compressor) **Out 2** relay (default: Defrost) **Out 3** relay (default: Evaporator fans)
Buzzer	NO
RTC	YES
Type of defrost	Electric heater defrost
End of defrost	due to temperature **dS1** = 8.0°C (46.4°F)
Active alarms	Pb1 maximum/minimum temperature (**HAL** and **LAL**)
Key configuration	⚠: manual defrost (**H31** = 1) ▽: not set (**H32** = 0) ⏻: stand-by (**H33** = 4) 💡: not set (**H34** = 0) ☆: not set (**H35** = 0)

IDNext 974 P/CI (230 Vac)

Application overview

AP1: AT refrigerated units

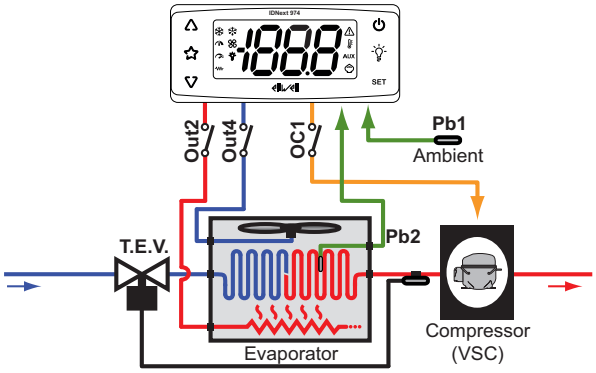

AP2: NT refrigerated units

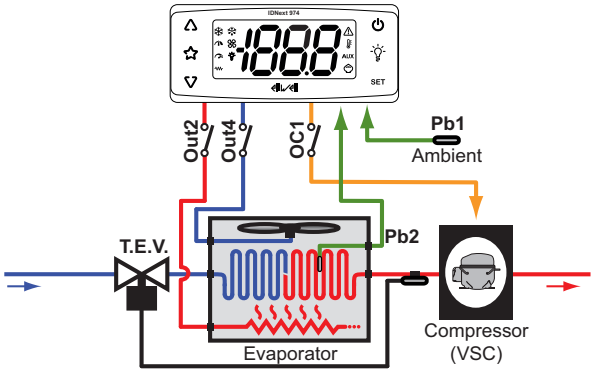

AP3: LT refrigerated units

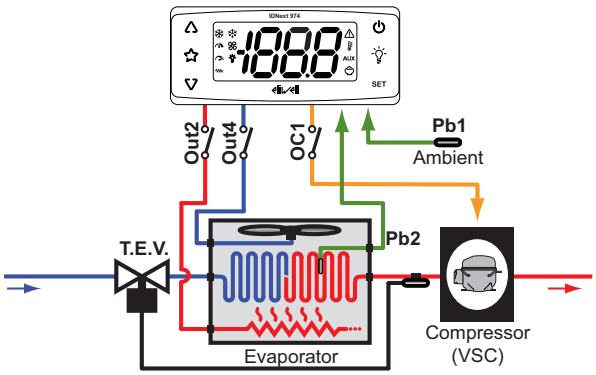

Legend:

- **Ambient** = Ambient
- **Valve** = Valve
- **T.E.V.** = Electronic expansion valve
- **Evaporator** = Evaporator
- **Compressor** = Compressor

Application details

Setpoint	**AP1** = 3.0°C (37.4°F); **AP2** = 0.0°C (32.0°F); **AP3** = -18.0°C (0.4°F)
Analog inputs	2 NTC inputs (**Pb1**, **Pb2**)
Digital inputs	1 unset digital input (**H11** = 0)
Digital outputs	**OC1** relay (default: variable-speed compressor) **Out2** relay (default: Defrost) **Out4** relay (default: Evaporator fans)
Buzzer	NO
RTC	YES
Type of defrost	Electric heater defrost
End of defrost	due to temperature **dS1** = 8.0°C (46.4°F)
Active alarms	Pb1 maximum/minimum temperature (**HAL** and **LAL**)
Key configuration	∆: manual defrost (**H31** = 1) ∇: not set (**H32** = 0) ⏻: stand-by (**H33** = 4) : not set (**H34** = 0) : not set (**H35** = 0)

IDNext 978 P/B (230 Vac)

Application overview

AP1: AT refrigerated units

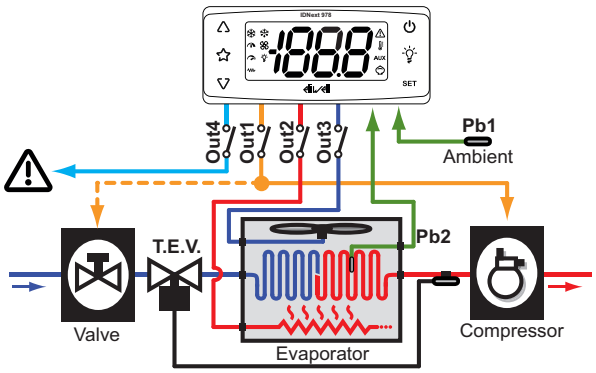

AP2: NT refrigerated units

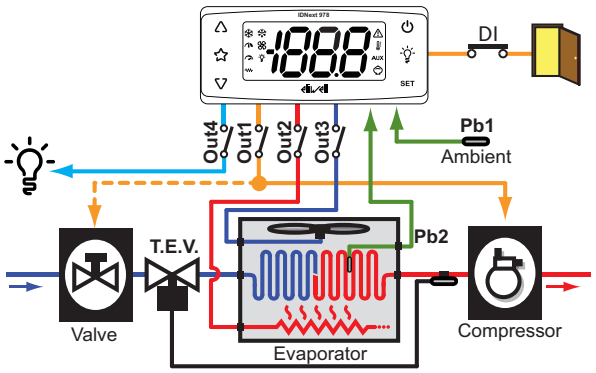

AP3: LT refrigerated units

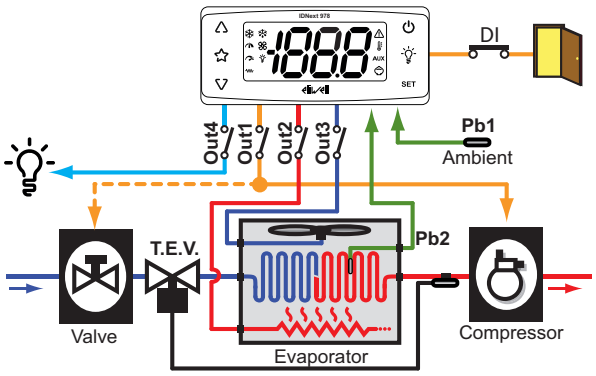

Legend:

- **Ambient** = Ambient
- **Valve** = Valve
- **T.E.V.** = Electronic expansion valve
- **Evaporator** = Evaporator
- **Compressor** = Compressor

Application details

Setpoint	**AP1** = 3.0°C (37.4°F); **AP2** = 0.0°C (32.0°F); **AP3** = -18.0°C (0.4°F)
Analog inputs	2 NTC inputs (**Pb1**, **Pb2**)
Digital inputs	• **AP1**: 1 unset digital input (**H11** = 0) • **AP2**/**AP3**: 1 digital input set for door switch (**H11** = -4) that, if activated, switches off the compressor and fans
Digital outputs	**Out 1** relay (default: Compressor) **Out 2** relay (default: Defrost) **Out 3** relay (default: Evaporator fans) **Out 4** relay (default: **AP1** = Alarm; **AP2**/**AP3** = Light)
Buzzer	YES
RTC	NO
Type of defrost	Electric heater defrost
End of defrost	due to temperature **dS1** = 8.0°C (46.4°F)
Active alarms	Pb1 maximum/minimum temperature (**HAL** and **LAL**)
Key configuration	△: manual defrost (**H31** = 1) ▽: not set (**H32** = 0) ⏻: stand-by (**H33** = 4) ☼: not set (**H34** = 0) ☆: not set (**H35** = 0)

IDNext 978 P/C (230 Vac)

Application overview

AP1: AT refrigerated units

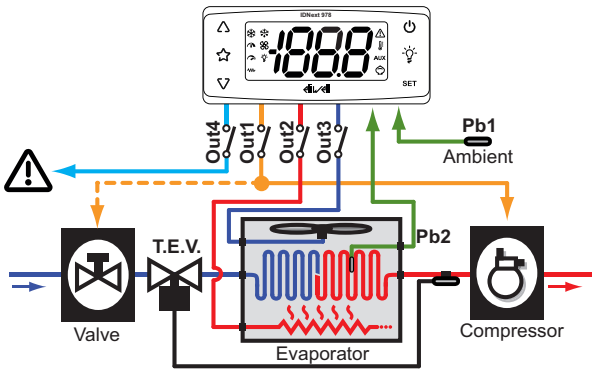

AP2: NT refrigerated units

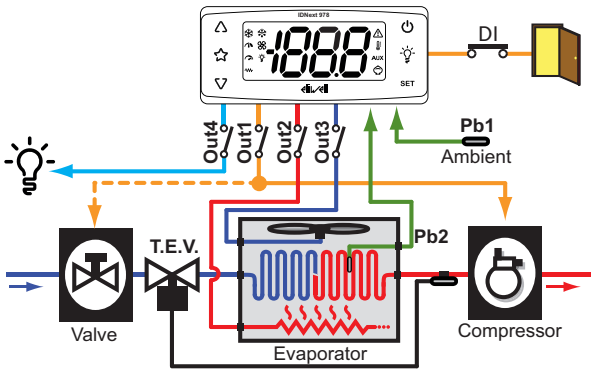

AP3: LT refrigerated units

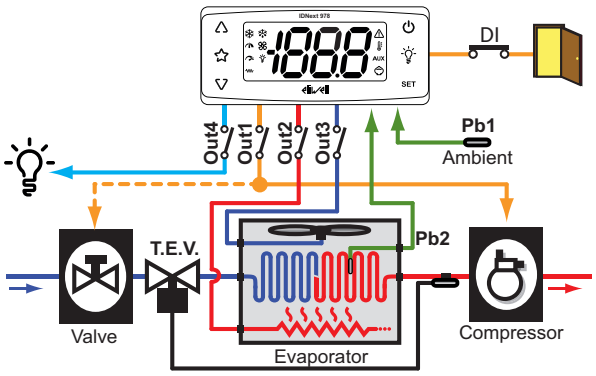

Legend:

- **Ambient** = Ambient
- **Valve** = Valve
- **T.E.V.** = Electronic expansion valve
- **Evaporator** = Evaporator
- **Compressor** = Compressor

Application details

Setpoint	**AP1** = 3.0°C (37.4°F); **AP2** = 0.0°C (32.0°F); **AP3** = -18.0°C (0.4°F)
Analog inputs	2 NTC inputs (**Pb1**, **Pb2**)
Digital inputs	• **AP1**: 1 unset digital input (**H11** = 0) • **AP2**/**AP3**: 1 digital input set for door switch (**H11** = -4) that, if activated, switches off the compressor and fans
Digital outputs	**Out 1** relay (default: Compressor) **Out 2** relay (default: Defrost) **Out 3** relay (default: Evaporator fans) **Out 4** relay (default: **AP1** = Alarm; **AP2**/**AP3** = Light)
Buzzer	NO
RTC	YES
Type of defrost	Electric heater defrost
End of defrost	due to temperature **dS1** = 8.0°C (46.4°F)
Active alarms	Pb1 maximum/minimum temperature (**HAL** and **LAL**)
Key configuration	△: manual defrost (**H31** = 1) ▽: not set (**H32** = 0) ⏻: stand-by (**H33** = 4) ☼: not set (**H34** = 0) ☆: not set (**H35** = 0)

IDNext 978 P/CI (230 Vac)

Application overview

AP1: AT refrigerated units

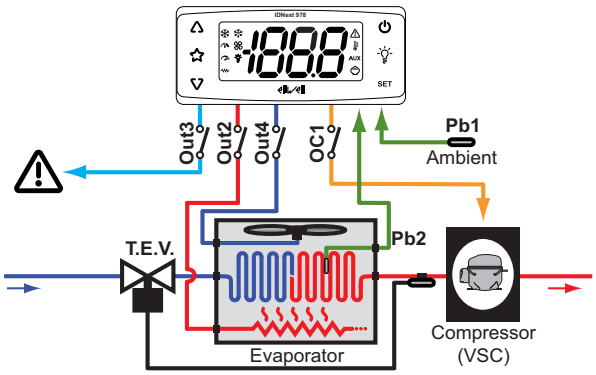

AP2: NT refrigerated units

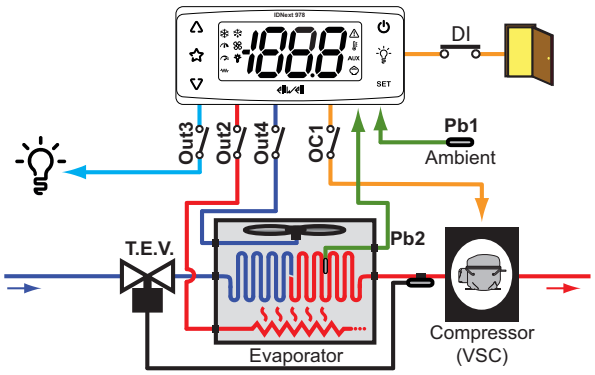

AP3: LT refrigerated units

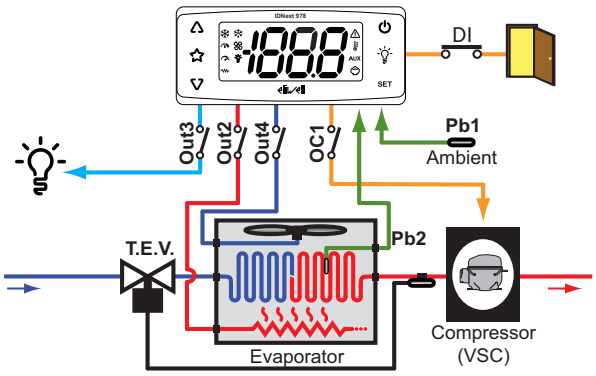

Legend:

- **Ambient** = Ambient
- **Valve** = Valve
- **T.E.V.** = Electronic expansion valve
- **Evaporator** = Evaporator
- **Compressor** = Compressor

Application details

Setpoint	**AP1** = 3.0°C (37.4°F); **AP2** = 0.0°C (32.0°F); **AP3** = -18.0°C (0.4°F)
Analog inputs	2 NTC inputs (**Pb1**, **Pb2**)
Digital inputs	• **AP1**: 1 unset digital input (**H11** = 0) • **AP2**/**AP3**: 1 digital input set for door switch (**H11** = -4) that, if activated, switches off the compressor and fans
Digital outputs	**OC1** relay (default: variable-speed compressor) **Out 2** relay (default: Defrost) **Out 3** relay (default: **AP1** = Alarm; **AP2**/**AP3** = Light) **Out 4** relay (default: Evaporator fans)
Buzzer	NO
RTC	YES
Type of defrost	Electric heater defrost
End of defrost	due to temperature **dS1** = 8.0°C (46.4°F)
Active alarms	Pb1 maximum/minimum temperature (**HAL** and **LAL**)
Key configuration	△: manual defrost (**H31** = 1) ▽: not set (**H32** = 0) ⏻: stand-by (**H33** = 4) ☼: not set (**H34** = 0) ☆: not set (**H35** = 0)

Mechanical installation

Contents

This section includes the following topics:

Before starting 28
Power supply disconnection 28
Operating environment 29
Comments concerning installation 30
Installation 31

Before starting

Read this manual carefully before installing the controller and its accessories.

In particular, ensure conformity with all safety indications, electrical requirements and current legislation for the machine or the process used with this equipment.

The use and application of information contained herein requires experience in the design and programming of automated control systems. Only the machine user, integrator or manufacturer will be aware of all the conditions and factors affecting installation, configuration, operation and maintenance of the machine or process and can therefore identify the associated equipment and corresponding safety interlocks and systems that can be used appropriately and efficiently. When selecting automation and control equipment, other equipment and connected software for a particular application, all local, regional and national standards and/or legislation must be taken into account.

⚠ WARNING

REGULATORY INCOMPATIBILITY

Make sure that all equipment used and systems designed comply with all applicable local, regional and national laws.

Failure to follow these instructions can result in death, serious injury, or equipment damage.

Power supply disconnection

⚠ ⚠ DANGER

RISK OF ELECTRIC SHOCK, EXPLOSION, FIRE OR ARC FLASH

- Disconnect all power from all equipment including connected devices prior to removing any covers or doors, or installing or removing any accessories, hardware, cables or wires.
- Always use a properly rated voltage sensing device to confirm the power is off where and when indicated.
- Before restoring the power supply, replace and secure all covers, hardware components and cables.
- Use only the specified voltage when operating this device and any associated products.
- Use appropriate safety interlocks where personnel and/or equipment hazards exist.
- Install and use this equipment in an enclosure appropriately rated for its intended environment.
- Do not use this equipment for safety-critical functions.
- Do not disassemble, repair, or modify this equipment.

Failure to follow these instructions will result in death or serious injury.

Operating environment

The use of flammable refrigerant gases depends on many factors, including current local, regional and/or national standards.

The devices and relative accessories described in the documentation supplied with the product use components and - to be more specific - electromechanical relays tested in accordance with standard IEC 60079-15 and classified as nC components (non-sparking electrical devices with protection 'n').

Conformity with standard IEC 60079-15 is considered sufficient - and therefore suitable - for commercial refrigeration and HVAC systems using flammable refrigerant gases such as R290. Nevertheless, there may be other limitations, devices, locations and/or machine types (refrigerators, automatic distributors and dispensers, bottle coolers, ice machines, chiller cabinets for self-service facilities, etc.) involved, leading to the application of further restrictions and/or obligations.

The use and application of the information contained in this document requires experience in the design and parameterization/programming of control systems for refrigeration and HVAC systems. Only you, i.e. the original equipment producers, installers or users, can be aware of the conditions and factors present, in addition to the applicable regulations during the planning, installation and setup, operation and maintenance of the machine, or the related processes. Therefore, only you can decide on the suitability of the automation and the associated equipment, and the resulting safety measures and interlock devices that can be applied effectively and adequately in the locations in which the relevant equipment is to be commissioned. When choosing the automation and control equipment - and any other related equipment or software - for a particular application, you must also take account of all the standards set out by applicable national legislation or by the relevant certifying authorities.

When using flammable refrigerant gases, at the end of the installation process for this controller and related equipment you must make sure the machine conforms to current standards and regulations. Although all the declarations and information contained herein are to be considered accurate and reliable, they are not covered by warranty. The information provided herein does not absolve the user from responsibility in terms of performing their own tests and certifications of conformity to all applicable regulations.

⚠ WARNING

REGULATORY INCOMPATIBILITY

Make sure that all equipment used and systems designed comply with all applicable local, regional and national laws.

Failure to follow these instructions can result in death, serious injury, or equipment damage.

Comments concerning installation

Important information

⚠ ⚠ DANGER

RISK OF ELECTRIC SHOCK, EXPLOSION, FIRE OR ARC FLASH

- Disconnect all power from all equipment including connected devices prior to removing any covers or doors, or installing or removing any accessories, hardware, cables or wires.
- Always use a properly rated voltage sensing device to confirm the power is off where and when indicated.
- Before restoring the power supply, replace and secure all covers, hardware components and cables.
- Use only the specified voltage when operating this device and any associated products.
- Use appropriate safety interlocks where personnel and/or equipment hazards exist.
- Install and use this equipment in an enclosure appropriately rated for its intended environment.
- Do not use this equipment for safety-critical functions.
- Do not disassemble, repair, or modify this equipment.

Failure to follow these instructions will result in death or serious injury.

When handling the equipment, take care to avoid damage caused by electrostatic discharge. In particular, the unshielded connectors are extremely vulnerable to electrostatic discharge.

⚠ WARNING

UNINTENDED EQUIPMENT OPERATION DUE TO ELECTROSTATIC DISCHARGE

Before handling the equipment, always discharge the static electricity from the body by touching an earthed surface or type-approved antistatic mat.

Failure to follow these instructions can result in death, serious injury, or equipment damage.

Mechanical dimensions

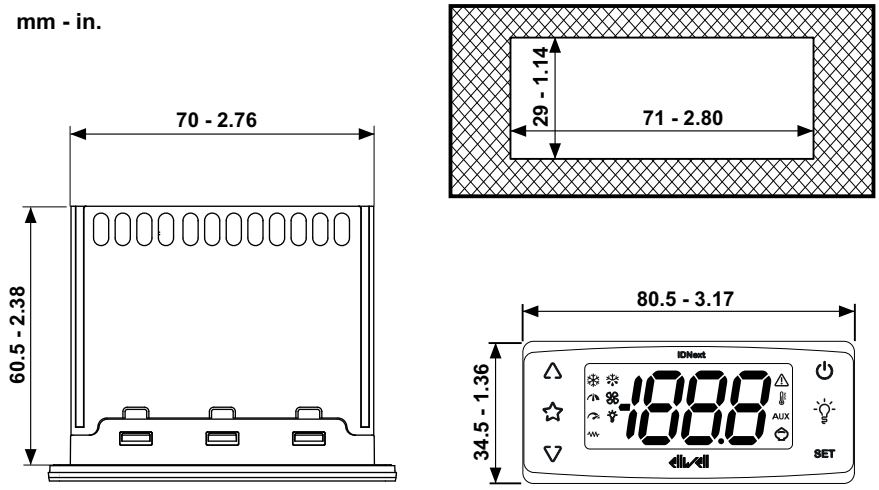

Installation

Installing/uninstalling the controller

Mount the controller horizontally.
To install, proceed as follows:

1. Make a hole measuring 71 x 29 mm (2.80 x 1.14 in.)
2. Introducing the controller
3. Secure it by inserting the brackets in the relevant rails at the 2 sides of the controller, until it clicks into place

To uninstall it, proceed as follows:

1. Press the brackets on the 2 sides of the device until you hear a click and take them out
2. Remove the controller

Note: Leave the area around the slits clear to allow air to circulate, keeping the controller cool.

Note: The panel thickness must be between 0.5 mm (0.02 in.) and 7.5 mm (0.3 in.) inclusive.

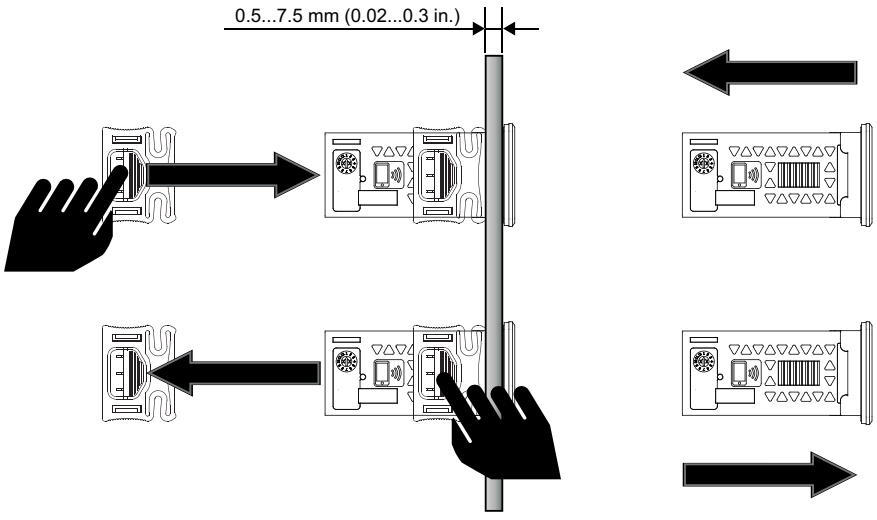

Electrical connections

Contents

This section includes the following topics:

Best wiring practices 33
Connections 35
IDNext 902 P (12 Vac/dc - 230 Vac) 36
IDNext 961 P (12 Vac/dc - 230 Vac) 37
IDNext 971 P/B (12 Vac/dc - 230 Vac) 38
IDNext 974 P/B (12 Vac/dc - 230 Vac) 39
IDNext 974 P/C (230 Vac) 40
IDNext 974 P/CI (230 Vac) 40
IDNext 978 P/B (230 Vac) 41
IDNext 978 P/C (230 Vac) 41
IDNext 978 P/CI (230 Vac) 42

Best wiring practices

Warnings

⚠ ⚠ DANGER

RISK OF ELECTRIC SHOCK, EXPLOSION, FIRE OR ARC FLASH

- Disconnect all power from all equipment including connected devices prior to removing any covers or doors, or installing or removing any accessories, hardware, cables or wires.
- Always use a properly rated voltage sensing device to confirm the power is off where and when indicated.
- Before restoring the power supply, replace and secure all covers, hardware components and cables.
- Use only the specified voltage when operating this device and any associated products.
- Use appropriate safety interlocks where personnel and/or equipment hazards exist.
- Install and use this equipment in an enclosure appropriately rated for its intended environment.
- Do not use this equipment for safety-critical functions.
- Do not disassemble, repair, or modify this equipment.

Failure to follow these instructions will result in death or serious injury.

Wiring guidelines

⚠ ⚠ DANGER

RISK OF ELECTRIC SHOCK AND/OR FIRE

- Do not expose the equipment to liquids.
- Do not exceed the temperature and humidity ranges specified in the technical data and keep the area surrounding the cooling slits aerated.
- Do not apply dangerous voltages to the SELV connection terminals (see "Connections" chapter).
- Only connect compatible accessories - as specified in the section "Accessories" - to the device.
- Only use cables with a suitable cross-section as indicated in the section "Wiring guidelines".

Failure to follow these instructions will result in death or serious injury.

⚠ ⚠ DANGER

LOOSE WIRING CAN RESULT IN ELECTRIC SHOCK AND/OR FIRE

Tighten the connections in compliance with the technical specifications for torque values and make sure the wiring is correct.

Failure to follow these instructions will result in death or serious injury.

Use copper wires (obligatory).
The table below shows the type and size of permitted cables for the type of screw terminals illustrated below and the torque values:

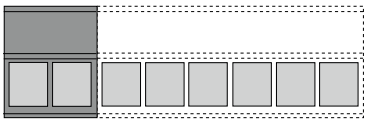

mm / in. 6.5 / 0.26								
mm²	0.2…2.5	0.2…2.5	0.25…2.5	0.25…2.5	2 x 0.2...0.75	2 x 0.2…0.75	2 x 0.25...0.75	2 x 0.5...1.5
AWG	*24…14*	*24…14*	*24...14*	*24...14*	*2 x 24…18*	*2 x 24…18*	*2 x 24…18*	*2 x 20...16*

Ø 3.5 mm (*0.14 in.*)	C	N•m	0.5...0.6
		lb-in	*4.42...5.31*

The table below shows the type and size of permitted cables for the type of screw terminals illustrated below and the torque values.

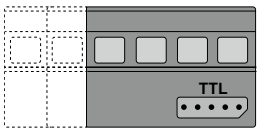

mm / in. 6.0 / 0.24		
mm²	0.05…2.5	0.05…1.5
AWG	*30…14*	*30…16*

Ø 3.5 mm (*0.14 in.*)	C	N•m	0.5
		lb-in	*4.5*

⚠ WARNING

RISK OF OVERHEATING AND/OR FIRE

- Do not use with loads other than those indicated in the technical data.
- Do not exceed the maximum permitted current; in the case of higher loads, use a contactor with suitable power.
- Power lines and output connections must be suitably wired and protected by means of fuses when required by national and local regulations.
- Connect the relay output (Out1...Out4), including the shared hub, using cables with a cross-section of 2.5 mm^2 (14 AWG) and a length of at least 200 mm (7.87 in.).

Failure to follow these instructions can result in death, serious injury, or equipment damage.

NOTICE

UNINTENDED EQUIPMENT OPERATION

The SELV wiring must be laid separately from all the other wiring (see "Connections" chapter).

Failure to follow these instructions can result in equipment damage.

⚠ WARNING

REGULATORY INCOMPATIBILITY

Make sure that all equipment used and systems designed comply with all applicable local, regional and national laws.

Failure to follow these instructions can result in death, serious injury, or equipment damage.

NOTICE

INOPERABLE DEVICE

- For connection of the probes, the digital input and the Open Collector output, use cables no longer than 10 m (32.80 ft).
- For TTL serial line connection, use cables no longer than 1 m (3.28 ft).
- For all instruments powered at 12 Vac/dc, use power cables no longer than 3 m (9.84 ft)

Failure to follow these instructions can result in equipment damage.

The temperature (NTC/PTC/Pt1000) probes have no specified connection polarity; the connections can be extended using a normal bipolar cable. Extending the probe wiring influences the electromagnetic compatibility (EMC) of the controller.

Connections

Wiring diagrams

Click on the controller model to access the corresponding wiring diagram:

- **IDNext 902 P**
- **IDNext 961 P**
- **IDNext 971 P/B**
- **IDNext 974 P/B**
- **IDNext 974 P/C**
- **IDNext 974 P/CI**
- **IDNext 978 P/B**
- **IDNext 978 P/C**
- **IDNext 978 P/CI**

IDNext 902 P (12 Vac/dc - 230 Vac)

IDNext 902 P (12 Vac/dc)

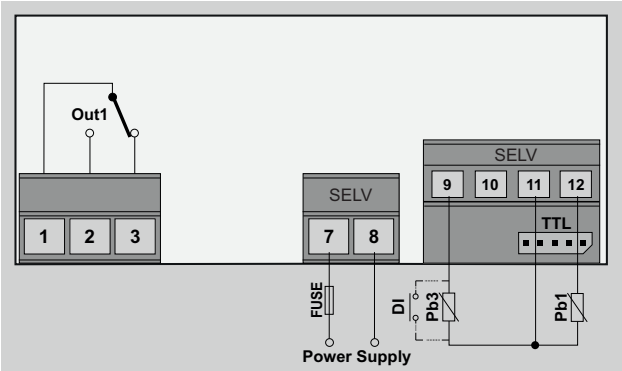

Terminals	Description
1-2-3	Compressor relay (**Out1**)
7-8	Power supply input
11-9	Digital input DI (**H11**≠0 and **H43**=n) / probe Pb3 (**H11**=0 and **H43**=y)
11-12	Probe Pb1
SELV	SELV terminals
TTL	TTL serial (SELV)
FUSE	Time-delay fuse 500 mA (T500mAH250V)

IDNext 902 P (230 Vac)

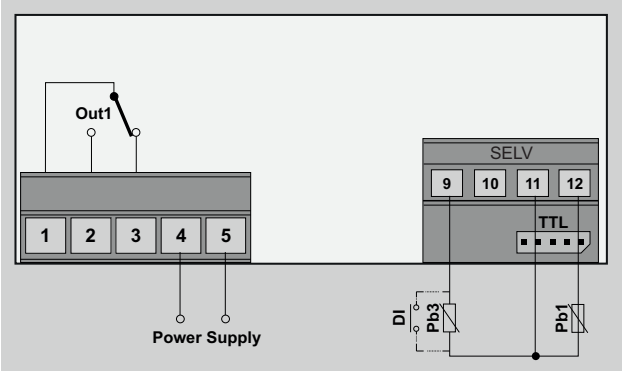

Terminals	Description
1-2-3	Compressor relay (**Out1**)
4-5	Power supply input
11-9	Digital input DI (**H11**≠0 and **H43**=n) / probe Pb3 (**H11**=0 and **H43**=y)
11-12	Probe Pb1
SELV	SELV terminal
TTL	TTL serial (SELV)

IDNext 961 P (12 Vac/dc - 230 Vac)

IDNext 961 P (12 Vac/dc)

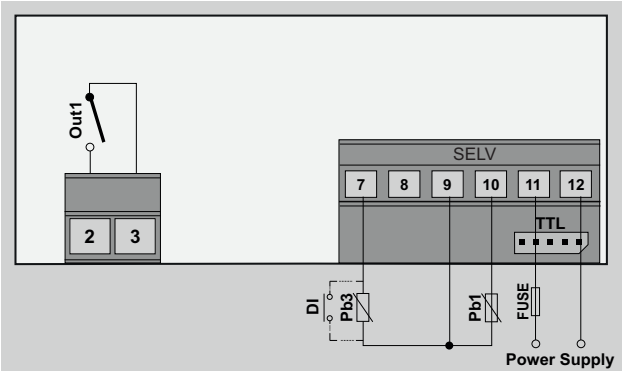

Terminals	Description
3-2	Compressor relay (**Out1**)
9-7	Digital input DI (**H11**≠0 and **H43**=n) / probe Pb3 (**H11**=0 and **H43**=y)
9-10	Pb1 probe
11-12	Power supply input
SELV	SELV terminal
TTL	TTL serial (SELV)
FUSE	Time-delay fuse 500 mA (T500mAH250V)

IDNext 961 P (230 Vac)

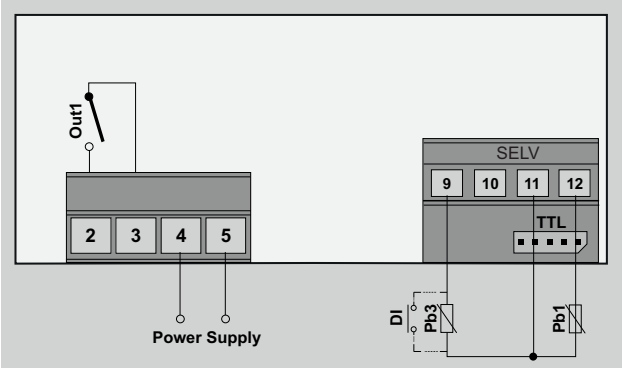

Terminals	Description
3-2	Compressor relay (**Out1**)
4-5	Power supply input
11-9	Digital input DI (**H11**≠0 and **H43**=n) / probe Pb3 (**H11**=0 and **H43**=y)
11-12	Pb1 probe
SELV	SELV terminal
TTL	TTL serial (SELV)

IDNext 971 P/B (12 Vac/dc - 230 Vac)

IDNext 971 P/B (12 Vac/dc)

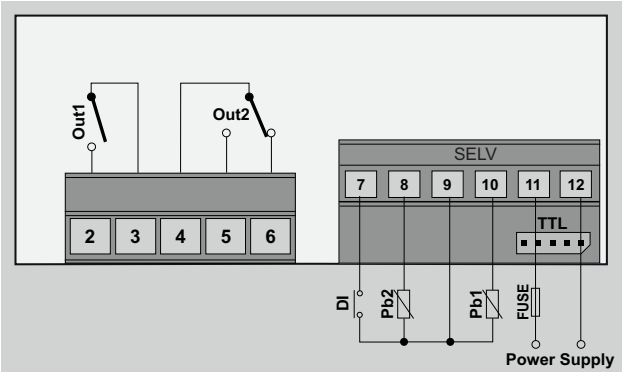

Terminals	Description
3-2	Compressor relay (**Out1**)
4-5-6	Defrost relay (**Out2**)
9-7	Digital input DI
9-8	Pb2 probe
9-10	Pb1 probe
11-12	Power supply input
SELV	SELV terminal
TTL	TTL serial (SELV)
FUSE	Time-delay fuse 500 mA (T500mAH250V)

IDNext 971 P/B (230 Vac)

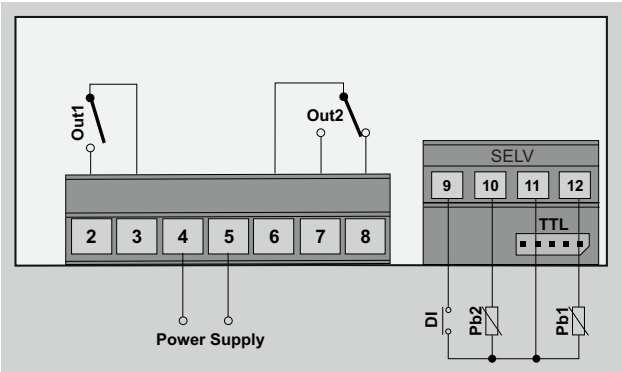

Terminals	Description
3-2	Compressor relay (**Out1**)
4-5	Power supply input
6-7-8	Defrost relay (**Out2**)
11-9	Digital input DI
11-10	Pb2 probe
11-12	Pb1 probe
SELV	SELV terminal
TTL	TTL serial (SELV)

IDNext 974 P/B (12 Vac/dc - 230 Vac)

IDNext 974 P/B (12 Vac/dc)

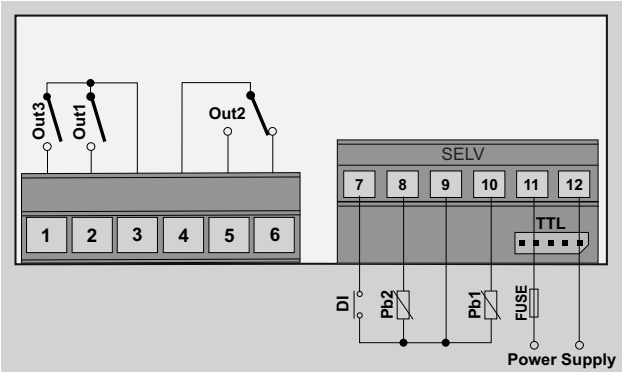

Terminals	Description
3-1	Evaporator fans relay (**Out3**)
3-2	Compressor relay (**Out1**)
4-5-6	Defrost relay (**Out2**)
9-7	Digital input DI
9-8	Pb2 probe
9-10	Pb1 probe
11-12	Power supply input
SELV	SELV terminal
TTL	TTL serial (SELV)
FUSE	Time-delay fuse 500 mA (T500mAH250V)

IDNext 974 P/B (230 Vac)

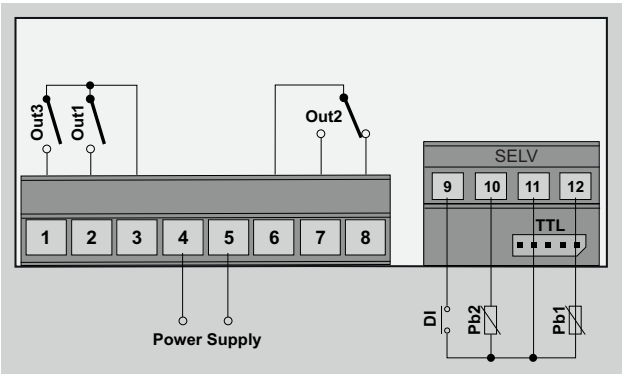

Terminals	Description
3-1	Evaporator fans relay (**Out3**)
3-2	Compressor relay (**Out1**)
4-5	Power supply input
6-7-8	Defrost relay (**Out2**)
11-9	Digital input DI
11-10	Pb2 probe
11-12	Pb1 probe
SELV	SELV terminal
TTL	TTL serial (SELV)

IDNext 974 P/C (230 Vac)

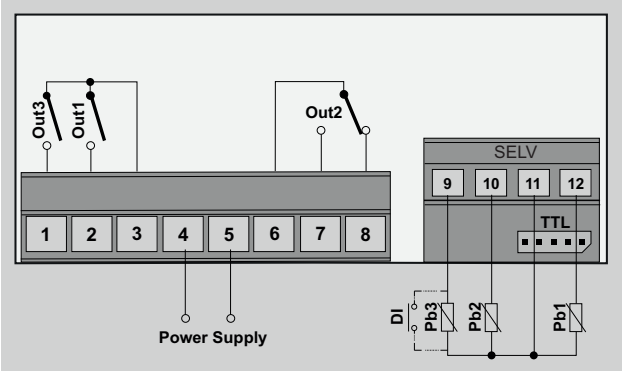

Terminals	Description
3-1	Evaporator fans relay (**Out3**)
3-2	Compressor relay (**Out1**)
4-5	Power supply input
6-7-8	Defrost relay (**Out2**)
11-9	Digital input DI (**H11**≠0 and **H43**=n) / probe Pb3 (**H11**=0 and **H43**=y)
11-10	Pb2 probe
11-12	Pb1 probe
SELV	SELV terminal
TTL	TTL serial (SELV)

IDNext 974 P/CI (230 Vac)

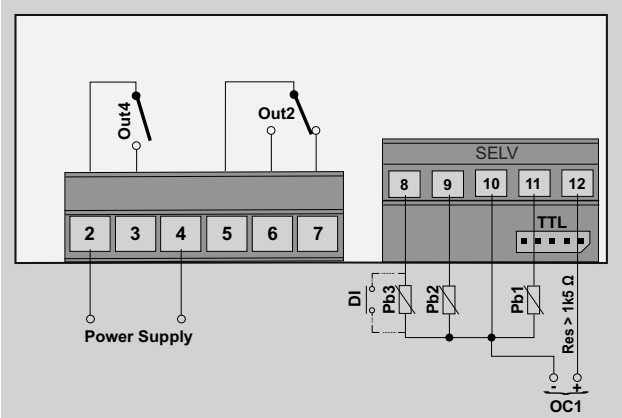

Terminals	Description
2-3	Evaporator fans relay (**Out4**)
2-4	Power supply input
5-6-7	Defrost relay (**Out2**)
10-8	Digital input DI (**H11**≠0 and **H43**=n) / probe Pb3 (**H11**=0 and **H43**=y)
10-9	Pb2 probe
10-11	Pb1 probe
10-12	Open Collector Output: Negative terminal OC1 (-) and positive terminal OC1 (+). Load resistance > 1.5 kΩ
SELV	SELV terminal
TTL	TTL serial (SELV)

IDNext 978 P/B (230 Vac)

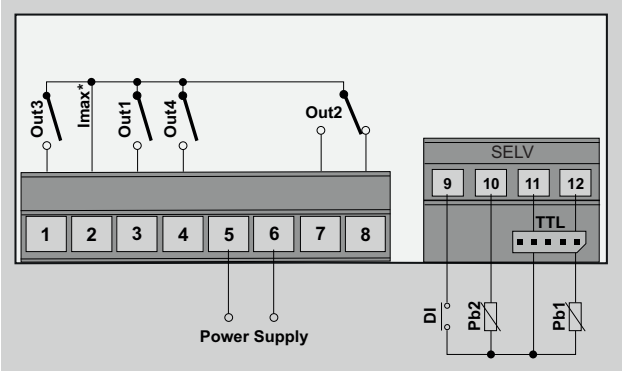

Terminals	Description
2-1	Evaporator fans relay (**Out3**)
2-3	Compressor relay (**Out1**)
2-4	Alarm relay (**Out4**)
5-6	Power supply input
2-7-8	Defrost relay (**Out2**)
11-9	Digital input DI
11-10	Pb2 probe
11-12	Pb1 probe
SELV	SELV terminal
TTL	TTL serial (SELV)
Imax*	Maximum current 17 A

IDNext 978 P/C (230 Vac)

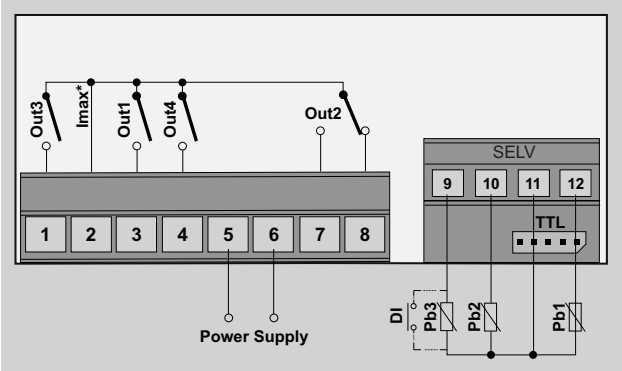

Terminals	Description
2-1	Evaporator fans relay (**Out3**)
2-3	Compressor relay (**Out1**)
2-4	Alarm relay (**Out4**)
5-6	Power supply input
2-7-8	Defrost relay (**Out2**)
11-9	Digital input DI (**H11**≠0 and **H43**=n) / probe Pb3 (**H11**=0 and **H43**=y)
11-10	Pb2 probe
11-12	Pb1 probe
SELV	SELV terminal
TTL	TTL serial (SELV)
Imax*	Maximum current 17 A

IDNext 978 P/CI (230 Vac)

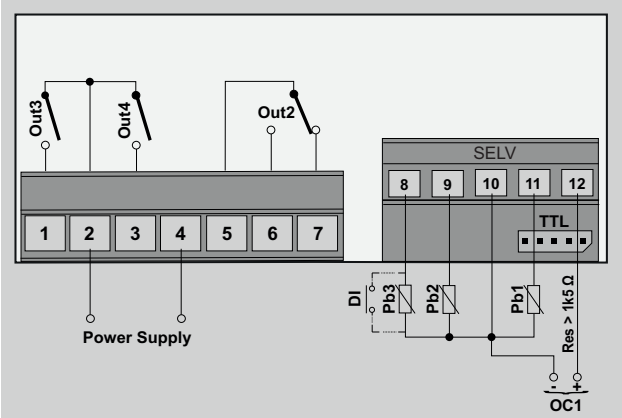

Terminals	Description
2-1	Alarm relay (**Out3**)
2-3	Evaporator fans relay (**Out4**)
2-4	Power supply input
5-6-7	Defrost relay (**Out2**)
10-8	Digital input DI (**H11**≠0 and **H43**=n) / probe Pb3 (**H11**=0 and **H43**=y)
10-9	Pb2 probe
10-11	Pb1 probe
10-12	Open Collector Output: Negative terminal OC1 (-) and positive terminal OC1 (+). Load resistance > 1.5 kΩ
SELV	SELV terminal
TTL	TTL serial (SELV)

Technical characteristics

Contents

This section includes the following topics:

Technical data 44
Power supply and consumption 44
Output characteristics 45
Input characteristics 46
Further Information 46

Technical data

The product conforms to the following harmonized standards	EN 60730-1 and EN 60730-2-9
Device construction	Built-in electronic control device
Device purpose	Operating control (not safety) device
Type of action	1.B
Pollution class	2
Overvoltage category	II
Nominal pulse voltage	2500 V
Power supply	see table below
Consumption	see table below
Environmental operating conditions	Temperature: -5...55°C (23...131°F) Humidity: 10…90 % RH (non-condensing)
Transportation and storage conditions	Temperature: -30...85°C (-22...185°F) Humidity: 10…90 % RH (non-condensing)
Software class	A
Front panel environmental protection	Open type

Power supply and consumption

Model	Power supply	Consumption (maximum)
IDNext 902 P (12 Vac/dc)	12 Vac (±10%) 50/60 Hz	3 VA
	12 Vdc (±10%)	1.5 W
IDNext 902 P (230 Vac)	230 Vac (±10%) 50/60 Hz	5 VA
IDNext 961 P (12 Vac/dc)	12 Vac (±10%) 50/60 Hz	5 VA
	12 Vdc (±10%)	2.5 W
IDNext 961 P (230 Vac)	230 Vac (±10%) 50/60 Hz	5.5 VA
IDNext 971 P/B (12 Vac/dc)	12 Vac (±10%) 50/60 Hz	5 VA
	12 Vdc (±10%)	2.5 W
IDNext 971 P/B (230 Vac)	230 Vac (±10%) 50/60 Hz	5.5 VA
IDNext 974 P/B (12 Vac/dc)	12 Vac (±10%) 50/60 Hz	5 VA
	12 Vdc (±10%)	2.5 W
IDNext 974 P/B (230 Vac)	230 Vac (±10%) 50/60 Hz	5.5 VA
IDNext 974 P/C (230 Vac)	230 Vac (±10%) 50/60 Hz	5.5 VA
IDNext 974 P/CI (230 Vac)	230 Vac (±10%) 50/60 Hz	5.5 VA
IDNext 978 P/B (230 Vac)	230 Vac (±10%) 50/60 Hz	5.5 VA
IDNext 978 P/C (230 Vac)	230 Vac (±10%) 50/60 Hz	5.5 VA
IDNext 978 P/CI (230 Vac)	230 Vac (±10%) 50/60 Hz	5.5 VA

Note: check the power supply specified on the controller label.

Output characteristics

Model	Output	EU (230 Vac maximum)	USA (230 Vac maximum)
IDNext 902 P (12 Vac/dc - 230 Vac)	**Out 1**	NO 10(6) A - NC 9(5) A - CO 9 A resistive	NO 10 A - NC 9 A resistive NO 5FLA 30LRA
IDNext 961 P (12 Vac/dc - 230 Vac)	**Out 1**	12 (8) A	12FLA 72LRA
IDNext 971 P/B (12 Vac/dc - 230 Vac)	**Out 1**	12(8) A	12FLA 72LRA
	Out 2	NO 8(4) A - NC 6(3) A - CO 6 A resistive	NO 8 A - NC 6 A - CO 6 A resistive NO 4.9FLA 29.4LRA
IDNext 974 P/B (12 Vac/dc - 230 Vac)	**Out 1**	12(8) A	12FLA - 72LRA
	Out 2	NO 8(4) A - NC 6(3) A - CO 6 A resistive	NO 8 A - NC 6 A - CO 6 A resistive NO 4.9FLA 29.4LRA
	Out 3	5(2) A	5 A resistive 2FLA 12LRA
IDNext 974 P/C (230 Vac)	**Out 1**	12(8) A	12FLA 72LRA
	Out 2	NO 8(4) A - NC 6(3) A - CO 6 A resistive	NO 8 A - NC 6 A - CO 6 A resistive NO 4.9FLA 29.4LRA
	Out 3	5(2) A	5 A resistive 2FLA 12LRA
IDNext 974 P/CI (230 Vac)	**OC1**	16 Vdc (±40%) - Load resistance > 1.5 kΩ	
	Out 2	NO 8(4) A - NC 6(3) A - CO 6 A resistive	NO 8 A - NC 6 A - CO 6 A resistive NO 4.9FLA 29.4LRA
	Out 4	10(6) A	10FLA 60LRA
IDNext 978 P/B (230 Vac)	**Out 1**	10(6) A	10FLA 60LRA
	Out 2	NO 8(4) A - NC 6(3) A - CO 6 A resistive	NO 8 A - NC 6 A - CO 6 A resistive NO 4.9FLA 29.4LRA
	Out 3	5(2) A	5 A resistive 2FLA 12LRA
	Out 4	5(2) A	5 A resistive 2FLA 12LRA
	Maximum current on common (**Out 1 + Out 2 + Out 3 + Out 4**) 17 A		
IDNext 978 P/C (230 Vac)	**Out 1**	10(6) A	10FLA 60LRA
	Out 2	NO 8(4) A - NC 6(3) A - CO 6 A resistive	NO 8 A - NC 6 A - CO 6 A resistive NO 4.9FLA 29.4LRA
	Out 3	5(2) A	5 A resistive 2FLA 12LRA
	Out 4	5(2) A	5 A resistive 2FLA 12LRA
	Maximum current on common (**Out 1 + Out 2 + Out 3 + Out 4**) 17 A		
IDNext 978 P/CI (230 Vac)	**OC1**	16 Vdc (±40%) - Load resistance > 1.5 kΩ	
	Out 2	NO 8(4) A - NC 6(3) A - CO 6 A resistive	NO 8 A - NC 6 A - CO 6 A resistive NO 4.9FLA 29.4LRA
	Out 3	5(2) A	5 A resistive 2FLA 12LRA
	Out 4	10(6) A	10FLA 60LRA

Input characteristics

Analog inputs	• **IDNext 902 P**: 1 NTC/PTC/Pt1000 input • **IDNext 961 P**: 1 NTC/PTC/Pt1000 input • **IDNext 971 P/B**: 2 NTC/PTC/Pt1000 inputs • **IDNext 974 P/B**: 2 NTC/PTC/Pt1000 inputs • **IDNext 974 P/C**: 2 NTC/PTC/Pt1000 inputs • **IDNext 974 P/CI**: 2 NTC/PTC/Pt1000 inputs • **IDNext 978 P/B**: 2 NTC/PTC/Pt1000 inputs • **IDNext 978 P/C**: 2 NTC/PTC/Pt1000 inputs • **IDNext 978 P/CI**: 2 NTC/PTC/Pt1000 inputs
Digital inputs	• **IDNext 902 P**: 1 voltage free digital input (DI), also configurable as an input for NTC/PTC/Pt1000 probe (Pb3) • **IDNext 961 P**: 1 voltage free digital input (DI), also configurable as an input for NTC/PTC/Pt1000 probe (Pb3) • **IDNext 971 P/B**: 1 voltage free digital input (DI). • **IDNext 974 P/B**: 1 voltage free digital input (DI). • **IDNext 974 P/C**: 1 voltage free digital input (DI), also configurable as an input for NTC/PTC/Pt1000 probe (Pb3) • **IDNext 974 P/CI**: 1 voltage free digital input (DI), also configurable as an input for NTC/PTC/Pt1000 probe (Pb3) • **IDNext 978 P/B**: 1 voltage free digital input (DI). • **IDNext 978 P/C**: 1 voltage free digital input (DI), also configurable as an input for NTC/PTC/Pt1000 probe (Pb3) • **IDNext 978 P/CI**: 1 voltage free digital input (DI), also configurable as an input for NTC/PTC/Pt1000 probe (Pb3)

Further Information

Probe values

Display ranges	-99.9…99.9 or -999…999
Measuring range	**NTC**: -50...110°C (-58...230°F); **PTC**: -55...140°C (-67...284°F); **Pt1000**: -55...150°C (-67...302°F); (on display with 3 digits + sign)
Accuracy	**NTC**: best of 0.5% of the fullscale* + 1 digit. (*) fullscale = overall interval breadth -50...110°C (-58...230°F) **PTC**: best of 0.5% of the fullscale** + 1 digit. (**) fullscale = overall interval breadth -55...140°C (-67...284°F) **Pt1000**: -55...70°C (-67...158°F): best of 0.5% of the fullscale*** + 1 digit; 70...150°C (158...302°F): best of 1.0% of the fullscale*** + 1 digit. (***) fullscale = overall interval breadth -55...150°C (-67...302°F)
Resolution	0.1°C (0.1°F)

Mechanical characteristics

Connectors	TTL serial for connection of compatible accessories
Dimensions	Front panel 80.5 x 34.5 mm (3.17 x 1.36 in.), depth 60.5 mm (2.38 in.)
Mounting panel thickness	0.5...7.5 mm (0.02...0.3 in.)
Terminals	Screw

Note: the technical characteristics provided in this document concerning measurement (range, accuracy, resolution, etc.) refer to the instrument itself only and not to any accessories supplied, such as the probes.

User interface and operation

Contents

This section includes the following topics:

User interface 48
Using the controller 50
Setting the probes 52
Setting the displayed values 53

User interface

Interface

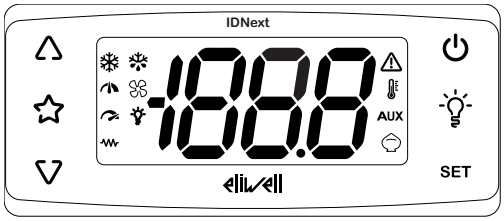

Keys

Keys	press and release	press for at least 5 seconds
△	• Scroll through the menu options. • Increase the values.	From outside the menus only. Can be configured by the user (parameter **H31**). Default: activates manual defrost.
☆	Direct access to the function set with parameter **H35**. From outside the menus only.	---
▽	• Scroll through the menu options. • Decrease the values.	• From outside the menus only. Can be configured by the user (parameter **H32**) • Unlock keypad (press and hold for at least 3 seconds)
⏻	• Go back up one level in the menu. • Confirm the parameter value.	From outside the menus only. Can be configured by the user (parameter **H33**) Default: Activate stand-by.
💡	Direct access to the function set with parameter **H34**. From outside the menus only.	---
SET	• Access the "Machine Status" menu. • Display alarms (if present). • When switching on, access selection mode for the application to be loaded.	• Access the "Programming" menu. • Confirm commands.
▽ + SET	Press and hold for 5 seconds when switching on to load the preset applications (only after unlocking the keypad)	

Note: some keys may not be present, depending on the model.

Note: On startup or when 30 seconds have passed since the last action carried out on the user interface, the controller keypad locks automatically. If it is locked and any key is pressed, the text "LOC" will appear. To unlock the keypad, press and hold ▽ for at least 3 seconds until the text "UnL" appears.

Icons

Icon	Function	Description
	Compressor	On steadily: compressor active Flashing: delay, protection or activation inhibited Off: compressor off
	Defrost	On steadily: defrost active Flashing: defrost activated manually or via digital input Off: defrost inactive
	Evaporator fans	On steadily: fans active Off: fans off
	Average VSC speed	On steadily: Vmin ≤ required speed < 90% Vmax Off: 0% ≤ required speed < Vmin
	Maximum VSC speed	On steadily: required speed ≥ 90% Vmax Off: required speed < 90% Vmax
	Light	On steadily: light on Off: light off
	Heating	On steadily: Heating regulator active Off: Heating regulator off
	Alarm	On steadily: alarm present Flashing: alarm silenced Off: No alarm active
	Temperature	On steadily: a temperature is displayed (**°C** or **°F**) Off: a value not relating to temperature or a label is displayed
AUX	AUX	On steadily: AUX output active (depending on model) Flashing: Deep cooling active Off: AUX output off
	Energy saving	On steadily: Energy saving active Flashing: reduced set active

Note: **Vmin** = minimum compressor speed; **Vmax** = maximum compressor speed.

Note: some icons may not be available for activation, depending on the model.

Using the controller

Switching on for the first time

Once the electrical connections have been completed, simply power up the device for it to start working.

At the first startup:

1. Select and load the preset application - **AP1**, **AP2** or **AP3** - that best reflects the usage requirements.
2. Check and, if necessary, adjust the value of the main controller parameters to adapt the selected application to your system.
3. Make sure there are no active alarms.

Loading Preset Applications

The procedure for loading one of the preset applications is:

1. Switch on the controller
2. Press and hold ∇ for at least 3 seconds, until the keypad unlock label “UnL” appears
3. Within 30 seconds of switching the controller on, press and hold **SET** + ∇ for at least 5 seconds, until the label “AP1” appears
4. Scroll through applications **AP1**, **AP2** and **AP3** using ∆ and ∇
5. Confirm the selected preset application using **SET**.
   Note: The process can be canceled by pressing ⏻ or letting a timeout occur (15 seconds)
6. If the procedure was completed successfully, the display will show "**yES**"; otherwise it will show "**no**"
7. The regulator will restart and revert to showing the main display

The procedure for loading one of the preset applications restores the respective default values, with the exception of the parameters NON specific to the application that retain the value set previously. These values, left unaltered, may not be suitable and may therefore need to be changed.

NOTICE
INOPERABLE DEVICE Check the parameters after loading a preset application. **Failure to follow these instructions can result in equipment damage.**

Setting the setpoint

1. To unlock the keypad, press and hold ∇ for at least 3 seconds, until the label “**UnL**” appears.
2. Press and release **SET** to access the “Machine status” menu.
3. Scroll through the folders with ∆ and ∇ until you find the folder **SEt**.
4. Press **SET** to view the current setpoint value.
5. Change the setpoint value using ∆ and ∇ within 15 seconds.
6. To confirm the value press **SET** or ⏻, or let a timeout occur (15 seconds).

Locking/unlocking the keypad

The keypad locks automatically in the following situations:

- on startup
- after 30 seconds of inactivity

To unlock the keypad, press and hold ∇ for at least 3 seconds, until the label “**UnL**” appears

Viewing the probe values

1. Unlock the keypad by pressing and holding ∇ for at least 3 seconds, until the label “**UnL**” appears.
2. Press and release **SET** to access the “Machine status” menu.
3. Scroll through the folders with ∆ and ∇ until you find the folder **Pb1**, **Pb2** or **Pb3**.
4. Press **SET** to view the value measured by the corresponding probe.

Notes:

- the displayed value cannot be changed.
- folder **Pb2** can only be viewed on models that manage probe Pb2.
- folder **Pb3** can only be viewed on models that manage probe Pb3.

Setting frequently used functions

Some frequently used functions may be paired with the keys by suitably configuring the corresponding parameters; they can then be activated by pressing and holding the paired key. **Note**: some keys may not be present, depending on the model.

Key	Parameter
	H31
	H32
	H33
	H34
	H35

Value H31/H32/H33/H34/H35	Description
0	disabled
1	defrost
2	AUX
3	reduced set
4	stand-by
5	**nPL** autotuning procedure (VSC models)
6	**tun** autotuning procedure (VSC models)
7	deep cooling
8	light

Setting the main parameters

See "User" menu in the parameters table for the various models.

Setting the probes

Introduction

Only connect probes of the same type to **IDNext -HC** (all NTC, PTC or Pt1000).

Probe inputs

Depending on the model, the controller has the following inputs:

- one or two analog inputs (**Pb1** / **Pb2**)
- one digital input (**DI**)
- one analog/digital multifunctional input that can be configured as a digital input (**H11**≠0 and **H43**=n) or analog probe Pb3 (**H11**=0 and **H43**=y) for models without buzzer.

Setting the probe type

To configure the probe type, you need to set parameter **H00** in folder **CnF**, within the "Installer" menu:

H00 value	Probe type
0	PTC
1 (default)	NTC
2	Pt1000

Probe calibration

In folder **diS**, within the "Installer" menu, you will find parameters **CA1** (probe Pb1), **CA2** (probe Pb2) and **CA3** (probe Pb3) to force an additional value (with sign) when reading the corresponding probe (if managed by that specific model).

Setting the displayed values

Introduction

The following settings refer to the parameters in folder **diS**.

Display with decimal point

You need to set parameter **ndt**:

ndt value	Description
y	Display with decimal point and resolution to tenths of a degree
n	Display with no decimal point

Note: this setting only influences the displaying of data, not the resolution of the measurement or the accuracy of the controller's calculations.

Default display

You need to set parameter **ddd**:

ddd value	Description
0	Display setpoint
1	Display the value read by Pb1
2	Display the value read by Pb2
3	Display the value read by Pb3 (only if **H11**=0 and **H43**=y)

Note: If the selected probe is not managed by that specific model, the displayed data should not be considered reliable.

Display during defrost

You need to set parameter **ddL**:

ddL value	Description
0	Display the values read by Pb1
1	Display the value read by Pb1 at the start of defrost
2	Display the label **dEF**

Set the unit of measure for the temperatures

You need to set parameter **dro**:

dro value	Description
0	Display the temperature in °C
1	Display the temperature in °F

Note: this setting only influences how the temperatures read by the probes are displayed. After changing the unit of measure from °C to °F, the value of parameters **SEt**, **diF**, etc, remains the same and they will take on a different meaning, since they are expressed in a new unit of measure (**SEt** = 10°C becomes **SEt** = 10°F).

Defrost

Contents

This section includes the following topics:

Introduction 55
Display and alarm operation 56
Manual defrost 57
Defrost Modulating 59
Standard defrost 68
Dual evaporator defrost 75

Introduction

In addition to Standard defrosts, a **Modulating** defrost has been developed with the aim of activating the defrost function "when necessary", on the basis of conditions defined previously.

In models that manage probe Pb3, defrost can be managed on two separate evaporators that, on the basis of the value of parameter **H45**, can be activated individually, at the same time or alternately.

List of defrost types

Click on the desired defrost type to access the relevant section:

- Defrost Modulating
- Standard defrost
- Dual evaporator defrost

Operating conditions

Defrosting removes ice from the surface of the evaporator.
If **dt** ≠ 0, once defrost is complete, a dripping cycle takes place to prevent the water left on the evaporator from freezing again.

Defrost is triggered automatically if:

- the temperature of the evaporator is lower than the defrost end setpoint **dS1** (**dS2** for defrost on the second evaporator)*.
- the defrost activation timer has elapsed but the temperature of the first evaporator is lower than the defrost end setpoint **dS1** (**dS2** for defrost on the second evaporator)*.

Defrost is NOT triggered automatically if:

- a manual defrost is already underway.
- the defrost activation timer has elapsed and the temperature of the first evaporator is higher than the defrost end setpoint **dS1** (**dS2** for defrost on the second evaporator), in which case a new timer count will begin*.

(*) models that manage probe Pb2.

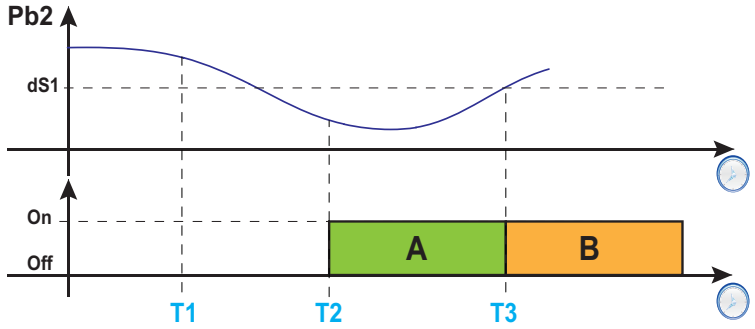

Legend: **A** = Defrost; **B** = Dripping; **T1** = Defrost request rejected; **T2** = Defrost request accepted; **T3** = End of defrost and start of dripping cycle.

Setting the dripping interval

To activate dripping at the end of the defrost cycle, set parameter **dt** ≠ 0. During dripping, the fans are switched off even if **Fdt** < **dt**.

Note: parameter **dt** is only present in models that manage probe Pb2 and that can control the evaporator fans.

Parameters

Parameter	Description
dS1	Temperature value set for the end of defrost on evaporator 1.
dS2	Temperature value set for the end of defrost on evaporator 2.
Fdt	Fan activation delay after a defrost.
dt	Dripping duration.

Display and alarm operation

Alarm operation during defrost

You can activate an alarm for defrost ending due to timeout, by setting parameter **dAt** = y (see alarm **Ad2** in the section "Alarms and indications" a pagina 108).

Note: this function can only be activated on models that manage probe Pb2.

In the event of a regulation probe (Pb1) error, defrosts will still take place and, during defrost, the temperature alarm associated with the probe error will be excluded.

Displayed values

By setting parameter **ddL**, you can choose the values displayed during the defrost phase until the end of dripping time.

The value shown on the display may be configured in one of the following ways:

- **ddL** = 0: display the temperature read by the regulation probe (Pb1)
- **ddL** = 1: display the temperature read by the regulation probe (Pb1) at the start of defrost
- **ddL** = 2: display (steadily) the label **dEF** (defrost)

Unlocking the display

The display can be unlocked in one of the following ways:

- on reaching the setpoint and after dripping
- on reaching the display unlock timeout value, defined by parameter **Ldd**

Parameters

Parameter	Description
dAt	Defrost ended due to timeout alarm indication.
ddL	Display mode during defrosting.
Ldd	Display unlock timeout value - label **dEF**.

Manual defrost

Introduction

The Manual Defrost function can be activated in one of the following ways:

- press and hold a key (configured with **H3x** = 1)
- digital input (**DI**) (only if **H11** = ±4)
- using a Supervisor, via Modbus command (serial)
- via APP (if the BTLE Dongle is fitted. See accessories section)

Note: if the **OdO** count is in progress, the defrost cycle does not begin, the request is rejected and the display will flash three times to indicate that defrosting is not possible.

Functioning conditions

If manual defrost is activated, depending on the value of parameter **dMR**, the defrost interval count (**dit** time):

- if **dMR** (0) = **n** the count is not reset.
- if **dMR** (1) = **y** the count is reset

If the **OdO** count is in progress and the evaporator temperature is greater than the value of parameter **dS1*** (Evaporator 1) or **dS2*** (Evaporator 2), the defrost will not be activated and the display will flash three times.

(*): only models that manage probe Pb2.

Note: defrost activation takes place upon closure (H11 >0) or opening (H11<0) of the digital input DI (if activated). You can only activate a defrost, not end an active one. Any defrost or dripping cycle in progress and the defrost or dripping time cannot be suspended.

Regulation examples

Example 1 (H11 = 4):

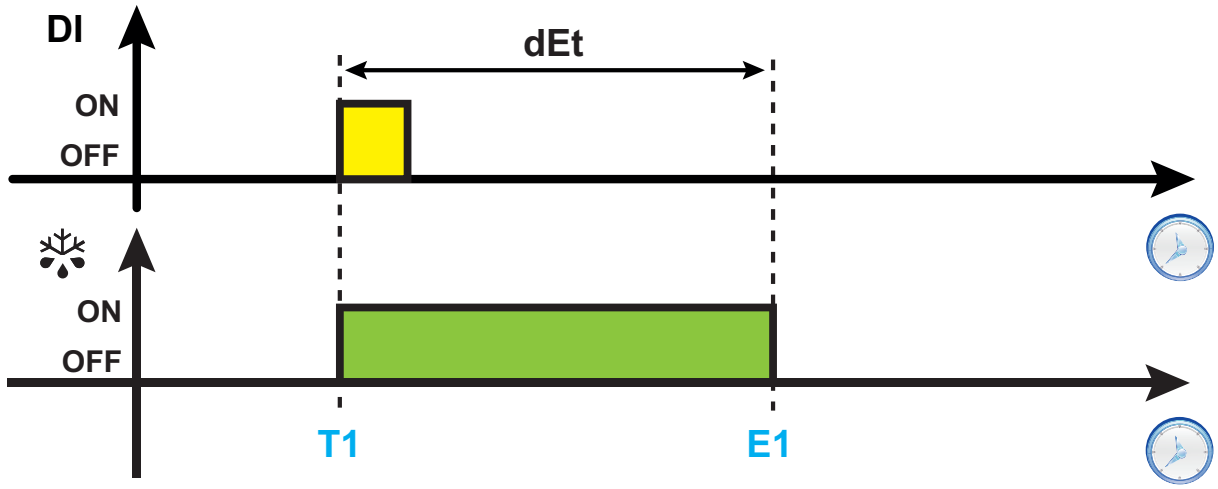

Example 2 (H11 = 4):

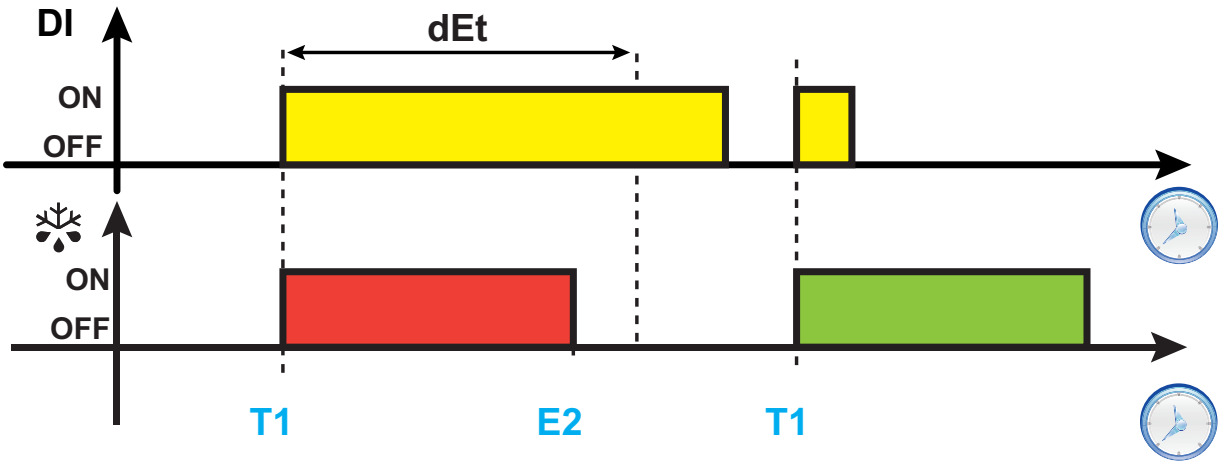

Example 3 (H11 = 4):

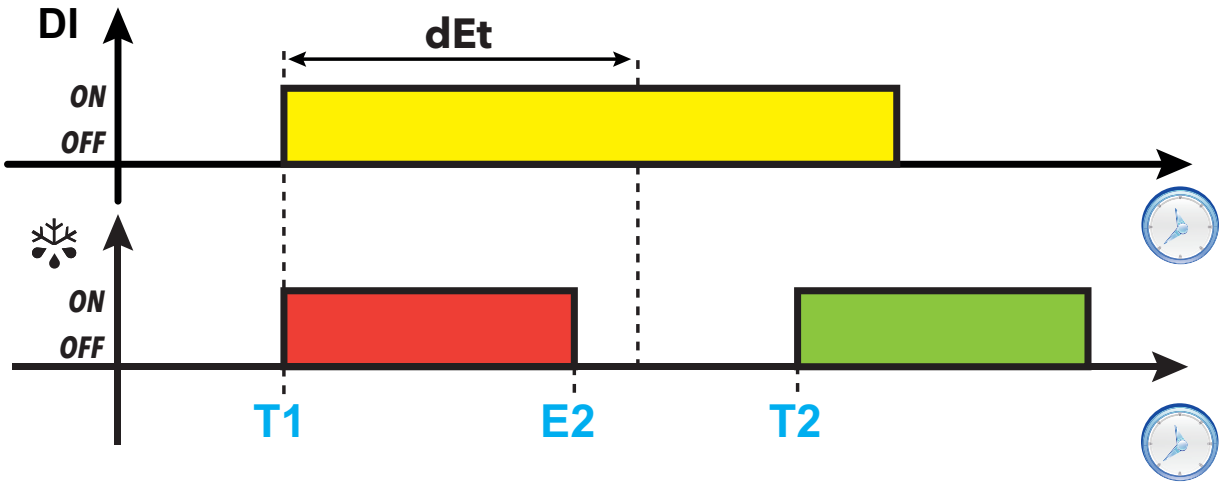

Legend: **T1** = Defrost request; **T2** = Regular defrost request with fixed expiration; **E1** = End of defrost due to timeout; **E2** = End of defrost due to temperature.

Parameters

Parameter	Description
dit	Time interval between one defrost and the next.
OdO	Output activation delay time from switching on the controller or after a power failure.
dS1	Evaporator 1 defrost end temperature.
dS2	Evaporator 2 defrost end temperature.
H11	Digital input 1/polarity configuration.
H31	△ key configuration.
H32	▽ key configuration.
H33	⏻ key configuration.
H34	💡 key configuration.
H35	☆ key configuration.

Defrost Modulating

The Modulating defrost methods that can be activated simultaneously are as follows:

Parameters	Activation method
d00/d01	Modulating defrost: Compressor running time The defrost is activated when the sum of compressor operating period durations reaches the value **d00**.
dit/d11	Modulating defrost: Instrument running time The defrost is activated when the instrument operating period duration reaches the value **dit**.
d20	Modulating defrost: Compressor stop The defrost is activated when the compressor switches off (still with the value of parameter **d20** = 1).
d40...d44	Modulating defrost: Evaporator temperature The defrost is activated when the Evaporator temperature drops below the set threshold **d41**.
d90...d94	Modulating defrost: RTC (Real Time Clock) The defrost will be activated at preset intervals and on specified days (RTC with fixed or regular intervals)

Defrost Modulating: Compressor running time

This defrost can be configured via the following parameters:

Parameter	Description
d00	Compressor running time before defrost is activated
d01	Set the unit of measure in **d00**: • **0** = hours • **1** = minutes • **2** = seconds

When the compressor on time is equal to **d00**, defrost is active.

the value of **d00** is calculated as the sum of all the compressor on times.

Regulation diagram

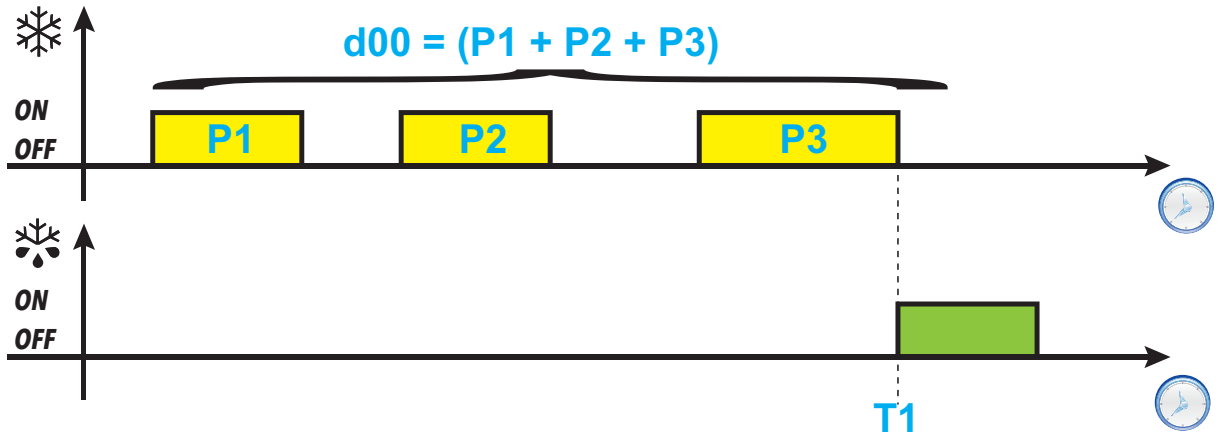

Legend: **Px** = Compressor running; **T1** = Defrost request

Defrost Modulating: Instrument running time

This defrost can be configured via the following parameters:

Parameter	Description
dit	Time interval between one defrost and the next
d11	Set the unit of measure in **dit**: • **0** = hours • **1** = minutes • **2** = seconds

After the instrument is switched on, a meter is activated and remains on. When the **dit** time has elapsed, defrost will be activated (as long as the conditions are correct to do so).

The meter will start a new count until the next defrost is activated.

Regulation diagram

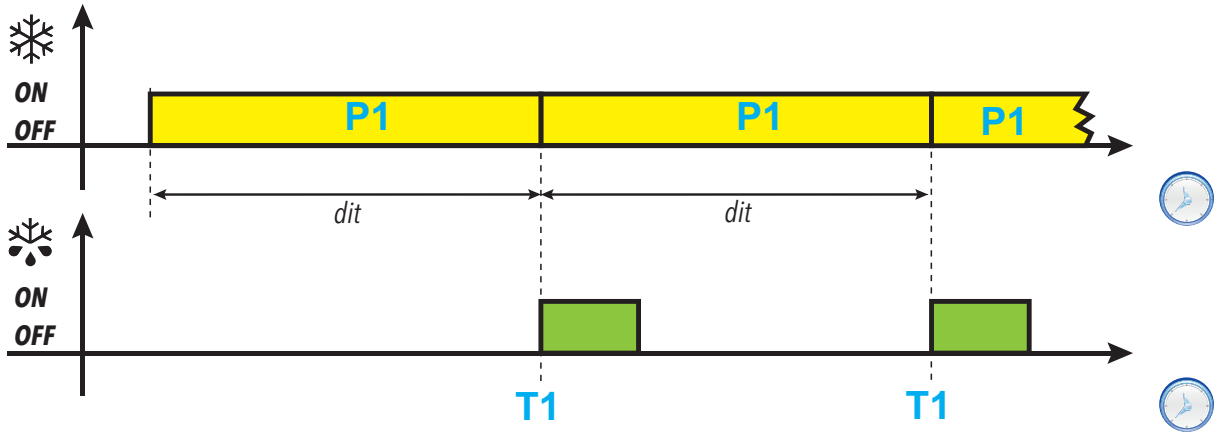

Legend: **P1** = Controller running; **T1** = Defrost request

Defrost Modulating: Compressor stop

This defrost can be configured via the following parameters:

Parameter	Description
d20	Can be used to activate the defrost when the compressor is off. • **0** = mode disabled. • **1** = enabled. Defrost is activated when the compressor switches off.

Regulation diagram

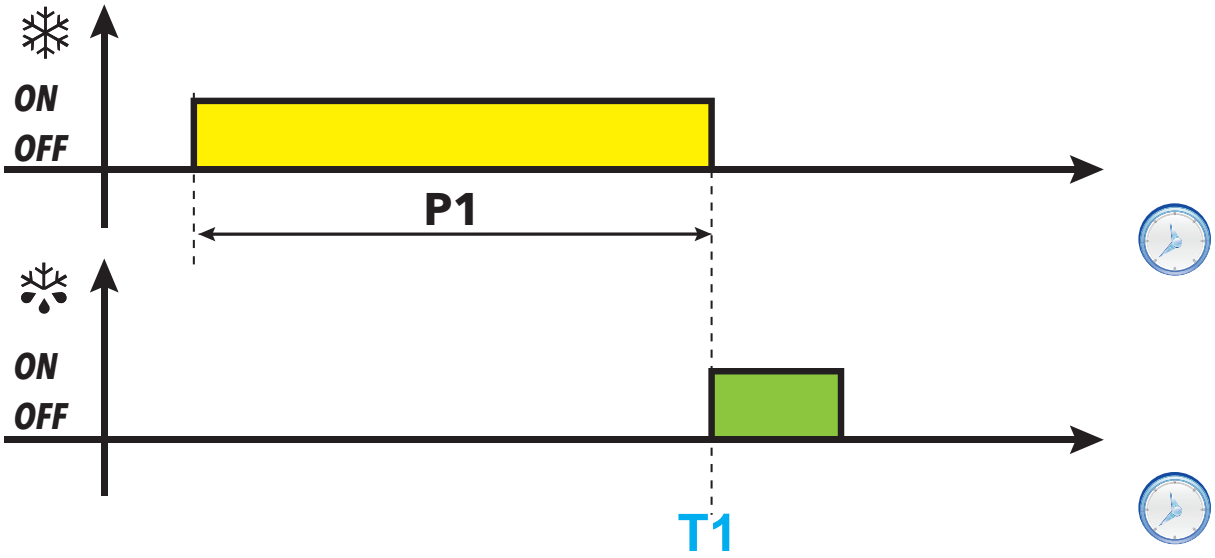

Legend: **P1** = Compressor running; **T1** = Defrost request

Defrost Modulating: Evaporator temperature

This defrost can be configured via the following parameters:

Parameter	Description
d40	Enables/disables use of probe Pb2. • **0** = mode disabled • **1** = enabled. Defrost runs according to the value read by Pb2 (refers only to the defrost with threshold)
d41	Sets the defrost activation threshold (on the value read by probe Pb2)
d42	Sets the maximum time for which the evaporator can remain under the threshold **d41**
d43	Sets the type of incremental time count in which the evaporator temperature remains under the threshold value. • **0** = incremental count independent of the compressor status • **1** = incremental count with compressor on (when the compressor is off the incremental count is reset) • **2** = incremental count independent of the compressor status. The incremental count stops when the temperature rises above the threshold **d41** • **3** = incremental count with compressor on and until the temperature rises above the threshold **d41**
d44	Sets the threshold management mode. • **0** = absolute value (for example: **d41** = -25°C means that the threshold temperature is exactly -25°C) • **1** = relative value (negative offset, relative to the value measured by the defrost probe Pb2 (if **d40** = 1) at the end of the first cooling cycle or on startup). Set the threshold to a value equal to the value measured by probe Pb2 at the end of the first cooling cycle or at startup (if **d40** = 1) reduced by the amount set in parameter **d41**.

Note: this function can only be activated in models which manage probe Pb2 (as long as the conditions are correct to do so).

Regulation diagrams

d43 = 0: count independent of the compressor status

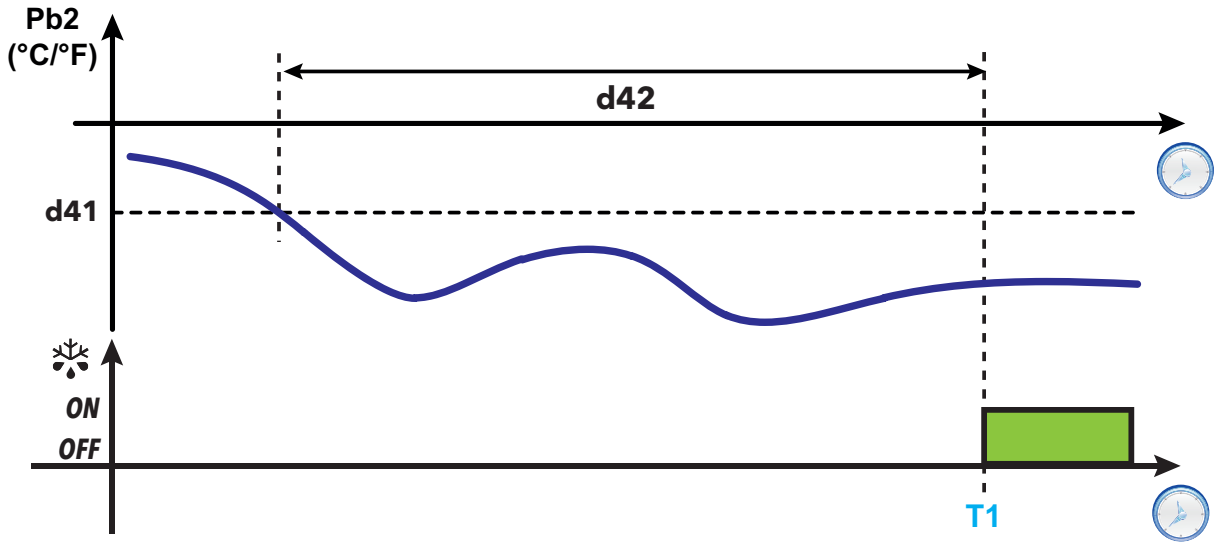

d43 = 1: count with compressor on

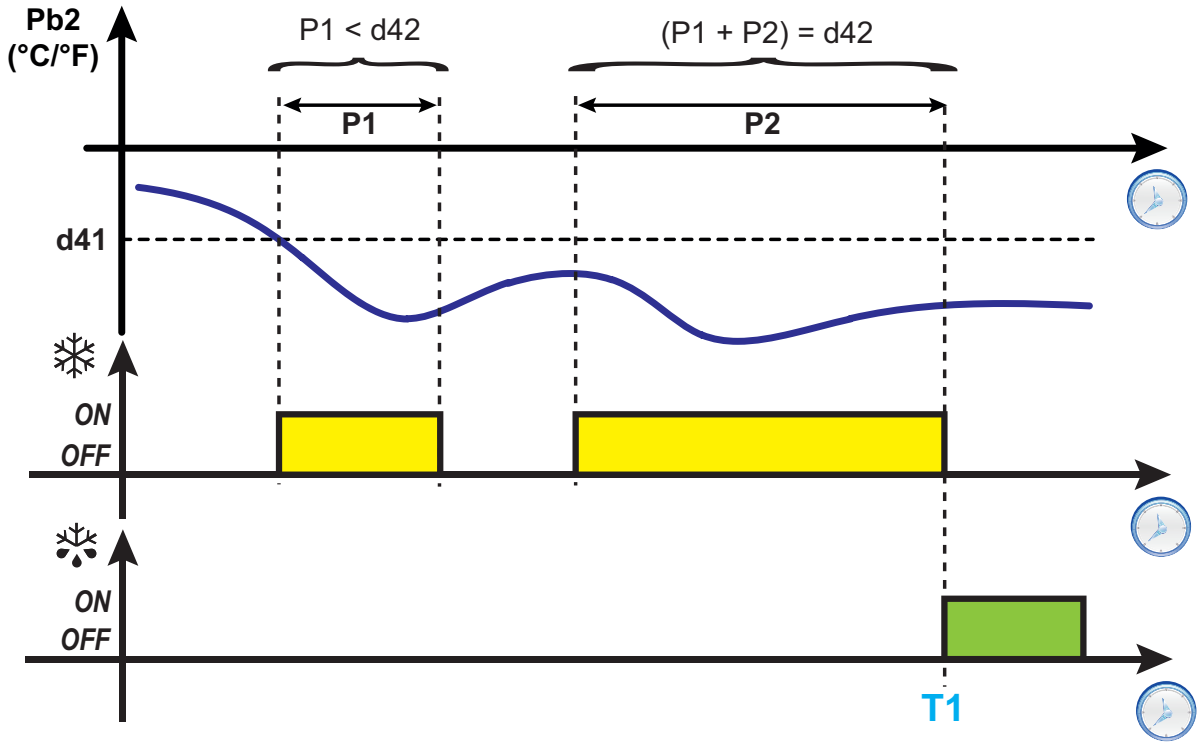

d43 = 2: count independent of the compressor status, count stop above the threshold

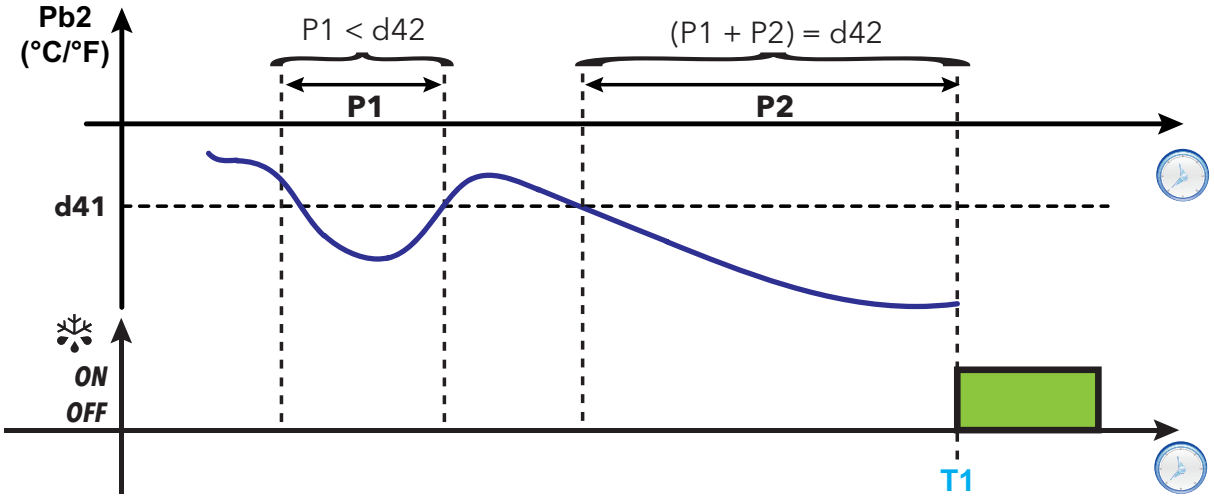

d43 = 3: count with compressor on, count stop above the threshold

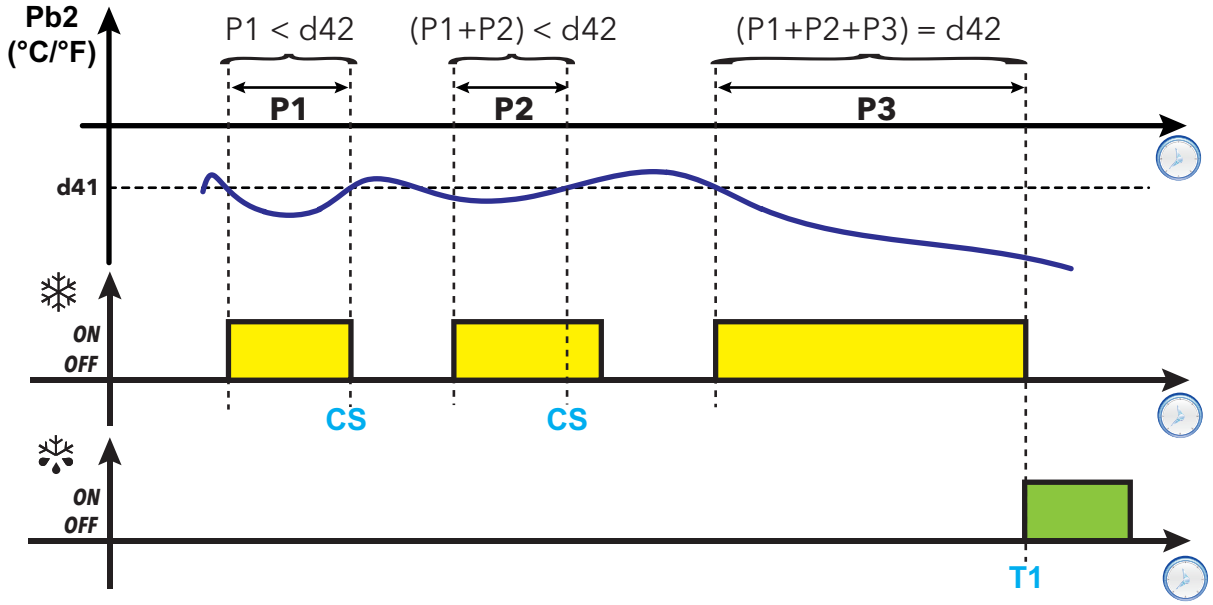

d44 = 1: Threshold in relative value

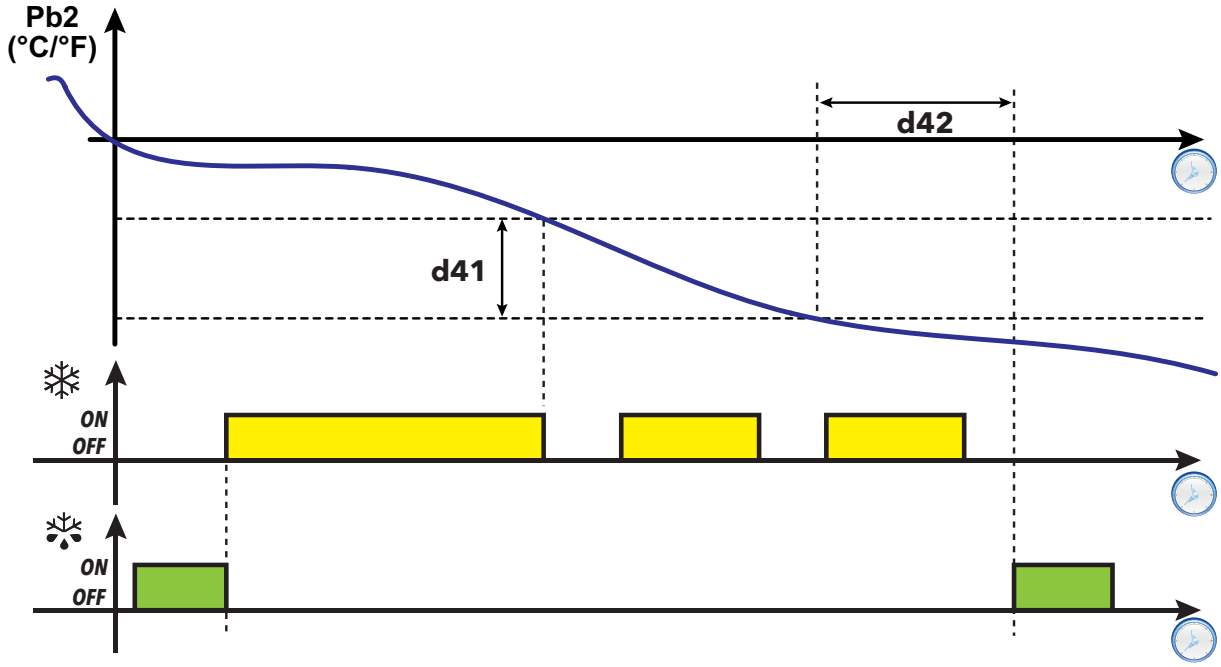

Legend: **T1** = Defrost request; **CS** = Count stop (Pb2 > **d41**)

Defrost Modulating: RTC (Real Time Clock)

This defrost can be configured via the following parameters:

Parameter	Description
d90	Sets the defrost mode with RTC. • **0** = Mode disabled • **1** = Reserved • **2** = RTC at fixed intervals (**d91**) • **3** = Regular RTC
d91	Sets the number of daily defrosts (only if **d90** = 2)
d92	Sets the first weekend/holiday day. • **0** = Sunday • **1** = Monday • **2** = Tuesday • **3** = Wednesday • **4** = Thursday • **5** = Friday • **6** = Saturday • **7** = Disabled
d93	Sets the second weekend/holiday day. Same as **d92**
d94	Sets the interval (duration) of the regular defrost expressed in days

Note: this function can only be activated in models with RTC (as long as the conditions are correct to do so).

RTC operation at fixed intervals

If RTC at fixed intervals mode is selected (**d90**=2), the first defrost starts with the first programmed defrost time (holiday / weekday). The next defrost begins at fixed intervals: the time between two defrosts (expressed in hours) is calculated with the formula 24 h/**d91** (example: if **d91**=6, defrost begins every 4 hours after the first).

The defrost events are described via parameters:

- **d1H** (weekday start hour)
- **d1n** (weekday start minute)
- **F1H** (weekend/holiday start hour)
- **F1n** (weekend/holiday start minute).

Regular RTC operation

If regular interval RTC is selected (**d90**=3), the first defrost begins at the time programmed using parameters **d1H**, **d1n** (**F1H** and **F1n** are not taken into account).

After **d94** days from the first defrost, at the time **d1H** & **d1n**, a new defrost begins. After **d94** days from the second defrost, at the time **d1H** & **d1n**, a new defrost begins and so on.

Note: No distinction is made between weekdays and weekends/holidays.

Regulation diagrams

1) Example of defrost at fixed intervals during the week (Monday...Friday)

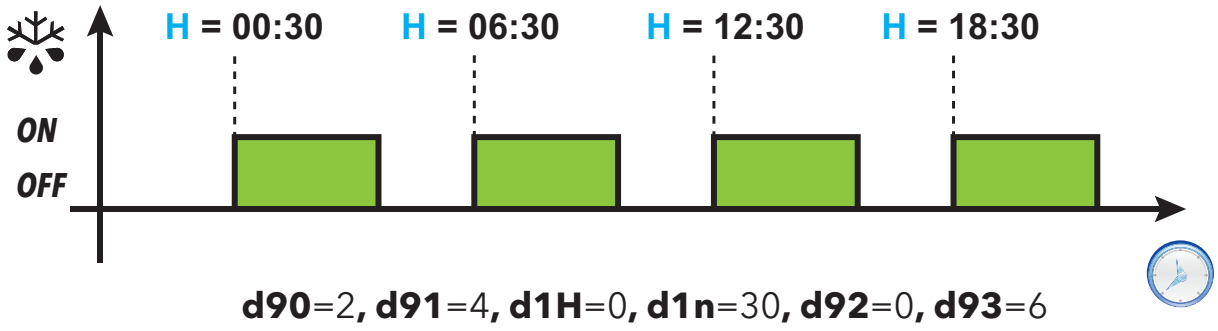

d90=2, **d91**=4, **d1H**=0, **d1n**=30, **d92**=0, **d93**=6

2) Example of defrost at fixed intervals on weekends/holiday (Saturday/Sunday)

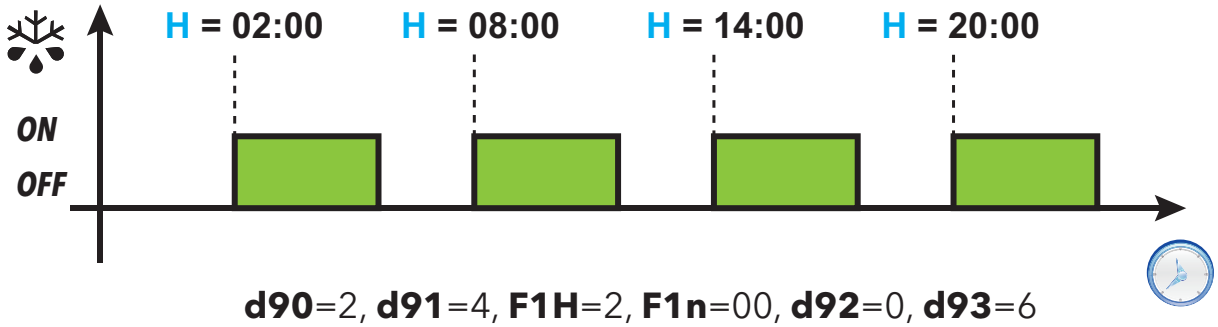

d90=2, **d91**=4, **F1H**=2, **F1n**=00, **d92**=0, **d93**=6

3) Example of defrost at regular intervals (Sunday switch-on)

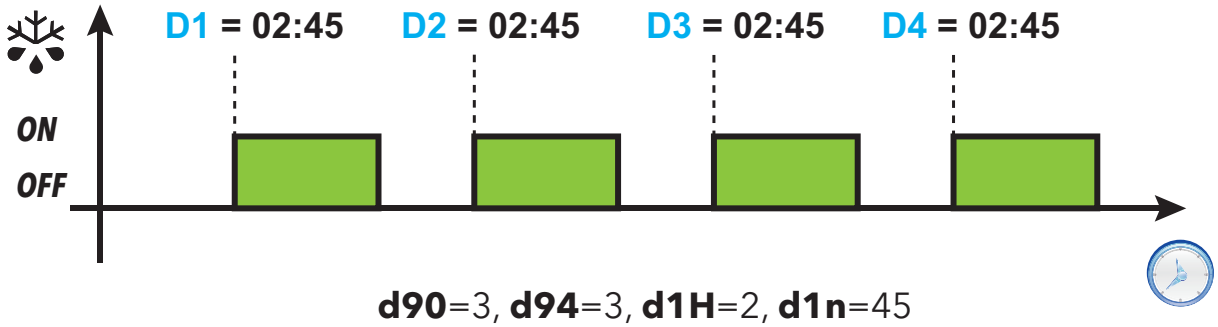

d90=3, **d94**=3, **d1H**=2, **d1n**=45

Legend:

- **H** = Defrost start time;
- **Dx** = day of the week (in the example the instrument is switched on on Sunday, so: **D1**=Sunday;**D2**=Wednesday;**D3**=Saturday;**D4**=Tuesday).

Standard defrost

To select this defrost mode, set parameter **dtY** (defrost type).

Defrost takes place due to the evaporator heating up, in one of the following ways:

dtY value	Defrost mode
0	Electric defrost. The electric defrost operating modes are: • Electric heater defrost • Defrost due to compressor stoppage
1	Cycle inversion (hot gas) defrost*
2	Free defrost*

(*): only models that manage probe Pb2.

Electric heater defrost

When defrost is activated (**dty** = 0):

- The compressor stops
- the relay to which the electric heaters are connected, configured as defrost regulator output, is activated

At the end of defrost, the heaters switch off and the compressor remains inactive for the dripping time set in parameter **dt** (if a value other than zero). At the end of the dripping time, temperature control begins again as normal.

End of defrost

Defrost ends in the following conditions:

Condition	Evaporator probe (Pb2)	H42 value
End of timeout period set using parameter **dEt**.	Not managed	0
Defrost end setpoint set using parameter **dS1** reached or due to timeout if the setpoint is not reached within the time period **dEt**.	Managed	1

Notes:

- To end defrost manually, switch the controller off and on again or use the ON/OFF function (Stand-by)
- If **dS1** intervenes before **dEt**, dripping (managed by parameters **dt** and **Fdt**) is activated in correspondence with **dS1**
- If **Fdt** < **dt** **Fdt** = **dt** is set
- During the defrost the fans are off if **dFd** = y, otherwise they follow the other settings for the fan regulator

Regulation diagram

End of electric heater defrost due to timeout

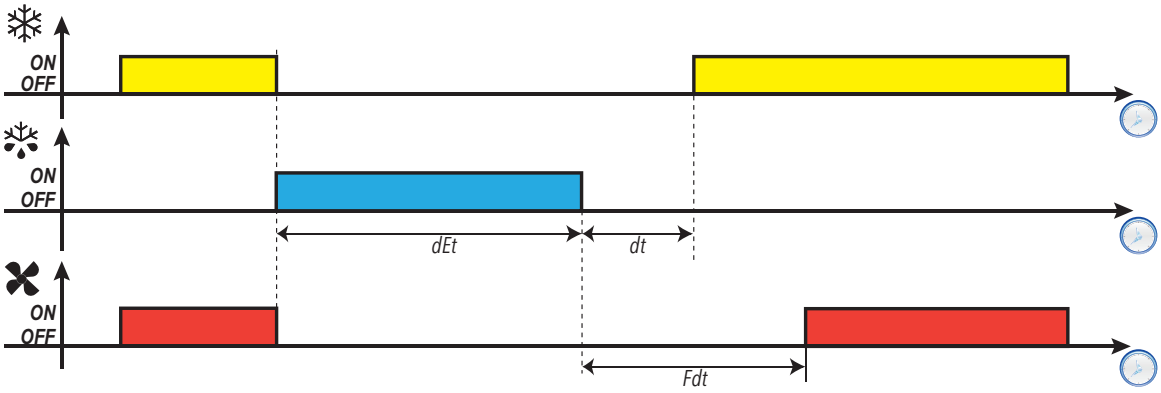

End of electric heater defrost due to temperature

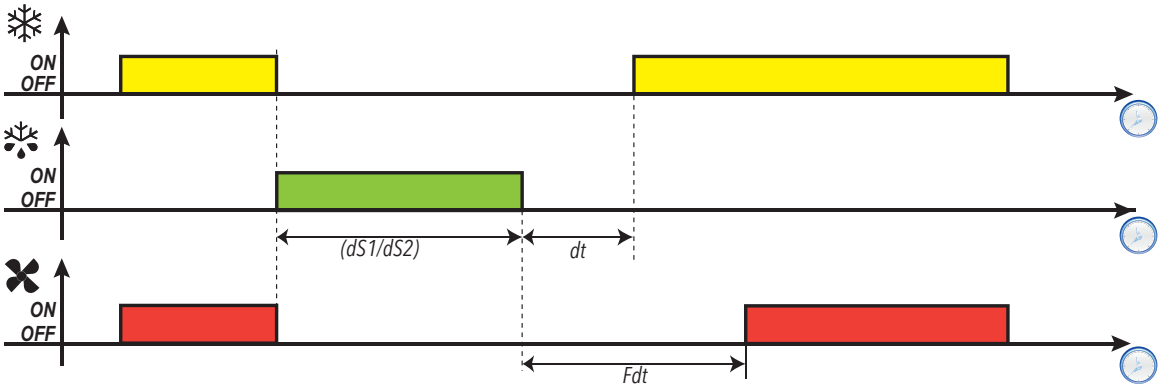

Parameters

Parameter	Description
dOn	Compressor relay activation delay time from call.
dOF	Delay time after compressor relay switch-off and the next switch-on.
dbi	Delay time between two compressor switch-ons.
dty	Type of defrost.
dEt	Defrost timeout. Determines the maximum duration of the defrost.
dS1	Evaporator 1 defrost end temperature.
d40	Enables/disables use of probe Pb2.
Fdt	Fan activation delay after a defrost.
dt	Dripping duration.

Defrost due to compressor stoppage

When defrost is activated (**dty** = 0),

- The compressor stops
- No relay is configured as defrost regulator output

End of defrost

Defrost ends in the following conditions:

Condition	Evaporator probe (Pb2)	H42 value
End of timeout period set using parameter **dEt**.	Not managed	0
Defrost end setpoint set using parameter **dS1** reached or due to timeout if the setpoint is not reached within the time period **dEt**.	Managed	1

Notes:

- To end defrost manually, you need to switch the controller off and on again or press ⏻ for at least 5 seconds in order to activate Stand-by
- If **dt** ≠ 0, at the end of defrost the compressor and fans remain off for the time period **dt** (dripping time)

Regulation diagram

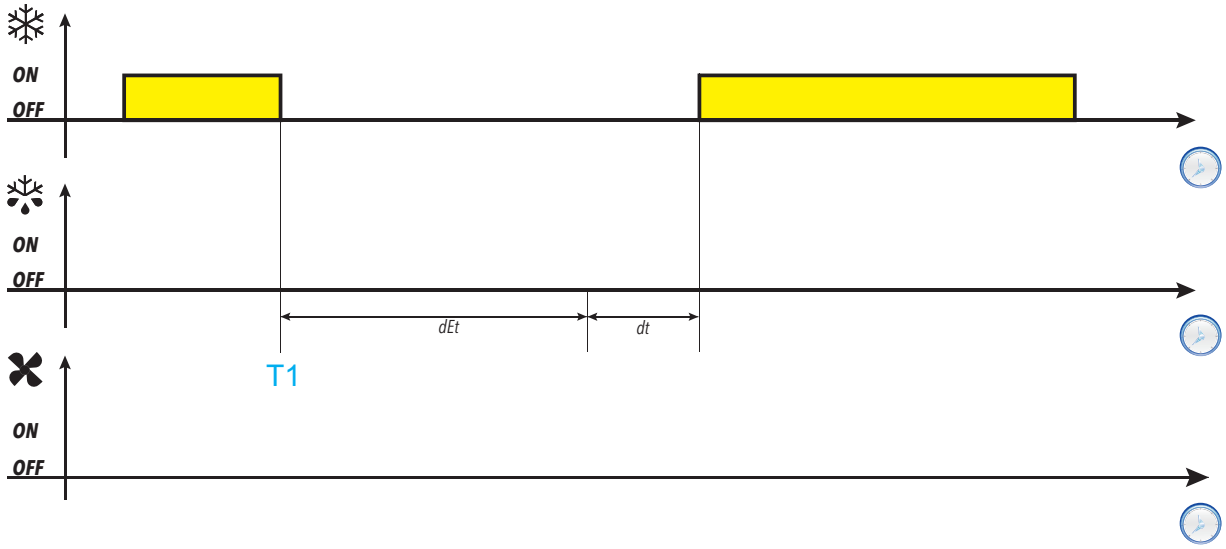

Legend: **T1** = Start of defrost

Parameters

Parameter	Description
dty	Type of defrost.
dEt	Defrost timeout. Determines the maximum duration of the defrost.
dt	Dripping duration.

Cycle inversion (hot gas) defrost

When defrost is activated (**dty** = 1):

- The compressor remains active for the entire duration of the defrost
- the relay to which the solenoid valve is connected, configured as defrost regulator output, is activated

At the end of defrost the valve relay and the compressor relay are deactivated. The compressor relay is stopped for the entire duration of the dripping cycle, set via parameter **dt** (if a value other than zero). At the end of the dripping cycle, temperature control begins again as normal.

End of defrost

Defrost ends in the following conditions:

Condition	Evaporator probe (Pb2)	H42 value
End of timeout period set using parameter **dEt**	Not managed	0
Defrost end setpoint set using parameter **dS1** reached or due to timeout if the setpoint is not reached within the time period **dEt**.	Managed	1

Notes:

- To end defrost manually, switch the controller off and on again or use the ON/OFF function (Stand-by).
- The compressor safety timings (managed by parameters **dOn**, **dOF** and **dbi**) take priority over defrost
- If **dS1** intervenes before **dEt**, dripping (managed by parameters **dt** and **Fdt**) is activated in correspondence with **dS1**
- If **Fdt** < **dt** **Fdt** = **dt** is set
- During the defrost the fans are off if **dFd** = y, otherwise they follow the other settings for the fan regulator

Regulation diagrams

End of hot gas defrost due to timeout, with tcd > 0

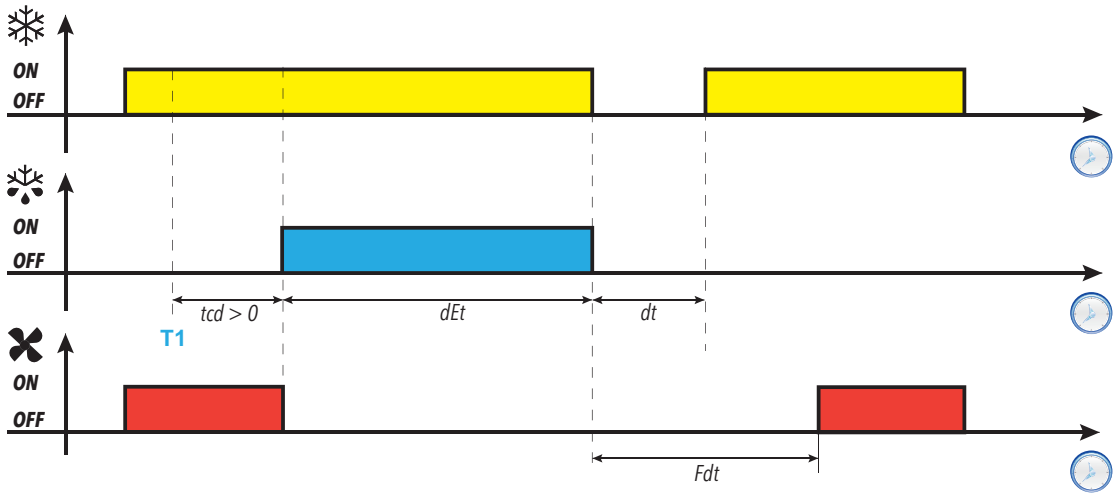

End of hot gas defrost due to temperature, with tcd > 0

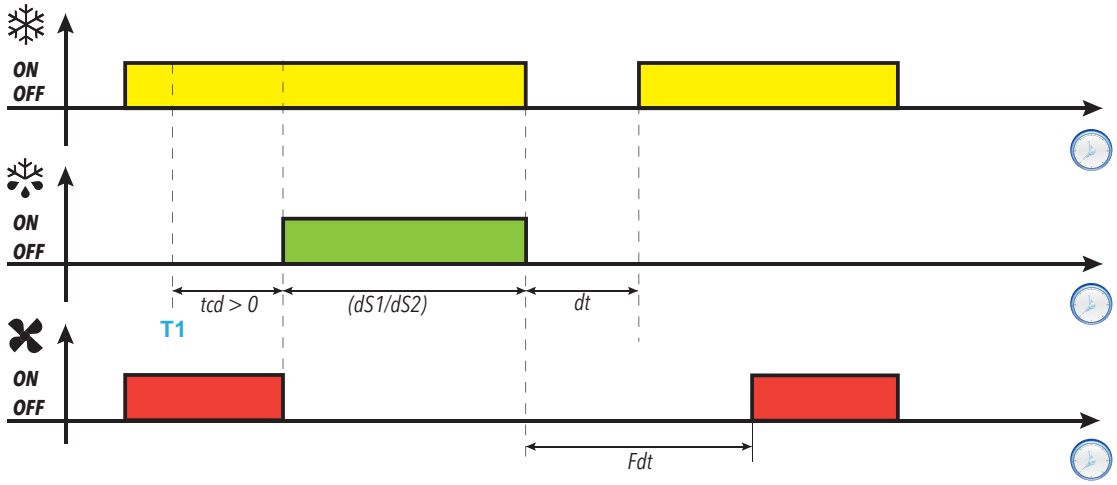

End of hot gas defrost due to timeout, with tcd < 0

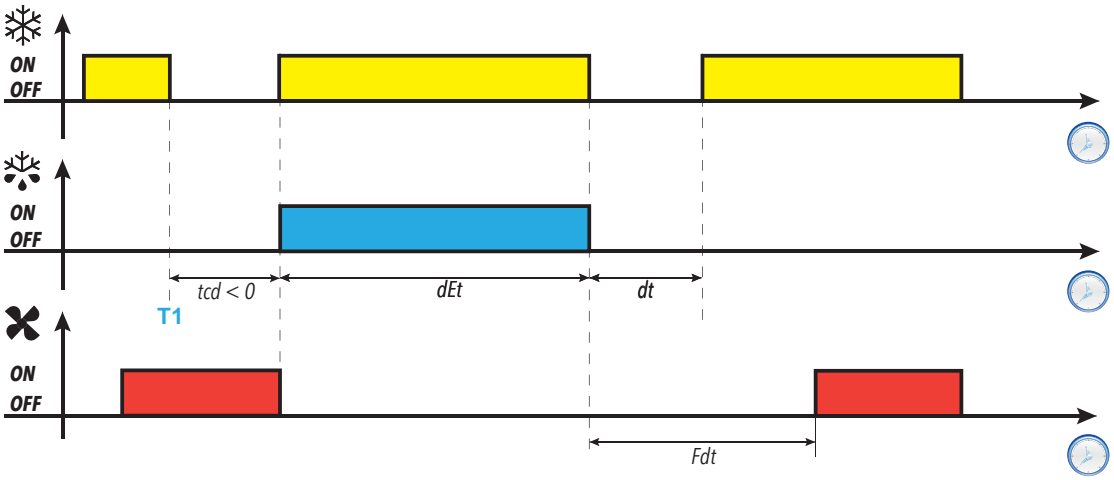

End of hot gas defrost due to temperature, with tcd < 0

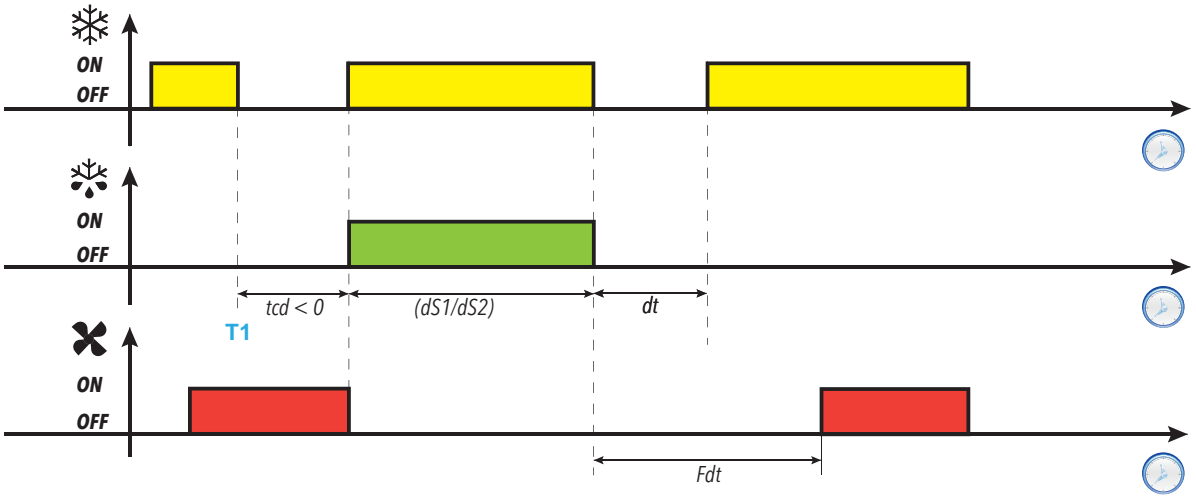

Legend: **T1** = Defrost request

Parameters

Parameter	Description
dOn	Compressor relay activation delay time from call.
dOF	Delay time after compressor relay switch-off and the next switch-on.
dbi	Delay time between two compressor switch-ons.
tcd	Minimum compressor on or off time which must elapse before defrost is activated.
dty	Type of defrost.
dEt	Defrost timeout. Determines the maximum duration of the defrost.
dS1	Evaporator 1 defrost end temperature.
Fdt	Fan activation delay after a defrost.
dt	Dripping duration.

Free defrost

When defrost is activated (**dty** = 2):

- The compressor remains under control of the compressor regulator for the duration of the defrost
- the relay to which the electric heaters are connected, configured as defrost regulator output, is activated

At the end of the defrost the heaters switch off.
During the dripping cycle the compressor continues to run.

End of defrost

Defrost ends in the following conditions:

Condition	Evaporator probe (Pb2)	H42 value
End of timeout period set using parameter **dEt**	Not managed	0
End of defrost temperature setpoint, set using parameter **dS1**, reached. **Note**: (only models that manage probe Pb2) If the setpoint is not reached within the time set using parameter **dEt** (defrost timeout), the defrost ends in any case due to timeout.	Managed	1

Notes:

- To end defrost manually, switch the controller off and on again or use the ON/OFF function (Stand-by).
- Temperature alarms are excluded during defrost
- If **dS1** intervenes before **dEt**, dripping (managed by parameters **dt** and **Fdt**) is nevertheless activated in correspondence with the end of interval **dS1**
- If regulation probe Pb1 is in error but defrost is programmed, it will be carried out anyway
- If the door switch input is activated during defrost, there is no effect on defrost and dripping

Parameters

Parameter	Description
dty	Type of defrost.
dEt	Defrost timeout. Determines the maximum duration of the defrost.
dS1	Evaporator 1 defrost end temperature.
Fdt	Fan activation delay after a defrost.
dt	Dripping duration.

Dual evaporator defrost

Introduction

To activate this function:

- Configure a relay output as a second evaporator using parameter **H2x** = 10
- Configure the type of dual defrost management using parameter **H45**
- Configure probe Pb3 as a second evaporator: **H11** = 0 and **H43** = 2EP.

Note: this function is only present in models that manage probes Pb2 and Pb3.

Functioning conditions

Defrost in dual evaporator mode can be carried out in 3 different ways:

H45 value	Description
0	Defrost on Evaporator 1 is active and ensures that the temperature read by probe Pb2 is lower than the defrost end temperature **dS1**. **Note**: The second evaporator is not taken into account.
1	Defrost is active and ensures that at least one of the temperatures read by probes Pb2 and Pb3 is lower than the defrost end temperature **dS1** for Evaporator 1 and **dS2** for Evaporator 2.
2	Defrost is active and ensures that both of the temperatures read by probes Pb2 and Pb3 are lower than the respective defrost end temperatures **dS1** for Evaporator 1 and **dS2** for Evaporator 2.
3	Defrost is activated on Evaporator 1 and Evaporator 2 alternately.

If one of the probes is in error, its temperature is considered as a trigger for the defrost function.

End of defrost

The end of defrost occurs when the temperature read by both evaporator probes is above the end unlock temperature (**dS1** and **dS2**) or when a timeout takes place.

General notes

- Defrost is not carried out if the conditions are not right to do so
- If **H45** = 3, the defrost sequence is always: Evaporator 1, Evaporator 2, Evaporator 1, and so on
- The end of defrost with Evaporator 1 only occurs when the probe measures a value that is equal to or greater than the defrost end temperature or when a timeout takes place
- Dripping begins when both defrosts have ended. If **H45** = 3, dripping will begin at the end of each defrost.
- If one or both probes are in error, the defrost will end due to timeout **dEt**
- If Pb3 is not configured as an Evaporator 2 probe (**H43** ≠ 2EP) or it is in error, the Evaporator 2 defrost can only be carried out if a digital output is configured as Evaporator 2 defrost (**H2x** = 10). In this case the temperature is not checked and the defrost ends due to timeout **dEt**
- Fan regulation follows normal operation in the same way as when a single evaporator is managed

Operation

Function	Start of defrost	End of defrost
Defrost on Evaporator 1	• Pb2<**dS1** if **H45**=0 • Pb2<**dS1** if **H45**=1 • Pb2<**dS1** & Pb3<**dS2*** if **H45**=2	• Pb2>**dS1** or • Timeout if Pb2<**dS1** or • Timeout if Pb2 in error
Defrost on Evaporator 2	• Pb2<**dS1** if **H45**=0: • Pb3<**dS2** if **H45**=1: • Pb2<**dS1** & Pb3<**dS2*** if **H45**=2	• Pb3>**dS2** or • Timeout if Pb3<**dS2** or • Timeout if Pb3 in error or • Timeout if **H43** ≠ 2EP
Function	**Start of dripping**	**End of dripping**
Dripping	• If **H45** ≠ 3: it is activated when both evaporators have finished defrosting. • If **H45** = 3: it is activated on the evaporator that was active when it finishes defrosting.	As for defrost with single evaporator

(*): If Pb3 is in error or **H43** ≠ 2EP and a digital output is configured as Evaporator 2, the condition Pb3<**dS2** will be considered as satisfied.

Parameters

Parameter	Description
dOn	Compressor relay activation delay time from call.
dOF	Delay time after compressor relay switch-off and the next switch-on.
dbi	Delay time between two compressor switch-ons.
dty	Type of defrost.
dEt	Defrost timeout. Determines the maximum duration of the defrost.
dS1	Evaporator 1 defrost end temperature.
dS2	Evaporator 2 defrost end temperature.
Fdt	Fan activation delay after a defrost.
dt	Dripping duration.

Tools

Contents

This section includes the following topics:

Door switch 78
Stand-by 79
Copy parameters (UNICARD) 80

Door switch

Description

By setting **H11** = ±4 it is possible to connect a door switch to the digital input. When it is activated, the compressor and/or fans are deactivated instantly or after a time period set with parameter **dCO**.

By setting **H2x** = 5, an AUX relay output can be associated with the door switch regulator output.

Operating mode

Controller operation on opening of the door switch depends on parameters **dOd**, **dAd** and **dCO**:

dOd	dCO	Fans	Compressor
0 = function disabled	---	On	On
1 = fans disabled	---	Off	On
2 = compressor disabled	0	On	Off
	> 0	On	Off after **dCO** time
3 = compressor and fans disabled	0	Off	Off
	> 0	Off	Off after **dCO** time

Note: If the door is opened during a defrost cycle, the defrost continues normally.

Parameters

Parameter	Description
dOd	Utilities switched off upon activation of the digital input set for the door switch.
dAd	Digital input activation delay.
dCO	Compressor switch-off delay from door switch.
OAO	Alarm signaling delay after deactivation of the digital input (door closure).
tdO	Delay time due to door open alarm.
AuP	Association of an AUX output when the door is open.
H11	Digital input 1/polarity configuration.

Stand-by

Description

The stand-by function maintains the controller power supply and, depending on the value of parameter **H08**:

- switches off the display or shows **oFF**
- deactivates all regulators (or not)
- excludes alarms (or not)

Activation

The stand-by function can be activated in one of the following ways:

- press and hold a key with **H3x** = 4 (with **x** = 1, 2, 3, 4 or 5)
- digital input (DI) (only if **H11** = ±6)
- using a Supervisor, via Modbus command (serial)
- via APP (if the BTLE Dongle is fitted. See accessories section)

Note: the digital input takes priority over the key. If both are configured, the key command will be excluded.

Operation

When the stand-by function is activated, depending on the setting for **H08**, the following will occur:

- **H08** = **0**: display off, the regulators remain active and the instrument can activate the alarm icon ⚠ when an alarm occurs
- **H08** = **1**: display off, all relays are de-energized and the alarms deactivated
- **H08** = **2**: the display shows the text **oFF**, all relays are de-energized and the alarms deactivated

On exiting stand-by function, the temperature alarm is excluded for the time period set with parameter **PAO**; the outputs are deactivated for the time period set with parameter **OdO**. The meters for parameters **PAO** and **OdO** are reset every time the controller is switched off.

If stand-by had been active when the controller was switched off (both as the result of a blackout and voluntarily), it will also be active the next time it is switched on.

Parameters

Parameter	Description
PAO	Alarm exclusion at startup
OdO	Output activation delay after startup
H08	Stand-by operating mode
H11	Digital input 1/polarity configuration.
H31	△ key configuration.
H32	▽ key configuration.
H33	⏻ key configuration.
H34	💡 key configuration.
H35	☆ key configuration.

Copy parameters (UNICARD)

Introduction

The UNICARD connects to the TTL serial port and allows uploading/downloading of a parameters map.

Note: Format the UNICARD the first time it is used.

The UNICARD:

- Can be connected directly to a computer by means of a USB port.
- If powered by a USB power supply device, it can power **IDNext -HC** during the upload/download phases.

Formatting the UNICARD

1. Access the installer parameters, entering the **PA2** password if enabled.
2. Scroll through the folders with ∧ and ∨ until you find the folder **FPr**.
3. Press **SET** to confirm.
4. Scroll through the parameters using ∧ and ∨ until you see parameter **Fr** and press **SET**: if the operation is a success, the display will show **yES**, otherwise it will show **no**.

Uploading parameters from the controller to the UNICARD

1. Access the installer parameters, entering the **PA2** password if enabled.
2. Scroll through the folders with ∧ and ∨ until you find the folder **FPr**.
3. Press **SET** to confirm
4. Scroll through the parameters using ∧ and ∨ until you see parameter **UL** and press **SET** to confirm
5. If the operation is completed, the display will show **yES**, otherwise it will show **no**.

Downloading parameters from the UNICARD to the controller

Connect the UNICARD when the controller is switched off. When the controller is switched on, the data is downloaded automatically from the UNICARD to the controller. After the lamp test, the display shows **dLy** if the operation was successful, otherwise it will show **dLn**.

Note: after downloading the data, the instrument will work with the settings for the loaded map straight away.

Regulators

Contents

This section includes the following topics:

Heat/Cool 82
Compressor 83
Managing the compressor with the probe in error 86
Variable-speed compressor 87
Activating the Auto-tuning function for the PID regulator 89
Dual compressor 90
Deep cooling cycle (DCC) 91
Evaporator Fans 92
Condenser Fans 95
Pressure switch 98
Auxiliary Output 100
Light output 101
Deadband 102
Night/Day 103
Energy Saving - Reduced Set 105

Heat/Cool

Description

The Heat/Cool regulator can work with an absolute or relative differential, both in Heat and Cool modes, and is driven by probe Pb1, Pb2 or Pb3.

Operating conditions

Before activating the compressor, the regulator makes sure of the following conditions:

- The controller is on or in stand-by (in the latter case, only applies if **H08** = 0)
- Regulation probe Pb1 is not in error (alarm **E1** is not present)
- The time set using parameter **OdO** has elapsed (only if **OdO**≠0)
- There are no active defrosts (depending on the defrost type)

If an offset is activated on the setpoint (**OSP**) and on the differential (**OdF**), then:

- **SEt** will be replaced by the value (**SEt + OSP**)
- **diF** will be replaced by the value (**diF+ OdF**)

Note: **OSP** can assume both positive and negative values.

Regulation diagrams

Cooling Regulation (**HC** = 0)

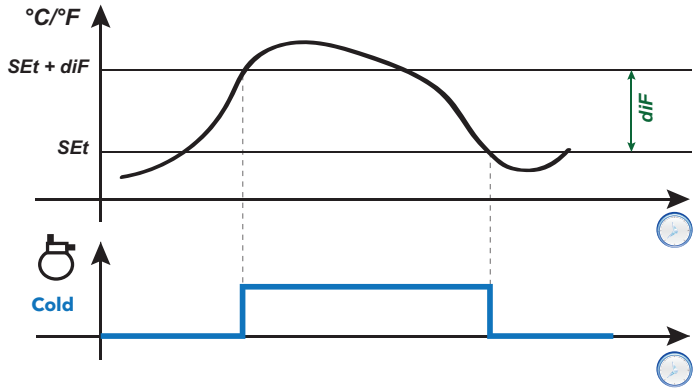

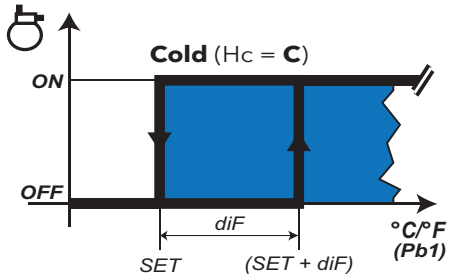

Heating Regulation (**HC** = 1)

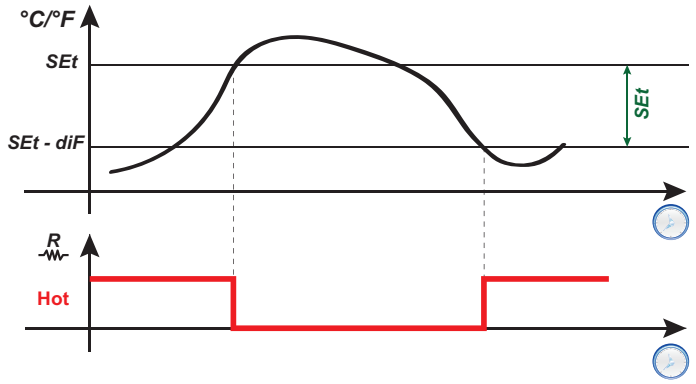

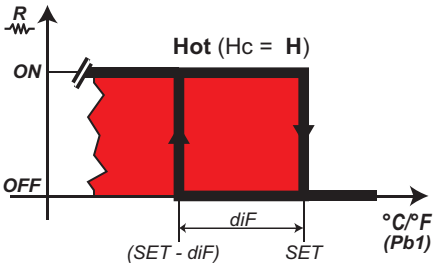

Legend: **Hot** = Heat; **Cold** = Cool.

Parameters

Parameter	Description
SEt	Regulation setpoint
diF	Regulator activation differential
HC	Select regulation mode (**H** = Heat / **C** = Cool)
OSP	Offset on setpoint
OdF	Offset on differential in energy saving mode

Compressor

Description

The compressor is controlled by a controller relay and switches on/off according to the following elements:

- the status of the temperatures detected by probe Pb1
- the temperature control functions set
- the defrost/dripping functions

For compressor-controller wiring diagrams, refer to the "Electrical Connections" section.

Note: digital output **Out1** is set as "Compressor" by default.

Functioning conditions

The regulator is activated if the following conditions occur:

- The controller is on or in stand-by (in the latter case, only applies if **H08** = 0)
- Regulation probe Pb1 is not in error (alarm **E1** is not present)
- The time set using parameter **OdO** has elapsed (only if **OdO**≠0)
- There are no active defrosts (depending on the defrost type)

The Compressor activation request at startup can be delayed by setting parameter **OdO**. During this period, the compressor remains off and, if an activation request is made, the compressor icon ❄ flashes.

Parameter **Cod** makes it possible to avoid regulator activation near a defrost cycle. Before activating the compressor, the controller checks whether the next defrost is scheduled after a time period that is less than the value of parameter **Cod**.

If the next defrost is scheduled after a time period...	Then the compressor...
less than the value of parameter **Cod**	it is not activated and the icon ❄ flashes.
greater than the value of parameter **Cod**	it is activated.

There is a fixed interval of one second between the request and the actuation of the linked relay.

Compressor protections

To avoid damaging the compressor, the following protections can be set up:

- a delay **doF** on reactivation of the compressor after the activation request ends. If a new activation request arises during the delay **doF**, the compressor icon will flash on the display.
- a delay **dbi** between one compressor startup and the next. The delay **dbi** is calculated from the previous compressor startup. If a request arises during the delay **dbi**, the compressor icon will flash on the display.
- a delay **don** for compressor startup after the request. During the delay **don**, the compressor icon will flash on the display
- a minimum delay **Cit** before the compressor switches off after the activation request ends.
- a maximum compressor running time **CAt**, even if the activation request has not ended and is normally associated with the delay **doF**. During the time period **doF** in which the compressor remains off, the compressor icon will flash on the display.

Regulation diagrams

Compressor activation delay from request

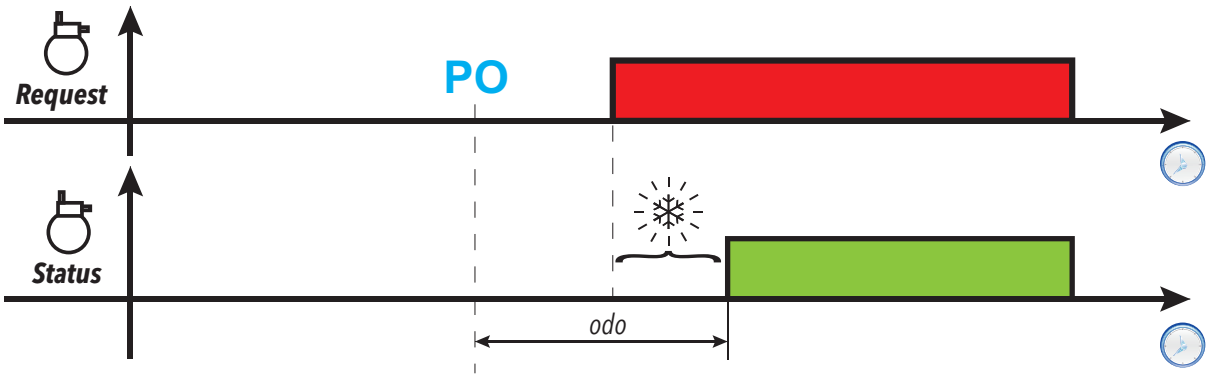

Compressor output activation delay from switch-off

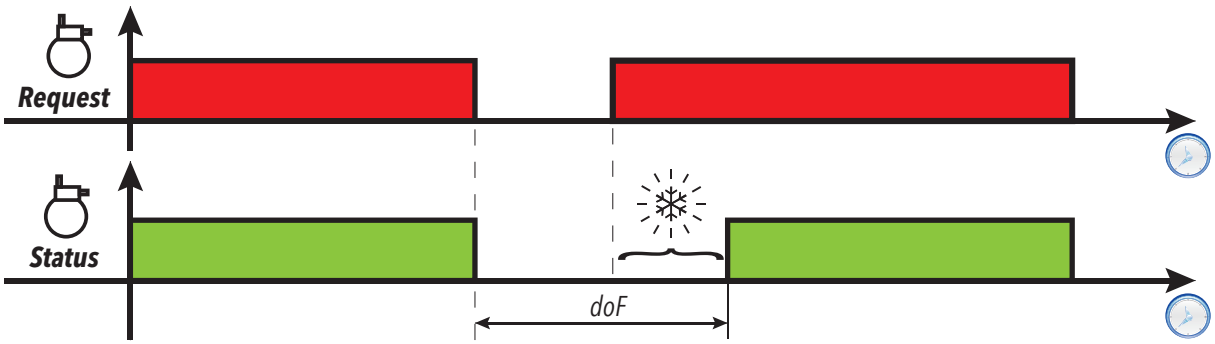

Delay between two consecutive compressor output activations

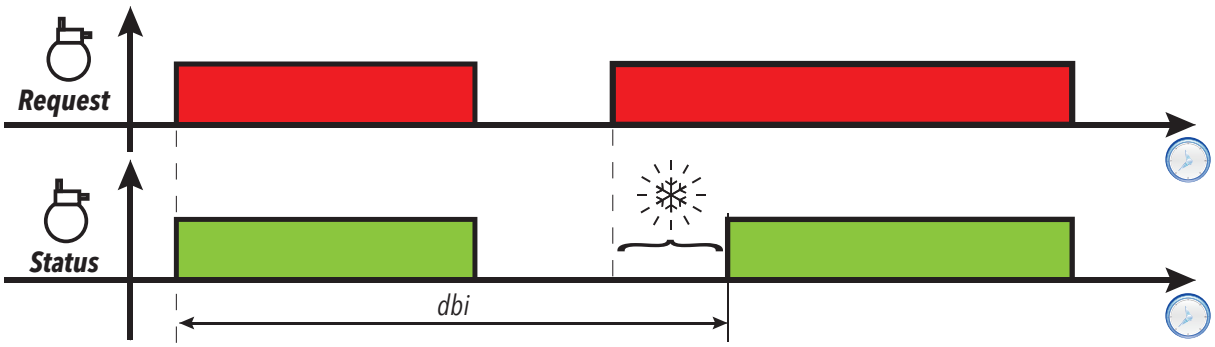

Compressor activation delay from request

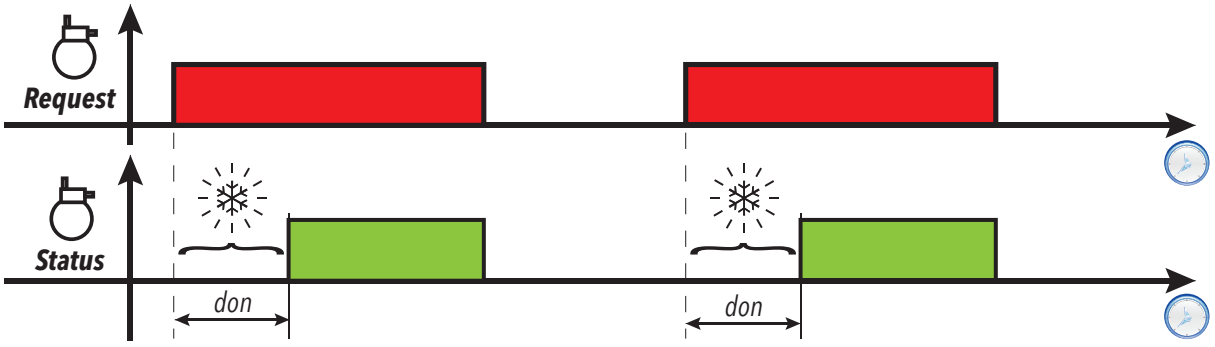

Minimum compressor output activation time

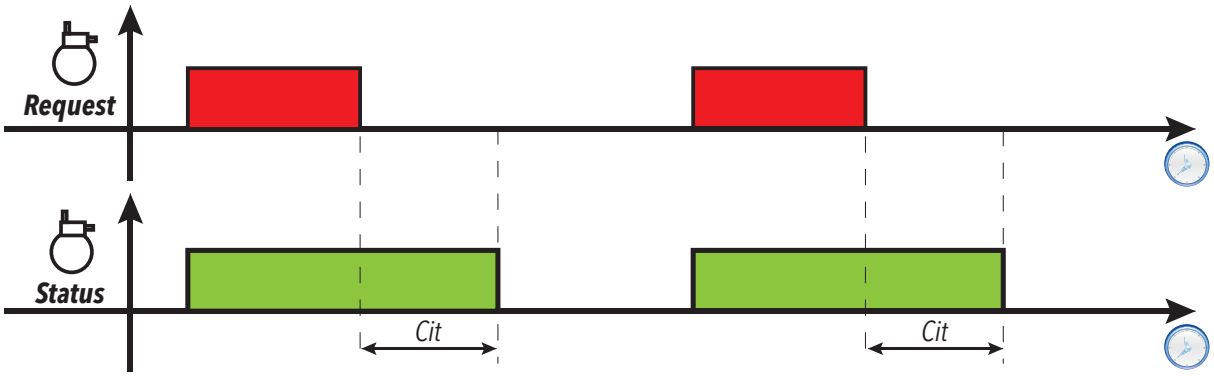

Maximum compressor output activation time

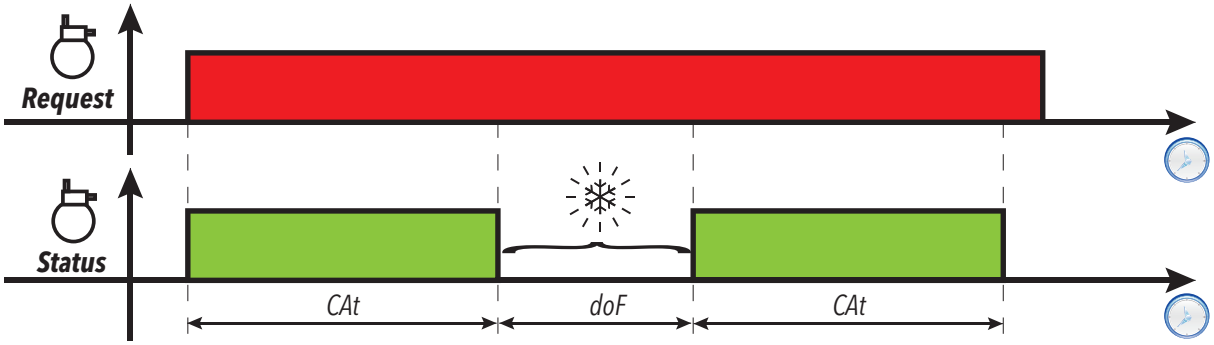

Legend: **PO** = Controller switch-on; ❄ = Compressor icon flashing; **Request** = Compressor activation request; **Status** = Compressor status (ON/OFF).

Parameters

Parameter	Description
don	Compressor relay activation delay from call
doF	Delay between compressor relay switch-off and the next switch-on
dbi	Delay between two subsequent compressor starts
Cit	Minimum compressor activation time
CAt	Maximum compressor activation time
odo	Output activation delay from startup
Cod	Time compressor remains off before a defrost

Managing the compressor with the probe in error

Description

The compressor relay operates in Duty cycle mode (according to parameters **Ont** and **Oft**) if:

- the cold room probe (Pb1) is in error and the display shows **E1** (see list of alarms)
- the cold room probe (Pb1) is not configured (**H42** = n).

The first time to consider is always **Ont**. If **Ont** >0 the compressor protections set using **dOn**, **dOF**, **dbi**, **Cit** and **Cat** still apply.

Note: parameter **OdO** inhibits activation of the relay outputs for its duration, with the exception of the alarm relay and the buzzer (if present).

Functioning conditions

Ont	OFt	Compressor output
0	0	off
0	>0	off
>0	0	active
>0	>0	Duty cycle, regardless of the probe values (cold room probe not working) and requests from other utilities

Note: if the cold room probe (Pb1) is functioning, Duty cycle mode is not active and conventional regulation is activated (see compressor section).

Note: when the probe is restored (connected/replaced), normal regulation starts up again.

Regulation diagram

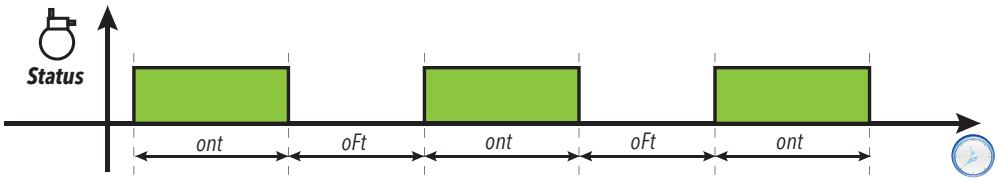

Parameters

Parameter	Description
ont	Compressor output ON time if probe Pb1 is not functioning
oFt	Compressor output OFF time if probe Pb1 is not functioning
don	Compressor relay activation delay from call
doF	Delay between compressor relay switch-off and the next switch-on
dbi	Delay between two subsequent compressor starts
Cit	Minimum compressor activation time
CAt	Maximum compressor activation time
odo	Output activation delay after startup

Variable-speed compressor

Description

The VSC (Variable Speed Control) regulator can only be activated on models equipped with the output **OC1**, by setting parameter **H21** = 13.

This regulator can be used to manage a variable-speed compressor via the PFM Open Collector output. This output drives an inverter and can be used to regulate the ability of the compressor to cool a system (e.g. a refrigerated display unit, a room, etc.) while keeping the temperature close to the setpoint value **SEt**. The algorithm generates an outgoing value between 0.0...100% and converts it proportionally into **rpm**.

The maximum frequency **F_1** and minimum frequency **F_2** values can be set via parameter within the range 0...250 Hz; these values correspond to **rpm** compressor values.

The control algorithm is a PID algorithm that can be set using the auto-tuning function.

There are also special functions that can be customized for:

- "pull down" or "pull up" systems at startup or at the end of defrost
- requests relating to inverter compressors
- functions for managing overload conditions, etc.

Note: After the initial startup, and every time it becomes necessary, a new auto-tuning cycle can be started (see IT_Reg_ManualAutotuning).

Note: Whenever sudden load variations occur, a series of parameters speed up regulation around the setpoint during normal operating conditions ("pull-up" or "pull-down" procedures).

Operating conditions

During startup / switch-off, the compressor is subjected to delays and protections that can be selected via parameters **dOn**, **dOF**, **dbi**, **Cit**, **CAt** and **OdO**. If the regulation probe is in error or is not configured, the set capacity is equal to **CEr** and the values of parameters **ont** and **oFt** are not taken into account.

At controller startup and in general after a Stand-by/stop condition, a compressor capacity of **CSC** is set for a time period **CSd**. After the startup sequence, the compressor capacity will be set to 100% (pull-down) until the temperature **SEt** + **PdE** is reached.

At the end of a "pull-down" sequence, a capacity value of **CPd** (day mode) or **CPn** (night mode) should be set. The PID regulator begins regulating, starting from this value.

When the controller is set to regulate cooling and the value read by Pb1 is greater than **SEt** + **PdS** or less than **SEt** + **PUS**, a countdown of **PUd** begins. When the time has elapsed, an optimized pull-up / pull-down procedure is started in line with the temperature value.

Note: If the temperature falls within the limits indicated above before the **PUd** time has elapsed, the timer is reloaded.

Pull-down/pull-up operation:

- **Pull-Down**: when an optimized pull-down is activated, the compressor capacity is forced to the value **Pdd** for a time period **Pdt**. When the time period **Pdt** has elapsed, the capacity should be forced to 100% until the temperature reaches the value (**SP1** + **PdE**).
- **Pull-Up**: when a pull-up is activated, the compressor is switched off until the temperature reaches the value **SP1** + **PUE**.

When the "pull-down"/"pull-up" cycle has ended, the controller begins regulation again, setting a capacity equal to the last value set before the cycle was activated.

During normal regulation (for example, when the "pull-down"/"pull-up" cycles are not active), the compressor can be set to a fixed capacity value by setting **CAU** = 1 ("FiH") and setting the value using parameter **CdU** (%).

If **CAU** = 0 (“Aut”), **CdU** will represent the maximum capacity that the regulator can request. Also in this case, when the compressor is activated for a period of time equal to **CSd**, a compressor capacity of **CSC** will be set.

Regulation diagram

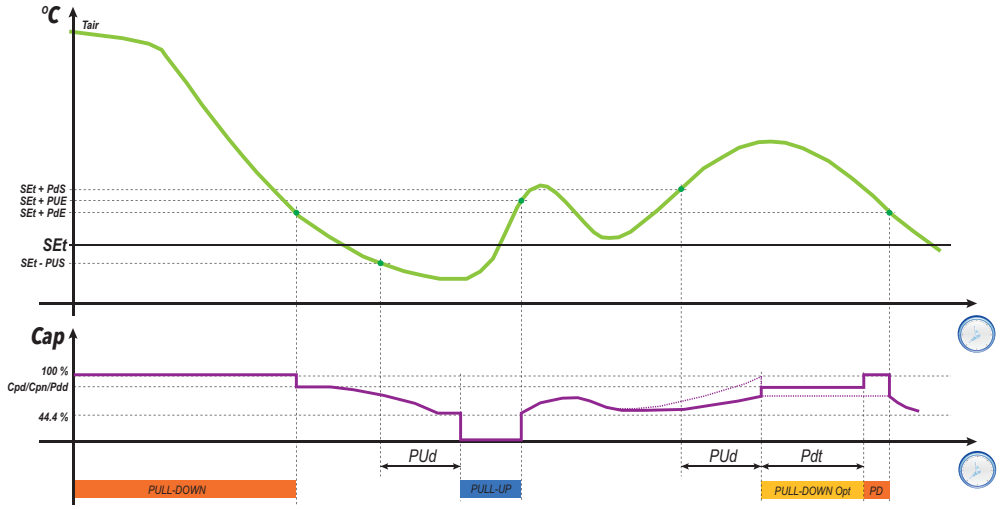

Legend: **Tair** = Value read by regulation probe Pb1; **Cap** = Compressor capacity value; **Pull-Down Opt** = Optimized pull-down; **PD** = Pull-down cycle.

Parameters

Parameter	Description
don	Compressor relay activation delay from call
doF	Delay between compressor relay switch-off and the next switch-on
dbi	Delay between two subsequent compressor starts
Cit	Minimum compressor activation time
CAt	Maximum compressor activation time
odo	Output activation delay from startup
CEr	Controlled capacity value in the event of regulation probe error
PdS	Differential for forced activation of a pull-down
PUS	Differential for forced activation of a pull-up
PUd	Temperature outside range timeout
PdE	Pull-down end differential
PUE	Pull-up end differential
Pdt	Optimized pull-down timeout
Pdd	Controlled capacity value, if a pull-down is activated, when the time period **PUd** has elapsed
CPd	Controlled capacity after a pull-down in day mode
CPn	Controlled capacity after a pull-down in night mode
CPb	PID regulator proportional band
Cti	PID integral time
Ctd	PID derivative time
CSd	Duration of constant-speed compressor heating **CSC** on startup or after a stand-by
CSC	Fixed compressor capacity for a time period **CSd** on startup or after a stand-by
CAU	Select automatic or manual PID mode
CdU	PID duty cycle in manual mode
F_1	Maximum compressor operation frequency
F_2	Minimum compressor operation frequency

Activating the Auto-tuning function for the PID regulator

Description

Auto-tuning can be activated manually in 2 ways using the functions in the folder **FnC** for the table "Installer parameters":

- **nPL** = calculates the preliminary values to assign to the parameters in order to make the system run.
- **tun** = calculates the value of the parameters precisely.

"nPL" procedure

When this procedure is activated, the preliminary values for managing the variable-speed compressor parameters.

Typically this procedure is activated when the controller remains off for a long period of time and the regulator probe therefore has a value that is very different from the Setpoint.

Note: In most cases, this procedure is enough to achieve good regulator configuration.

The controller performs ON-OFF cycles, which it uses to determine the value of the parameters required for regulation.

"tun" procedure

When this procedure is activated, the optimized values for the PID regulator parameters are calculated.

Typically this function is used following execution of the function **nPL**.

At the end of the procedure, the values of the PID regulator parameters are updated.

Dual compressor

Description

If a digital output is set as compressor 2, the controller will manage 2 power steps. Activation of the second step is conditioned at the activation of the first step.
The first step follows all the rules of the main compressor regulator (delays, safety settings, behavior in the event of a probe error / missing probe).

Operating conditions

If activated, compressor 2 will use the same setpoint and differential as compressor 1. If offsets are applied to the setpoint and/or to the differential due to the energy saving function (or other conditions), the second compressor will also be influenced by these offsets.

Compressor 2 will be activated once the delay **CP2** has elapsed.

Regulation diagram

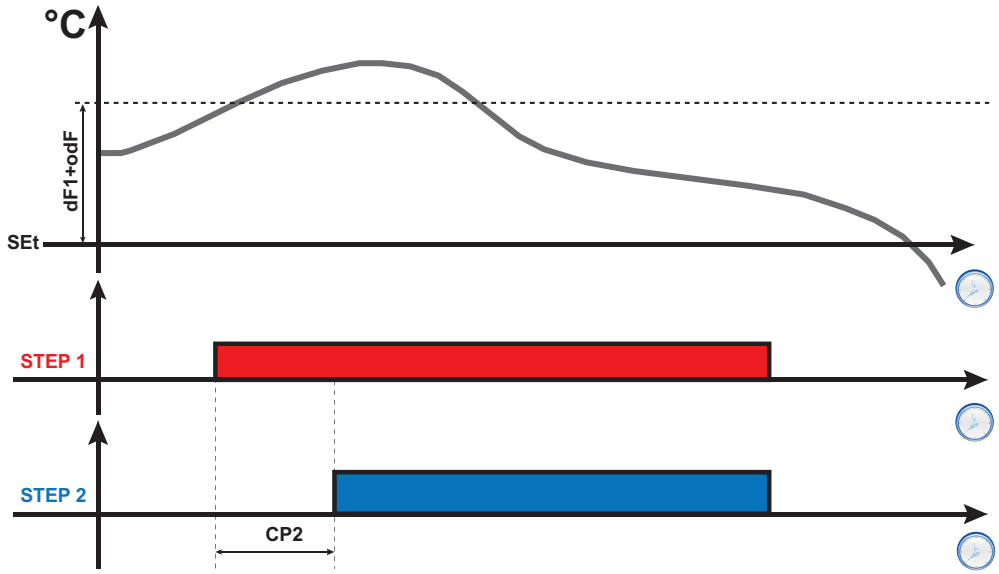

Deep cooling cycle (DCC)

Description

During the deep cooling cycle, the compressor runs with a setpoint equal to **dCS** and differential equal to **diF** for a maximum time period **tdc**.

Activation

A deep cooling cycle can be activated in one of the following ways:

- press and hold a key (configured with **H3x** = 7)
- digital input (**DI**) (only if **H11** = ±8)
- using a Supervisor, via Modbus command (serial)
- via APP (if the BTLE Dongle is fitted. See accessories section)

Deep cooling cycle and defrost

When a deep cooling cycle is activated, defrosts are disabled.
At the end of the deep cooling cycle, after a delay of **dcc**, a defrost is forced and the count for interval **dit** begins again.

Functioning conditions

The deep cooling cycle ends automatically and standard regulation is resumed if:

- There is a probe error (the display shows **E2**).
- A blackout occurs and the controller switches off and on again.

If parameters **dCS**, **tdc** and **dcc** are changed during the deep cooling cycle, cycle operation should be recalculated for the new set values.

Regulation diagram

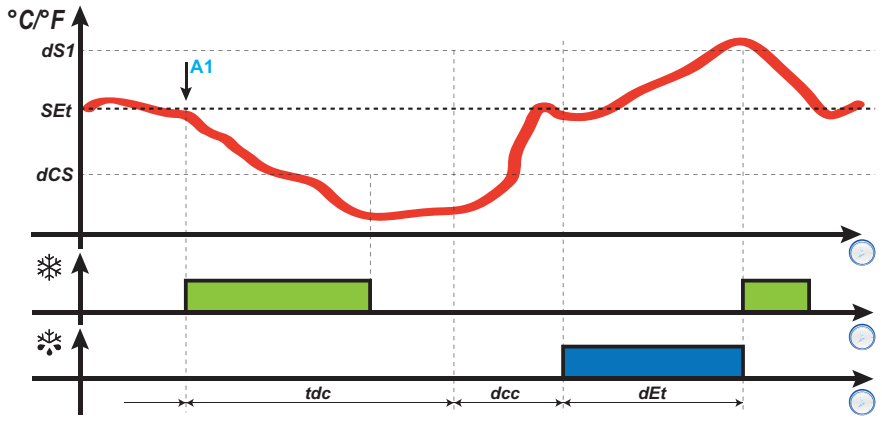

Legend: **A1** = DCC activation instant.

Alarm operation during the deep cooling cycle

During the deep cooling cycle, the temperature alarms are disabled. Normal management is re-established at the end of the cycle.

Parameters

Parameter	Description
dS1	End of defrost temperature (measured by probe Pb2).
dit	Interval between two consecutive defrosts
dEt	Defrost timeout. Determines the maximum duration of the defrost.
dCS	Deep cooling cycle setpoint
diF	Setpoint differential
tdc	Deep cooling cycle duration
dcc	Defrost activation delay after a "Deep Cooling Cycle"
H11	Digital input 1/polarity configuration
H31	△ key configuration.
H32	▽ key configuration.
H33	⏻ key configuration.
H34	💡 key configuration.
H35	☆ key configuration.

Evaporator Fans

Operating conditions

The evaporator fan regulator is activated if the following conditions occur:

- The time set using parameter **OdO** has elapsed (if **OdO** ≠ 0).
- The temperature read by the evaporator probe (Pb2) is lower than the value of parameter **FSt**.
- Parameter **dFd** is not excluded during the defrost (**dFd** = y).
- Dripping is not active (**dt**).
- Fan delay after defrost is not active (**Fdt**).

Note: this regulator is only present in models that manage probe Pb2.

Regulator activation

The request for fan activation or deactivation can take place in the following ways:

- from the compressor regulator, to assist in cooling (temperature control mode)
- from the defrost regulator, to control and/or limit the circulation of warm air.

Fan operating modes

			Day		Night	
Probe Pb2	**H42**	**FCo**	**Compressor ON**	**Compressor OFF**	**Compressor ON**	**Compressor OFF**
Present	y	0	Thermostated	Off	Thermostated	Off
		1	Thermostated	Thermostated	Thermostated	Thermostated
		2	Thermostated	Day duty cycle	Thermostated	Night duty cycle
		3	Thermostated	Day duty cycle	Thermostated	Night duty cycle
In error **E2**	y	0	On	Off	On	Off
		1	On	On	On	On
		2	On	Day duty cycle	On	Night duty cycle
		3	On	Day duty cycle	On	Night duty cycle
Absent	n	0	On	Off	On	Off
		1	On	On	On	On
		2	On	Day duty cycle	On	Night duty cycle
		3	On	Day duty cycle	On	Night duty cycle

Fan operation in temperature control mode

During cooling, fan temperature control is carried out based on values **FSt** (fan disabling temperature) and **FAd** (fan differential). Parameter **FPt** can be used to select whether the set temperature values are absolute or relative to the setpoint.

Note: around the fan start temperature -50°C (-58°F), the differential will always be specified by **FAd** but with the sign inverted.

Regulation diagrams based on whether the values are absolute or relative are shown below:

FPt = 0 (absolute values)	**FPt** = 1 (relative values)
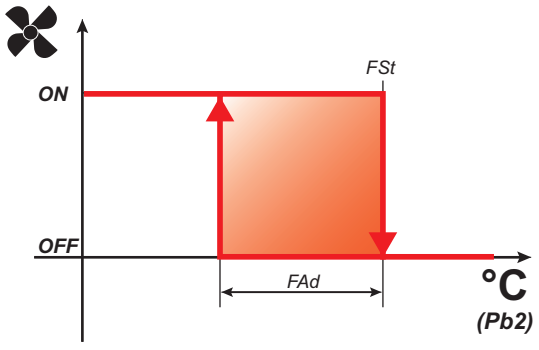	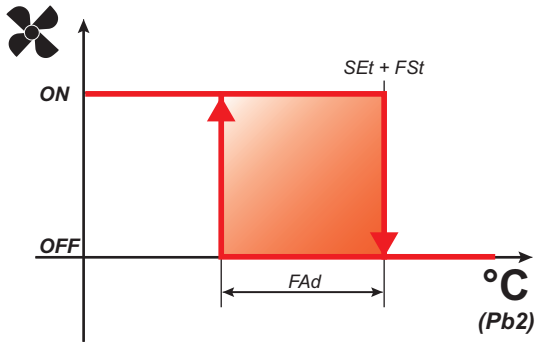

Fan operation in duty cycle

The fans run in duty cycle mode when the compressor is off and this mode is specified by parameter **FCo**.

Depending on whether the controller is in day or night mode, fan operation is based on parameters **Fon** and **FoF** (day) or **Fnn** and **FnF** (night):

Fon / Fnn	FoF / FnF	Fans
0	0	Off
0	≠0	Off
≠0	0	On
≠0	≠0	Duty cycle

Regulation diagram for Day duty cycle with compressor off

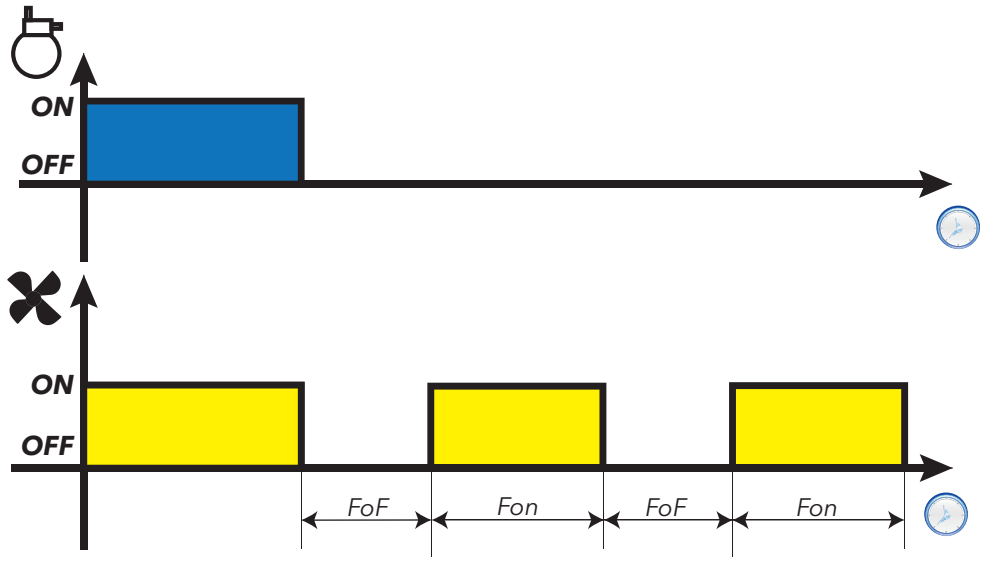

Regulation diagram for Night duty cycle with compressor off

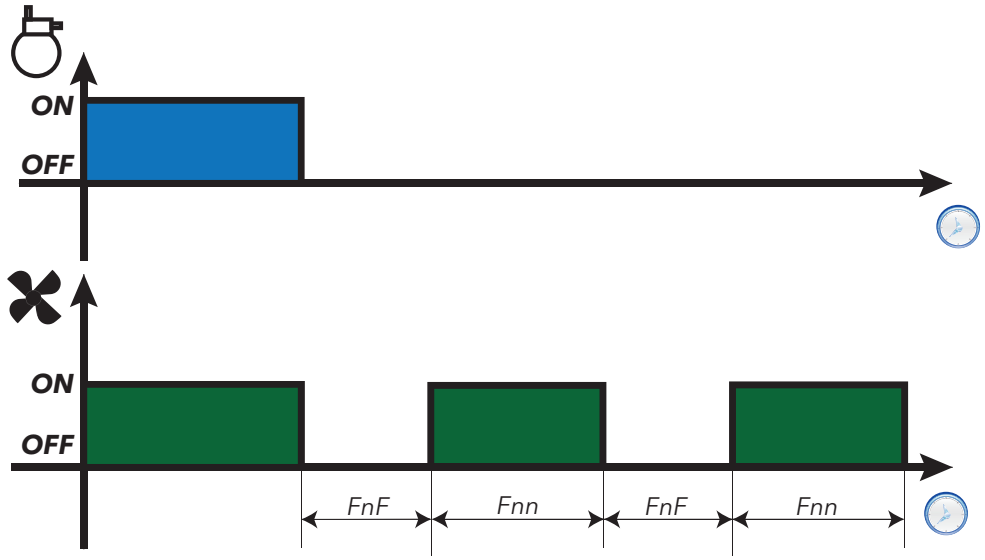

Fan operation in defrost mode

Operation depends on parameter **dFd**:

dFd	Fans
y	Off
n	Temperature control or duty cycle

Note: to exclude the fans during a defrost, you must set **dFd** = y. The compressor is actually stopped during defrost but the fans run as if the compressor was on.

Fan operation in dripping mode

During dripping the fans remain stopped for the time set using parameter **dt**.

Note: if **Fdt** is greater than **dt** the fans remain off for the time set in **Fdt**.

Post-ventilation

Parameter **FdC** delays fan deactivation after the compressor has stopped. If **FdC** = 0 the function is excluded.

Parameters

Parameter	Description
odo	Output activation delay from startup
FPt	Sets whether parameter **FSt** is expressed as an absolute value or as a value relative to the Setpoint
FSt	Evaporator fan disabling temperature
Fdt	Evaporator fan activation delay time after a defrosting cycle
dFd	Evaporator fan exclusion during a defrost cycle
FCO	Evaporator fan operating mode
FdC	Evaporator fan shutoff delay after compressor deactivation
FAd	Evaporator fan trigger differential
dt	Dripping time
Fon	Evaporator fan ON time in day duty cycle mode
FoF	Evaporator fan OFF time in day duty cycle mode
Fnn	Evaporator fan ON time in night duty cycle mode
FnF	Evaporator fan OFF time in night duty cycle mode
ESF	Night mode activation

Condenser Fans

Operating conditions

If the following conditions have arisen:

- A digital output is set as "Condenser fan inversion" (**H2x** = ±11)
- Defrost is configured as "Defrost due to stoppage"

the condenser fan regulator is activated at the moment the compressor stops (daytime operation only).

Note: this regulator is only present in models that manage probe Pb2.

Note: If the compressor and condenser fan activation delay after the call (**dFA**) and the compressor relay activation delay time after the call (**dOn**) are both configured, the larger of the two parameters will be taken into account.

Wiring diagram

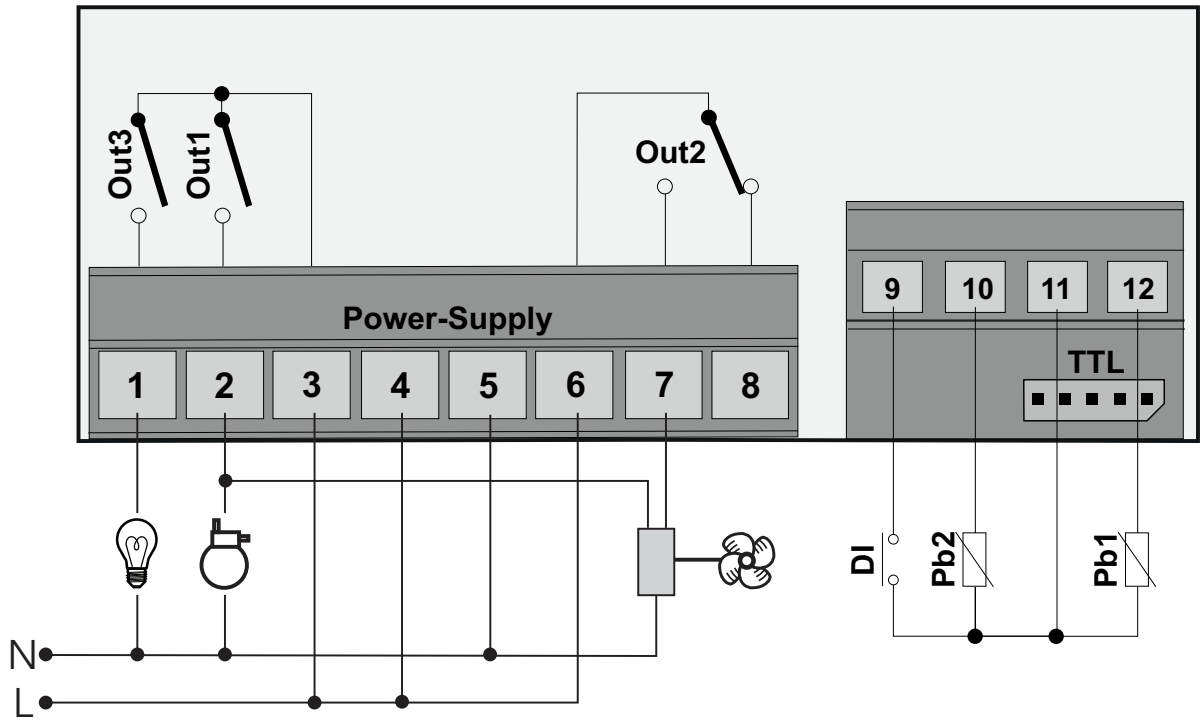

Regulation diagrams

Regulation diagram in Day mode

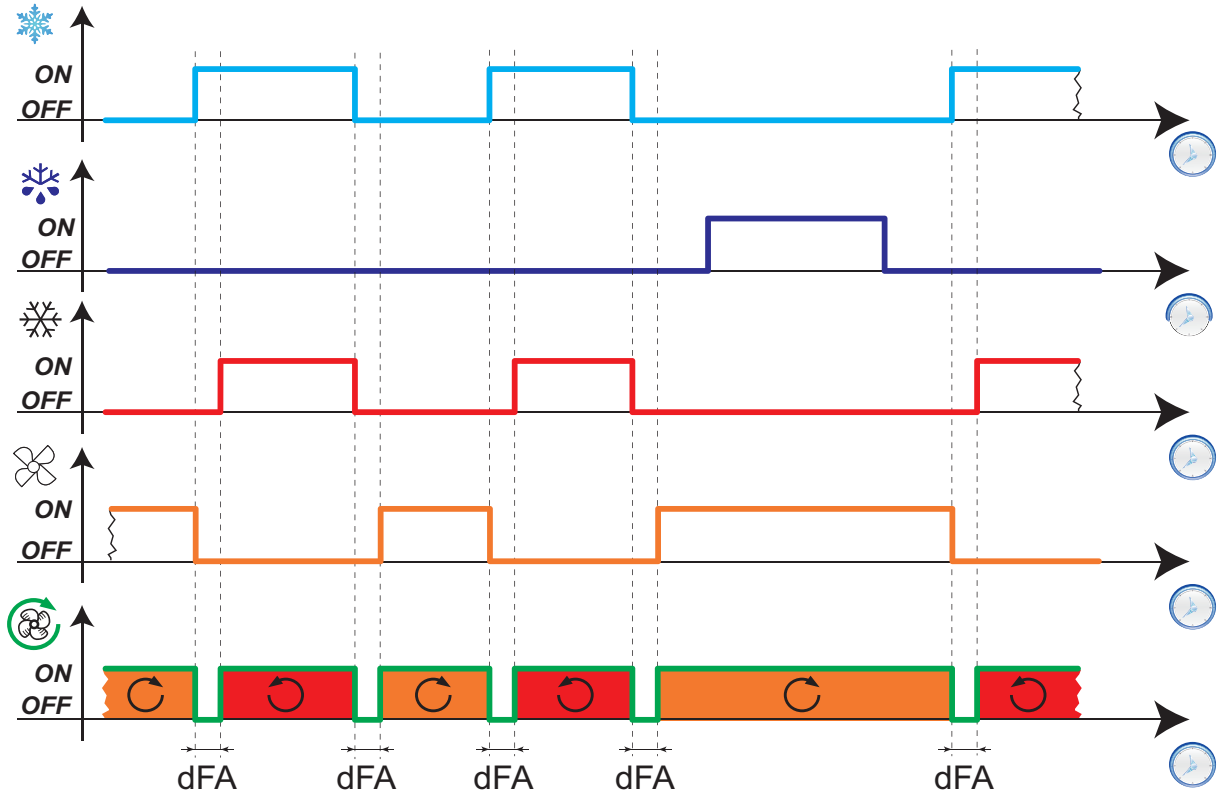

Regulation diagram in Night mode

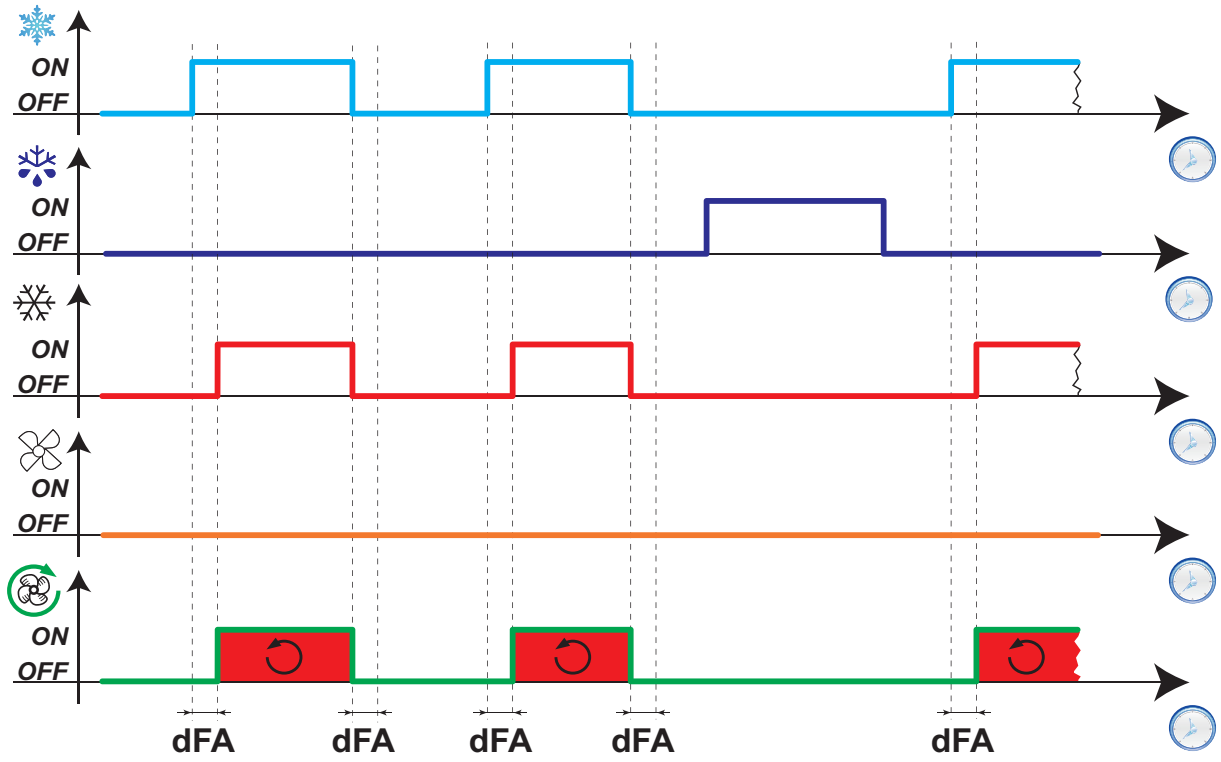

Legend: = Cool request; = Defrost request; = Compressor; = Condenser fan relay control; = Condenser fan status.

Parameters

Parameter	Description
dFA	Condenser fan and compressor activation delay from the call
dty	Type of defrost. **0** = Electric defrost or due to stoppage; **1** = Cycle inversion defrost; **2** = Free mode defrost
H21	Digital output 1 configuration
H22	Digital output 2 configuration
H23	Digital output 3 configuration
H24	Digital output 4 configuration

Pressure switch

Introduction

A pressure switch can be connected to a digital input on the controller.

Setting a digital input as a pressure switch

To set a digital input as a pressure switch:

- Set the digital input as a pressure switch (**H11** = ±7)
- Set the number of errors permitted per pressure switch, parameter **PEn**

  Note: if **PEn** = 0, the function is disabled.

Pressure switch activation effects

When the pressure switch is activated, the controller carries out the following operations:

- It inhibits the compressor
- It adds the **nPA** alarm to the alarms folder **AL** with an indication of the number of pressure switch activations

The compressor can only be reactivated if the time set using parameter **Pet** has elapsed since the pressure switch was deactivated.

The alarm status is not stored permanently and is reset automatically when the pressure returns to a normal level.

Effects of exceeding the maximum number of pressure switch activations

If the number of pressure switch activations exceeds the maximum number set using parameter **PEn** in a time period shorter than the value of parameter **PEI**, the controller performs the following operations:

- It inhibits the compressor, fans and defrost.
- The alarm icon ⚠ appears on the display.
- The label **PAL** is shown on the display.
- It adds the **PA** alarm to the alarms folder **AL** and removes the label **nPA** from the folder **AL**
- It activates the alarm relay, if configured.

To reset this alarm status, execute the **rAP** function in folder **FPr** or switch the controller off and on again.

Operating mode

The interval **PEI** is divided into 32 sub-intervals. If one or more activations are recorded within a sub-interval, the meter is increased by one unit.

The reference instant to calculate the **PEI** interval is the last recorded activation. The number of activations recorded in the 32 sub-intervals preceding the most recent activation are counted.

Note: in the pressure switch status activation period, the defrost interval count proceeds normally.

Regulation diagrams

Examples

PEI = 32 minutes (sub-interval = 32/32 = 1 minute)

PEn = 7

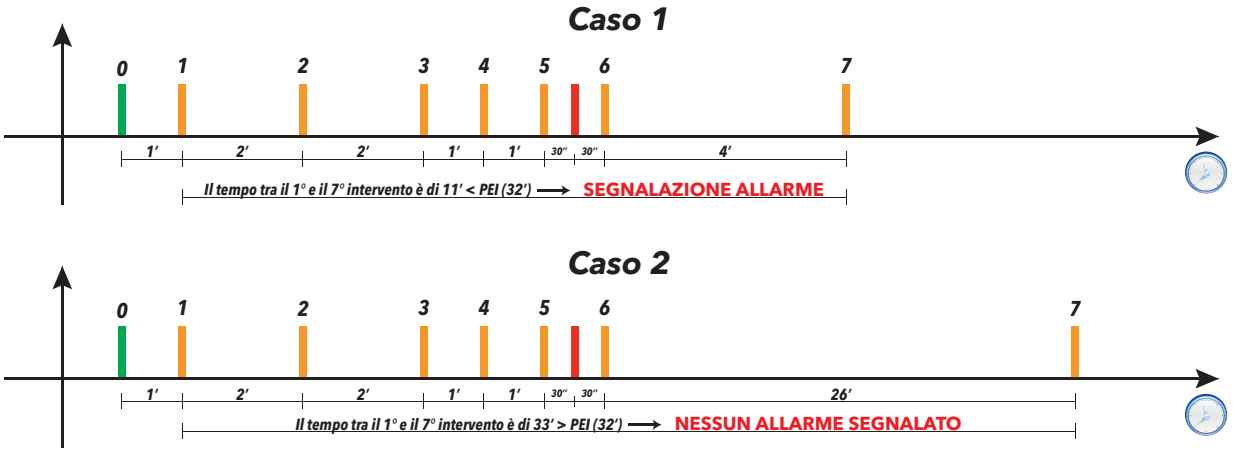

In case 1 the pressure switch alarm is triggered because in the 32 minutes preceding the most recent activation 7 pressure switch activations were counted (including the last one, to which the expiration of the 32-minute window refers).

In case 2 the alarm is not triggered because in the 32 minutes preceding the most recent activation at least 7 pressure switch activations were not counted (including the last one).

Parameters

Parameter	Description
PEn	Number of permitted activations per minimum/maximum pressure switch input
PEI	Minimum/maximum pressure switch activation count interval (in minutes)
PEt	Compressor activation delay after pressure switch deactivation

Auxiliary Output

Description

To set a relay as an auxiliary output **AUX**, set the corresponding parameter **H2x**= 5 (with **x** = 1, 2, 3 or 4).

Note: The outputs may not be present, depending on the model.

Note: every time the key is pressed the output changes (inverts) status; the digital input changes the status of the output in correspondence with its variations.

During stand-by the regulator operates in accordance with parameter **H08**.

Activation

The regulator can be activated in one of the following ways:

- key (only **H3x** = 2)
- digital input (only if **H11** = ±3)
- using a Supervisor, via Modbus command (serial)
- via APP (if the BTLE Dongle is fitted. See accessories section)
- RTC activation (models with integrated RTC function only)

Controlling the auxiliary output via key

To control the output (relay opening/closing) via key, set **H3x** = 2.

Note: depending on the model, some keys may not be present.

Note: the relay status is restored after a blackout.

Regulation diagram

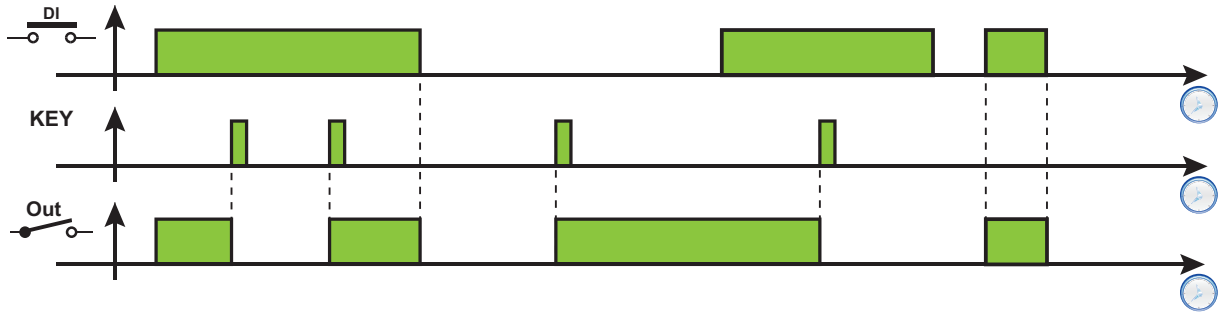

Legend: **DI** = Digital input; **KEY** = Key; **Out** = Digital output

Parameters

Parameter	Description
H06	Set whether the key or AUX/light digital input are active when the instrument is in stand-by
H08	Operating mode in stand-by
H11	Digital input 1/Polarity configuration
H21	Digital output 1 configuration
H22	Digital output 2 configuration
H23	Digital output 3 configuration
H24	Digital output 4 configuration
H31	△ key configuration.
H32	▽ key configuration.
H33	⏻ key configuration.
H34	💡 key configuration.
H35	☆ key configuration.

Light output

Description

To set a relay as an auxiliary output **AUX**, set the corresponding parameter **H2x**= 7 (with **x** = 1, 2, 3 or 4).

Note: The outputs may not be present, depending on the model.

Note: every time the key is pressed the output changes (inverts) status; the digital input changes the status of the output in correspondence with its variations.

During stand-by the regulator operates in accordance with parameter **H08**.

Activation

The regulator can be activated in one of the following ways:

- key (only if **H3x** = 8)
- digital input (only if **H11** = ±3)
- using a Supervisor, via Modbus command (serial)
- via APP (if the BTLE Dongle is fitted. See accessories section)

Controlling the light output via key

To control the output (relay opening/closing) via key, set **H3x** = 8.

Note: depending on the model, some keys may not be present.

Note: the relay status is restored after a blackout.

Regulation diagram

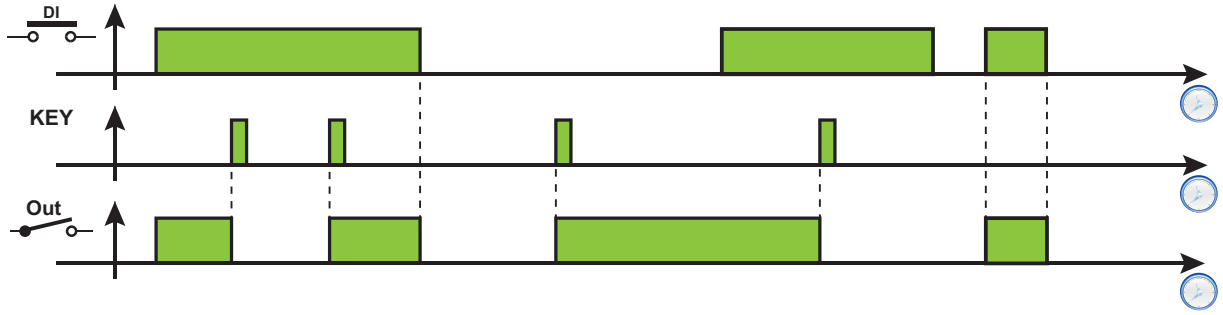

Legend: **DI** = Digital input; **KEY** = Key; **Out** = Digital output

Parameters

Parameter	Description
H06	Set whether the key or AUX/Light digital input are active when the instrument is in stand-by
H08	Stand-by operating mode
H11	Digital input 1/Polarity configuration
H21	Digital output 1 configuration
H22	Digital output 2 configuration
H23	Digital output 3 configuration
H24	Digital output 4 configuration
H31	△ key configuration.
H32	▽ key configuration.
H33	⏻ key configuration.
H34	💡 key configuration.
H35	☆ key configuration.

Deadband

Description

The Deadband function can be used to set a temperature band with two differentials pertaining to the setpoint, executing temperature regulation within a reduced range.

Activation

The Deadband zone can only be enabled if:

- at least one digital output is set to 12 (**H2x** = 12) and a heater is connected to that output
- parameter **HC** is set to Cool (**HC** = **C**)

Operation

This function should be used when you want the controlled temperature to remain around the value of the setpoint **SEt**. To do so:

- the heating output is activated when the temperature measured by Pb1 drops below the threshold (**SEt-diF**)
- the cooling output is activated when the temperature measured by Pb1 exceeds the value (**SEt+diF**).

Notes:

- If a pressure alarm (which requires a manual reset) is activated, the controller disables the outputs.
- If a defrost is active, the controller disables the output set to Deadband (**H2x** = 12).

Regulation diagram

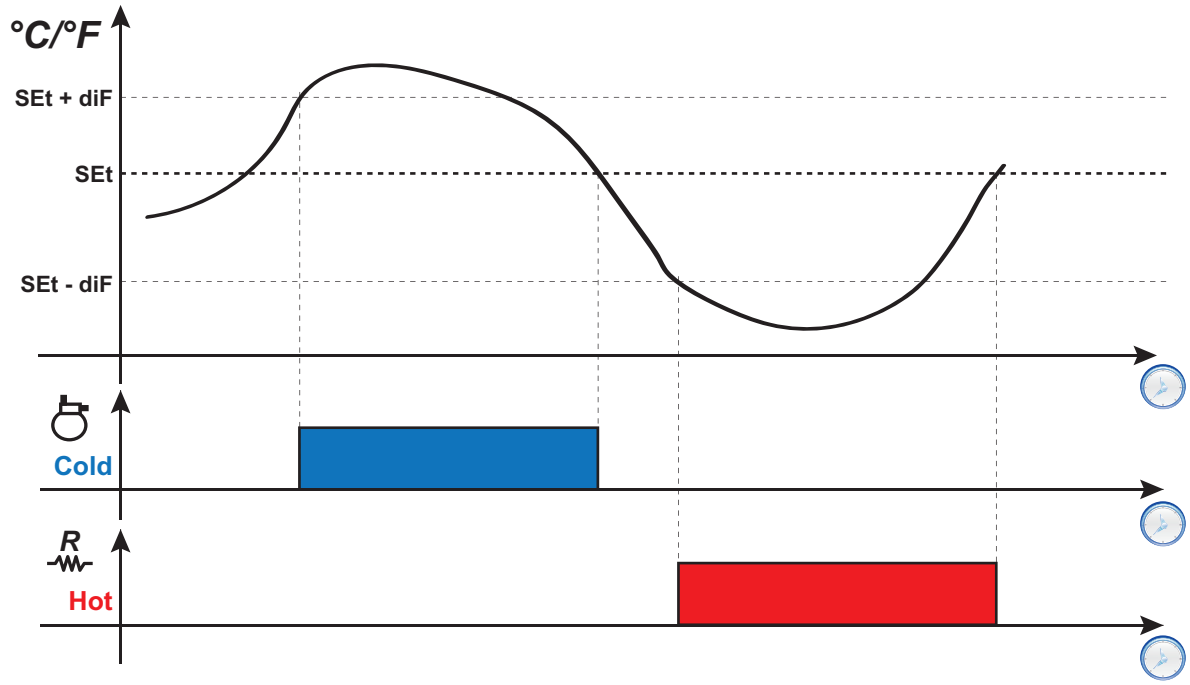

Legend: **Hot** = Heat; **Cold** = Cool.

Parameters

Parameter	Description
HC	Heat/cool operation
H21	Digital output 1 configuration
H22	Digital output 2 configuration
H23	Digital output 3 configuration
H24	Digital output 4 configuration

Night/Day

Description

The Night&Day regulator (Energy Saving) can be used to program 2 events.

Functioning conditions

An occurrence can be linked to each of the two events by setting parameters **E10** (Event 1) and **E20** (Event 2):

- **0** = disabled
- **1** = event only active on Mondays
- **2** = event only active on Tuesdays
- **3** = event only active on Wednesdays
- **4** = event only active on Thursdays
- **5** = event only active on Fridays
- **6** = event only active on Saturdays
- **7** = event only active on Sundays
- **8** = event active from Monday to Friday
- **9** = event active from Monday to Saturday
- **10** = event only active on Saturdays and Sundays
- **11** = event active every day

The start and end time can be set for each event:

- START: **E11**, **E12** (Event 1) and **E21**, **E22** (Event 2)
- END: **E13**, **E14** (Event 1) and **E23**, **E24** (Event 2).

If the event end time follows the start time, the event will end on the same day, otherwise it will start on one day and end the next day.

You can set the type of each of the two events using parameters **E15** (Event 1) and **E25** (Event 2):

- **0** = Energy saving
- **1** = AUX deactivated
- **2** = AUX activated
- **3** = Stand-by
- **4** = Light on
- **5** = Light off.

Regulation diagrams

Example 1: The event starts and ends on the same day (E11/E12 < E13/E14)

Settings: **E10** = 8; **E11** = 8; **E12** = 0; **E13** = 20; **E14** = 0 and **E15** = 4.

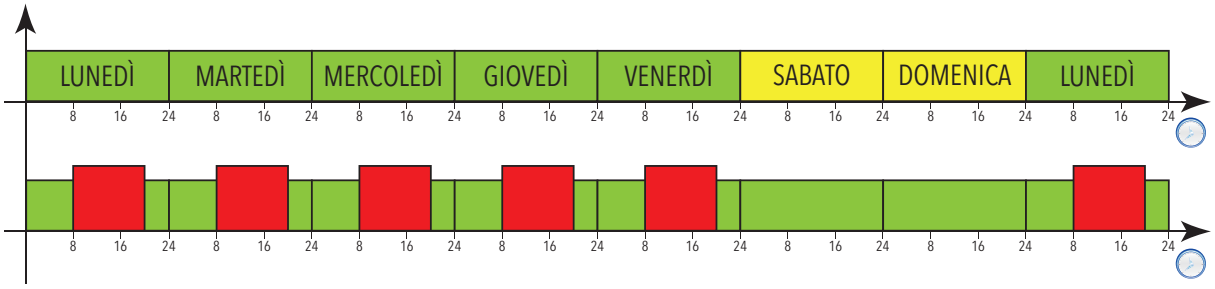

Example 2: The event starts on one day and ends the next day (E11/E12 > E13/E14)

Settings: **E10** = 8; **E11** = 16; **E12** = 0; **E13** = 4; **E14** = 0 and **E15** = 0.

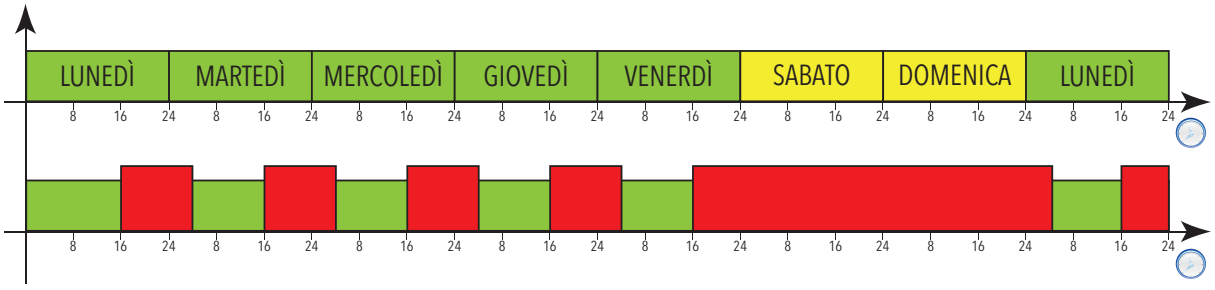

Regulation during a blackout

If a blackout occurs during a Night&Day (NaD), then:

- if a **NaD** event was active and the power supply is restored within the same period of activity as the event, the controller will restart with the same status set by the event
- if a **NaD** event was active and the power supply is restored after the end of the same period but before the next event, the controller will restart, ending the event
- if a **NaD** event was active and the power supply is restored not only after the end of the same period but after the start of one of the next events, the controller will restart, setting the status associated with the new event
- external events (key press, activation of a digital input, serial command) always have priority over the status set by the **NaD** event until the next **NaD** event (activation or deactivation). These events are only acknowledged if the power supply is present
- If an external event inverts the status set by the **NaD** event during a status activation, and then there is a blackout and the power supply is restored within the same period, the controller will restart with the status set by the external event. At the end of the **NaD** event, the status of the controller will be restored to its initial condition
- If an external event inverts the status set by the **NaD** event during a status activation, and then there is a blackout and the power supply is restored after the end of the same period but during one of the next events, the controller will restart with the status forced by the external event
- If an external event inverts the status set by a **NaD** event outside a **NaD** event status activation, and then there is a blackout and the power supply is restored with no **NaD** event active, the controller will restart with the status forced by the external event
- If an external event inverts the status set by a **NaD** event outside a **NaD** event status activation, and then there is a blackout and the power supply is restored during a new **NaD** event, the controller will restart with the status requested by the external **NaD** event

Parameters

Parameter	Description
E10	Select Event 1 activation method
E11	Event 1 start hour
E12	Event 1 start minute
E13	Event 1 end hour
E14	Event 1 end minute
E15	Set Event 1 type
E20	Select Event 2 activation method
E21	Event 2 start hour
E22	Event 2 start minute
E23	Event 2 end hour
E24	Event 2 end minute
E25	Set Event 2 type

Energy Saving - Reduced Set

Reduced set operating conditions

The Reduced set function can be activated:

- by pressing and holding a key (configured with **H3x** = 3)
- by activating the digital input (**DI**) (only if **H11** = ±2)
- using a Supervisor, via Modbus command (serial)
- via APP (if the BTLE Dongle is fitted. See accessories section)
- via the functions menu (reduced set only, if present)

When the "reduced set" is activated:

- the icon comes on
- **SEt** will be replaced by the value (**SEt + OSP**)
- **diF** will be replaced by the value (**diF+ OdF**)

Note: for further details, see: "Heat/Cool Regulator".

Energy Saving operating conditions

The Energy Saving or Reduced set function can be activated:

- by activating the digital input (**DI**) (only if **H11** = ±10)
- using a Supervisor, via Modbus command (serial)
- via APP (if the BTLE Dongle is fitted. See accessories section)
- via the functions menu (reduced set only, if present)

When "Energy Saving" mode is activated:

- the icon comes on
- **SEt** will be replaced by the value (**SEt + OSP**)
- **diF** will be replaced by the value (**diF+ OdF**)
- the outputs set as AUX and Light are deactivated

Regulation diagrams

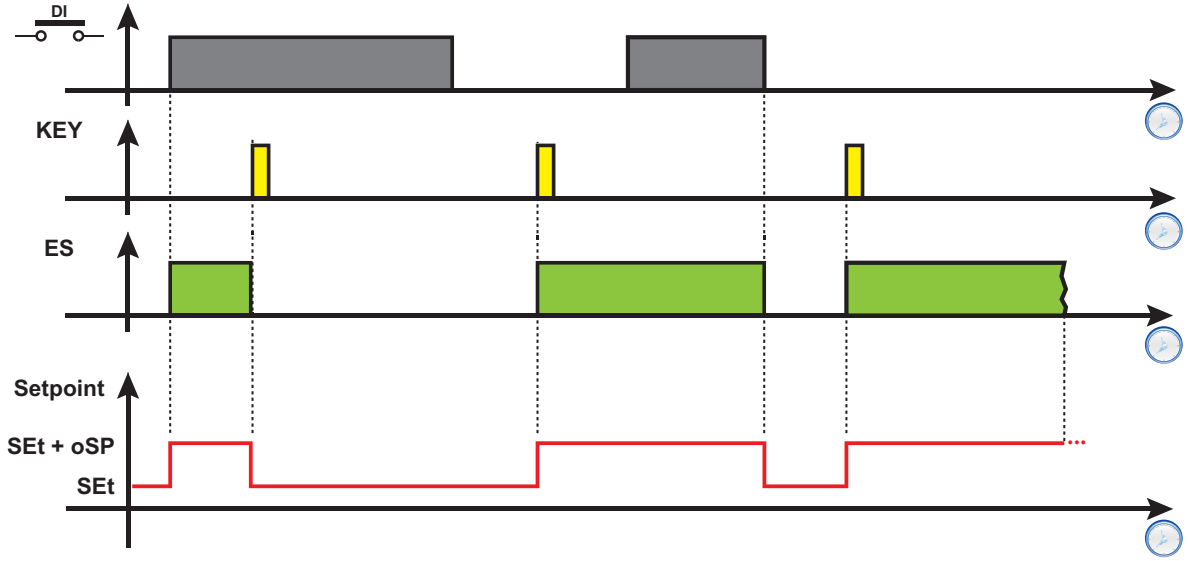

Legend: **DI** = Digital input; **KEY** = Key press; **ES** = Energy Saving; **Setpoint** = Setpoint value.

Parameters

Parameter	Description
SEt	Regulation setpoint
diF	Regulator activation differential
OSP	Offset on setpoint
OdF	Offset on differential in energy saving mode
H11	Digital input 1/polarity configuration.
H31	∧ key configuration.
H32	∨ key configuration.
H33	⏻ key configuration.
H34	💡 key configuration.
H35	☆ key configuration.

Diagnostics

Contents

This section includes the following topics:

Alarms and indications 108
Minimum and maximum temperature alarm 110

Alarms and indications

Introduction

All alarms are deactivated automatically when their cause is removed, except the permanent pressure switch alarm, which can be deactivated via the **rAP** function.

Detecting an alarm condition

If there is an alarm condition, the alarm icon ⚠ comes on steadily. If present and enabled, the buzzer and alarm relay are also activated.

Note: If alarm exclusion timings are in progress, the alarm is not signaled.

All active alarms, except those relating to probe error, are listed in the **AL** folder within the "Machine status" menu.

Silencing the buzzer

Press any key or use the menu function: the buzzer is silenced, the alarm icon ⚠ flashes and the alarm relay is de-energized.

Alarms legend

Code	Description	Buzzer and alarm relays	Cause	Effects	Solutions
E1	Probe Pb1 in error	Active	• Reading of values outside the operating interval • Probe or corresponding wiring in short-circuit or open circuit	• **E1** shown • Steady alarm icon ⚠ • Disabling of the maximum/minimum alarm regulator • Compressor operation based on parameters **Ont** and **OFt**	• Check the type of probe (default NTC) • Check the probe wiring • Replace probe
E2	Probe Pb2 in error **Note**: only models that manage probe Pb2	Active	• Reading of values outside the operating interval • Probe or corresponding wiring in short-circuit or open circuit	• **E2** shown • Steady alarm icon ⚠ • Defrost ends due to timeout (**dEt**) • The evaporator fans are: on (compressor ON), or run according to parameter **FCo**, (compressor OFF).	• Check the type of probe (default NTC) • Check the probe wiring • Replace probe
E3	Probe Pb3 in error **Note**: only models that manage probe Pb3	Active	• Reading of values outside the operating interval • Probe or corresponding wiring in short-circuit or open circuit	• **E3** shown • Steady alarm icon ⚠ • No effect on regulation	• Check the type of probe (default NTC) • Check the probe wiring • Replace probe
AH1	Probe Pb1 high temperature alarm	Active	Value read by Pb1 > **HAL** after time equal to **tAo** (see section "Minimum and maximum temperature alarm" a pagina 110)	• Alarm **AH1** added to folder **AL** • No effect on regulation	Wait for the temperature read by Pb1 to drop below the alarm threshold (**HAL**-**AFd**)
AL1	Probe Pb1 low temperature alarm	Active	Value read by Pb1 < **LAL** after time equal to **tAo** (see section "Minimum and maximum temperature alarm" a pagina 110)	• Alarm **AL1** added to folder **AL** • No effect on regulation	Wait for the temperature read by Pb1 to rise above the alarm threshold (**LAL**+**AFd**)
EA	External alarm	Active	Activation of the digital input (**H11** = ±5)	• Alarm **EA** added to folder **AL** • Steady alarm icon ⚠ • Regulation inhibited if **EAL** = y	Check and remove the external cause that caused the alarm on the digital input
OPd	Door open alarm	Active	Digital input activation (**H11** = ±4) for a time greater than **tdo**	• Alarm **Opd** added to folder **AL** • Steady alarm icon ⚠ • Regulator inhibited, on the basis of parameter **dod**	• Close the door • Increase the value of parameter **oAo**
Ad2	Defrost due to timeout	Not active	End of defrost due to timeout, instead of the defrost end temperature being detected by Pb2	• Alarm **Ad2** added to folder **AL** • Steady alarm icon ⚠	Wait for the next defrost for automatic deactivation

Code	Description	Buzzer and alarm relays	Cause	Effects	Solutions
COH	Overheating alarm	Active	Value set by parameter **SA3** exceeded	• Alarm **COH** added to folder **AL** • Steady alarm icon ⚠ • Compressor regulation inhibited	Wait for the temperature read by Pb1 to drop below the alarm threshold (**SA3**-**dA3**)
E10	Clock alarm **Note**: models with RTC only	Not active	Clock alarm or battery low	• Alarm **E10** added to folder **AL** • Functions connected to the clock not present or not synchronized with the current timings	Set the correct time. If the error persists, replace the instrument (RTC battery low)
rFA	Add refrigerant alarm	Not active	When the compressor is on, the temperature progress does not fall within an interval set with **rFT**.	• Alarm **rFA** added to folder **AL** • Steady alarm icon ⚠	Switch the instrument off and on again (alarm deactivated if **rFT** = 0)
nPA	Pressure switch alarm	Not active	Pressure switch alarm activation caused by the external pressure switch	If the number **n** of pressure switch activations is lower than **PEn**: • Alarm **nPA** is added to the folder **AL** with the number of pressure switch activations • Compressor regulation inhibited	Check and remove the cause that triggered the alarm on the digital input (automatic reset)
PAL	Pressure switch alarm	Active	Pressure switch alarm activation caused by the external pressure switch	If the number **N** of pressure switch activations is **N** = **PEn** in a time period < **PEi**: • **PAL** is shown • Alarm **PA** is added to the folder **AL** and alarm **nPA** is removed from the folder **AL** • Steady alarm icon ⚠ • Compressor regulation, fans and defrost are inhibited	• Switch the controller off and on again • Select **rAP** (manual reset) in the functions folder to reset the alarms.

Minimum and maximum temperature alarm

Introduction

High and low temperature alarms are excluded during a defrost. The triggering of these alarms does not have any effect on the regulation in progress.

Description

The alarms operate according to the temperature read by regulation probe Pb1. The accepted temperature interval limits are set using parameters **HAL** and **LAL**.

Alarm codes

Code	Description
AH1	High temperature alarm
AL1	Low temperature alarm

Absolute or relative temperature values

Depending on the value of parameter **Att**, the temperature is expressed as an absolute or relative value (differential in respect to the setpoint):

Att value	Label	Description
0	**Ab**	Absolute values. The **HAL** and **LAL** values must have a sign.
1	**rE**	Relative values. **HAL** > 0 and **LAL** < 0.

Alarm conditions

Att value	Temperature read by Pb1	Alarm generated
0	≥ **HAL**	Maximum temperature
	≤ **LAL**	Minimum temperature
1	≥ (**SEt** + **HAL**)	Maximum temperature
	≤ (**SEt** + **LAL**)	Minimum temperature

Conditions for alarm deactivation

Att value	Temperature read by Pb1	Alarm generated
0	≤ (**HAL** - **AFd**)	Maximum temperature
	≥ (**LAL** + **AFd**)	Minimum temperature
1	≤ (**SEt** + **HAL** - **AFd**)	Maximum temperature
	≥ (**SEt** + **LAL** + **AFd**)	Minimum temperature

Operating diagrams

Operation with Att=0 (absolute values)

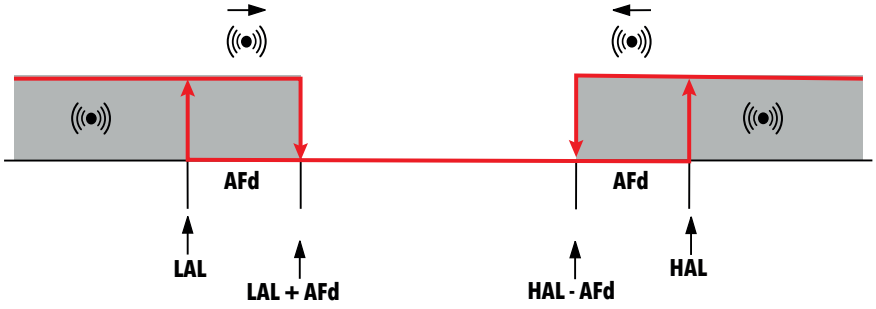

Operation with Att=1 (relative values)

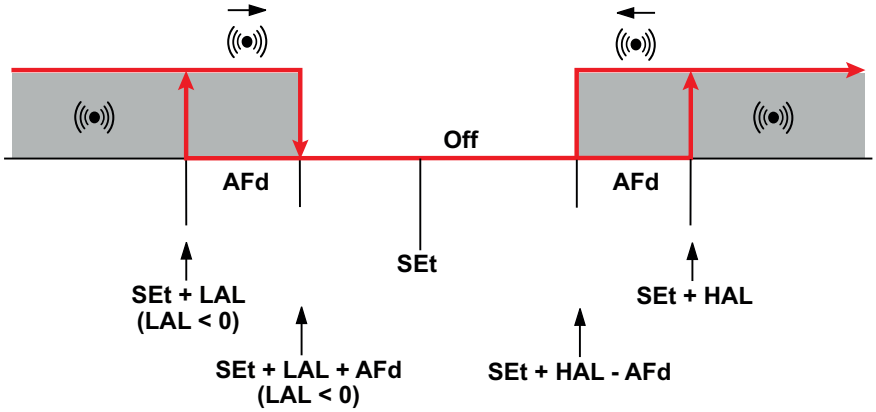

Parameters

Parameter	Description
Att	Expression mode for **HAL** and **LAL** values (absolute or relative)
Afd	Alarm activation differential
HAL	Maximum temperature limit
LAL	Minimum temperature limit
PAO	Temperature alarm exclusion time from startup
dAO	Exclusion time for temperature alarms after a defrost cycle
OAO	Exclusion time for temperature alarms after closing the door
tAO	Temperature alarm signaling delay time

Parameters IDNext -HC

Contents

This section includes the following topics:

Parameters IDNext 902 P 113
Parameters IDNext 961 P 118
Parameters IDNext 971 P/B 123
Parameters IDNext 974 P/B 130
Parameters IDNext 974 P/C 137
Parameters IDNext 974 P/CI 146
Parameters IDNext 978 P/B 155
Parameters IDNext 978 P/C 162
Parameters IDNext 978 P/CI 170

Parameters IDNext 902 P

User parameters IDNext 902 P

Parameter	Description	Range	UM	Default	AP1	AP2	AP3
SEt	Regulation setpoint with range between the minimum setpoint **LSE** and the maximum setpoint **HSE**. The setpoint value is set in the "Machine status" menu.	**LSE**...**HSE**	°C/°F	3.0	3.0	0.0	0.0
diF	Compressor relay activation differential; the compressor stops when reaching the entered setpoint (upon indication of the regulation probe) and restarts at a temperature value equal to the setpoint plus the value of the differential. **Note**: always a value other than 0.	0.1...30.0	°C/°F	2.0	2.0	2.0	2.0
LSE	Minimum setpoint value	-67.0...**HSE**	°C/°F	-55.0	-55.0	-55.0	-55.0
HSE	Maximum setpoint value	**LSE**...302	°C/°F	140.0	140.0	140	140
dEt	Defrost timeout. Determines the maximum duration of the defrost	1...250	min	20	20	25	1
dit	Time interval between one defrost and the next	0...250	hours	6	6	6	0
HAL	Maximum temperature alarm. Temperature value (in a relative value) which, when exceeded, will lead to the activation of alarm signaling.	**LAL**...302	°C/°F	150.0	150.0	150.0	150.0
LAL	Minimum temperature alarm. Temperature value (in a relative value) which, when not reached, will lead to the activation of alarm signaling.	-67.0...**HAL**	°C/°F	-50.0	-50.0	-50.0	-50.0
rFt	Low refrigerant alarm signaling delay.	0...250	min	0 (not in applications)			
CA1	Positive or negative temperature value to be added to the value of Pb1.	-30.0...30.0	°C/°F	0.0	0.0	0.0	0.0
PS1	When enabled (**PS1**≠0) this is the access key for the user parameters.	0...250	num	0	0	0	0
tAb	Reserved: read-only parameter.	/	/	/	/	/	/
rAP	Reset pressure switch alarms	/	/	/	/	/	/

Note: the “User” menu parameters also include **PA2**, which allows access to the "Installer" menu.
Note: for the full list of parameters, see the section "**Installer parameters**".

Installer parameters IDNext 902 P

Parameter	Description	Range	UM	Default	AP1	AP2	AP3
SEt	Regulation setpoint with range between the minimum setpoint **LSE** and the maximum setpoint **HSE**. The setpoint value is set in the "Machine status" menu.	**LSE**...**HSE**	°C/°F	3.0	3.0	0.0	0.0
CP (Compressor)							
diF	Compressor relay activation differential; the compressor stops when reaching the entered setpoint (upon indication of the regulation probe) and restarts at a temperature value equal to the setpoint plus the value of the differential. **Note**: always a value other than 0.	0.1...30.0	°C/°F	2.0	2.0	2.0	2.0
LSE	Minimum setpoint value	-67.0...**HSE**	°C/°F	-55.0	-55.0	-55.0	-55.0
HSE	Maximum setpoint value	**LSE**...302	°C/°F	140.0	140.0	140	140
HC	The regulator will execute operation for cooling (set "**C**(0)") or heating (set "**H**(1)")	C/H	flag	C	C	C	H
ont	Regulator switch-on time for faulty probe: • if **Ont** = 1 and **OFt** = 0 compressor always on • if **Ont** = 1 and **OFt** > 0 compressor in duty cycle	0...250	min	15	15	15	0
oFt	Regulator switch-off time for faulty probe: • if **OFt** = 1 and **Ont** = 0 compressor always off • if **OFt** = 1 and **Ont** > 0 compressor in duty cycle	0...250	min	15	15	15	0
don	Compressor relay activation delay time from call	0...250	s	0	0	0	0
doF	Delay time after switch-off; the indicated time must elapse between compressor relay switch-off and a subsequent switch-on.	0...250	min	0	0	0	0
dbi	Delay time between switch-ons; the indicated time must elapse between two consecutive compressor switch-ons.	0...250	min	0	0	0	0
Cit	Minimum compressor activation time before it can be deactivated. If **Cit** = 0 it is not active.	0...250	min	0	0	0	-
CAt	Maximum compressor activation time before it can be deactivated. If **CAt** = 0 it is not active.	0...250	min	0	0	0	-
odo	Output activation delay time from switching on the controller or after a power failure. **0** = not active	0...250	min	0	0	0	0
dCS	"Deep cooling cycle" setpoint	-67.0...302	°C/°F	0.0	0.0	0.0	0.0
tdC	"Deep cooling cycle" duration	0...250	min	0	0	0	0
dcc	Defrost activation delay after a "Deep cooling cycle"	0...250	min	0	0	0	0
dEF (Defrost)							
dOH	Defrost cycle activation delay from the call	0...250	min	0	0	0	0
dEt	Defrost timeout. Determines the maximum duration of the defrost	1...250	min	20	20	25	1
dPo	Defrost activation request at startup, if the temperature measured by Pb2 allows. **n**(0) = no; **y**(1) = yes	n/y	flag	n	n	n	n
tCd	Minimum period of time with the compressor ON or OFF before defrost is activated.	0...250	min	0	0	0	0
Cod	Time with the compressor OFF before defrost is activated	0...250	min	0	0	0	0

Parameter	Description	Range	UM	Default	AP1	AP2	AP3
dMr	Enables the defrost count reset in the case of manual defrosting. **n** = count reset does not take place; **y** = count reset takes place	n/y	flag	n	n	n	n
d00	Compressor running time before defrost is activated	0...250	hours	0	0	0	-
d01	Sets the unit of measure in **d00**: **0** = hours; **1** = minutes; **2** = seconds.	0/1/2	num	0	0	0	-
dit	Time interval between one defrost and the next	0...250	hours	6	6	6	0
d11	Sets the unit of measure in **dit**. **0** = hours; **1** = minutes; **2** = seconds.	0/1/2	num	0	0	0	-
d20	Can be used to activate the defrost when the compressor is off. • **0** = disabled. Defrost is not activated. • **1** = enabled. Defrost is activated when the compressor is off.	0/1	flag	0	0	0	-
AL (Alarms)							
Att	Sets the absolute or relative value for parameters **HAL** and **LAL**. **0** = absolute value **1** = relative value	0/1	flag	0	0	0	0
AFd	Alarm differential.	0.1...25.0	°C/°F	2.0	2.0	2.0	2.0
HAL	Maximum temperature alarm. Temperature value (in a relative value) which, when exceeded, will lead to the activation of alarm signaling.	**LAL**...302	°C/°F	150.0	150.0	150.0	150.0
LAL	Minimum temperature alarm. Temperature value (in a relative value) which, when not reached, will lead to the activation of alarm signaling.	-67.0...**HAL**	°C/°F	-50.0	-50.0	-50.0	-50.0
PAo	Alarm exclusion time when switching on the controller, after a power failure.	0...10	hours	0	0	0	0
dAo	Temperature alarm exclusion time after defrosting.	0...250	min	0	0	0	0
oAo	Alarm signaling delay after deactivation of the digital input (door closure). Alarm refers to high and low temperature alarms.	0...10	hours	0	0	0	0
tdO	Door open alarm activation delay time.	0...250	min	0	0	0	0
tAo	Temperature alarm signaling delay time.	0...250	min	0	0	0	0
dAt	Defrost ended due to timeout alarm indication. **n**(0) = does not activate alarm; **y**(1) = activates alarm.	n/y	flag	0	0	0	0
EAL	An external alarm inhibits the regulators. **0** = regulators not inhibited; **1** = compressor and defrost inhibited; **2** = fans, compressor and defrost inhibited;	0/1/2	flag	n	n	n	n
SA3	Probe 3 alarm setpoint.	-67.0...302	°C/°F	0.0	0.0	0.0	0.0
dA3	Probe 3 alarm differential.	0.1...30.0	°C/°F	1.0	1.0	1.0	1.0
rFt	Low refrigerant alarm signaling delay.	0...250	min	0 (not in applications)			
Lit (Lights and digital inputs)							
dOd	Digital input shuts off utilities: **0** = disabled; **1** = fans disabled; **2** = compressor disabled; **3** = fans and compressor disabled.	0...3	num	0	0	0	-
dAd	Digital input activation delay	0...250	min	0	0	0	-
dCO	Compressor activation delay from acknowledgment	0...250	min	1	1	1	-
PrE (Pressure switch)							
Pen	Number of errors permitted per minimum/maximum pressure switch input	0...15	num	0	0	0	0

Parameter	Description	Range	UM	Default	AP1	AP2	AP3
PEi	Minimum/maximum pressure switch error count interval	1...99	min	1	1	1	1
PEt	Compressor activation delay after pressure switch deactivation	0...255	min	0	0	0	0
EnS (Energy Saving)							
oSP	Temperature value to be added to the setpoint in the case of an enabled reduced set (Economy function)	-30.0...30.0	°C/°F	0.0	0.0	0.0	0.0
OdF	Differential offset during an energy saving cycle or reduced set	0.1...30.0	°C/°F	2.0	2.0	2.0	2.0
Add (Communication)							
Adr	Modbus protocol controller address.	1...247	flag	1 (not in applications)			
bAU	Modbus Baudrate selection. **96** (0) = 9600; **192** (1) = 19200; **384** (2) = 38400	96/192/384	num	96 (not in applications)			
Pty	Modbus parity bit. **n**(0) = none; **E**(1) = even; **o**(2) = odd.	n/E/o	num	E (not in applications)			
diS (Display)							
dro	Selects the unit of measure used when displaying the temperature read by the probes. (**0** = °C, **1** = °F). **Note**: changing from °C to °F or vice-versa does NOT change the **SEt**, **diF** values, etc. (example: **SEt** = 10°C becomes 10°F).	0/1	flag	0	0	0	0
CA1	Positive or negative temperature value to be added to the value of Pb1.	-30.0...30.0	°C/°F	0.0	0.0	0.0	0.0
CA3	Positive or negative temperature value to be added to the value of Pb3.	-30.0...30.0	°C/°F	0.0	0.0	0.0	0.0
CAi	Activation of the calibration value. **0** = Adds the value to the temperature value displayed; **1** = Adds the value to the temperature used by the regulators and not to the one displayed; **2** = Adds the value to the temperature used by the regulators and to the temperature displayed.	0/1/2	num	2	2	2	2
LoC	Keypad lock. **n**(0) = Keypad lock disabled **y**(1) = Keypad lock enabled (On startup or when 30 seconds have passed since the last action carried out on the user interface).	n/y	flag	y	y	y	y
ddd	Selects the type of value to show on the display. **0** = setpoint; **1** = probe Pb1 ; **2** = probe Pb2 ; **3** = probe Pb3.	0...3	num	1	1	1	1
ddL	Display mode during defrosting. **0** = displays the temperature read by Pb1; **1** = inhibits reading on the value of Pb1 at the start of defrost and until the setpoint is reached; **2** = displays the label **dEF** during the defrost until the setpoint is reached.	0/1/2	num	0	0	0	0
Ldd	Display unlock timeout value - label **dEF**	0...250	min	30	30	30	30
ndt	Display with decimal point. **n**(0) = no; **y**(1) = yes.	n/y	flag	y	y	y	y
FSE	Sets the value (COEFF) used by the low-pass filter to calculate the temperature value to be displayed. **0** = deactivated; **1** = 200; **2** = 100; **3** = 50; **4** = 25; **5** = 12; **6** = 6; **7** = 3.	0...7	num	0	0	0	0
FdS	Filter disabling threshold.	-67.0...302	°C/°F	0	0	0	0
Ftt	Time that has passed beyond the value of **FdS** before the filter is disabled.	0...250	min	0	0	0	0
FHt	Filter sampling interval.	1...250	s	1	1	1	1

Parameter	Description	Range	UM	Default	AP1	AP2	AP3
PS1	When enabled (**PS1**≠0) this is the access key for the user parameters.	0...250	num	0	0	0	0
PS2	When enabled (**PS2**≠0) this is the access key for the installer parameters.	0...250	num	15	15	15	15
CnF (Configuration)							
H00	Selects the probe type. **0** = PTC; **1** = NTC; **2** = Pt1000.	0/1/2	flag	1	1	1	1
H08	Stand-by operating mode. **0** = display off; the regulators are active and the device signals any alarms by reactivating the display; **1** = display off; the regulators and alarms are inhibited; **2** = the display shows the label "OFF"; the regulators and alarms are inhibited.	0/1/2	num	2	2	2	2
H11	Digital input 1/polarity configuration: **0** = disabled; **±1** = defrost; **±2** = reduced set; **±3** = auxiliary; **±4** = door switch; **±5** = external alarm; **±6** = stand-by; **±7** = pressure switch; **±8** = deep cooling (DCC); **±9** = light; **±10** = energy saving. **Note**: • the "+" sign indicates that the input is active if the contact is closed. • the "-" sign indicates that the input is active if the contact is open.	-10...+10	num	0	0	0	0
H21	Configuration of digital output 1 (**Out1**): **0** = disabled; **1** = compressor; **2** = defrost; **3** = evaporator fan; **4** = alarm; **5** = auxiliary; **6** = stand-by; **7** = light; **8** = buzzer; **9** = compressor 2; **10** = evaporator 2 defrost; **11** = condenser fans; **12** = heater deadband control; **13** = variable speed compressor (VSC).	0...13	num	1	1	1	1
H31	△ key configuration. **0** = disabled; **1** = defrost; **2** = auxiliary; **3** = reduced set; **4** = stand-by; **5** = not used **6** = not used; **7** = deep cooling (DCC); **8** = light.	0...8	num	1	1	1	1
H32	▽ key configuration. Same as **H31**.	0...8	num	0	0	0	0
H33	⏻ key configuration. Same as **H31**.	0...8	num	4	4	4	4
H43	Probe Pb3 present. **n**(0) = not present; **y**(1) = present; **2EP**(2) = second evaporator.	n/y/2EP	flag	n	n	n	n
H60	Display selected application. **0** = disabled; **1** = AP1; **2** = AP2; **3** = AP3.	0...3	num	1 (not in applications)			
tAb	Reserved: read-only parameter.	/	/	/	/	/	/
FPr (UNICARD)							
UL	Transfer of the programming parameters from the device to the UNICARD	/	/	/ (not in applications)			
Fr	UNICARD formatting. Deletes all data on the UNICARD. **Note**: the use of parameter **Fr** results in the loss of all data entered. This operation cannot be reversed.	/	/	/ (not in applications)			
FnC (Functions)							
rAP	Reset pressure switch alarms	/	/	/	/	/	/

Note: if one or more parameters in folder **CnF** or marked with **(!)** are changed, the controller must be switched off and then on again to make sure it works properly.

Parameters IDNext 961 P

User parameters IDNext 961 P

Parameter	Description	Range	UM	Default	AP1	AP2	AP3
SEt	Regulation setpoint with range between the minimum setpoint **LSE** and the maximum setpoint **HSE**. The setpoint value is set in the "Machine status" menu.	**LSE**...**HSE**	°C/°F	3.0	3.0	0.0	0.0
diF	Compressor relay activation differential; the compressor stops when reaching the entered setpoint (upon indication of the regulation probe) and restarts at a temperature value equal to the setpoint plus the value of the differential. **Note**: always a value other than 0.	0.1...30.0	°C/°F	2.0	2.0	2.0	2.0
LSE	Minimum setpoint value	-67.0...**HSE**	°C/°F	-55.0	-55.0	-55.0	-55.0
HSE	Maximum setpoint value	**LSE**...302	°C/°F	140.0	140.0	140	140
dEt	Defrost timeout. Determines the maximum duration of the defrost	1...250	min	20	20	25	1
dit	Time interval between one defrost and the next	0...250	hours	6	6	6	0
HAL	Maximum temperature alarm. Temperature value (in a relative value) which, when exceeded, will lead to the activation of alarm signaling.	**LAL**...302	°C/°F	150.0	150.0	150.0	150.0
LAL	Minimum temperature alarm. Temperature value (in a relative value) which, when not reached, will lead to the activation of alarm signaling.	-67.0...**HAL**	°C/°F	-50.0	-50.0	-50.0	-50.0
rFt	Low refrigerant alarm signaling delay.	0...250	min	0 (not in applications)			
CA1	Positive or negative temperature value to be added to the value of Pb1.	-30.0...30.0	°C/°F	0.0	0.0	0.0	0.0
PS1	When enabled (**PS1**≠0) this is the access key for the user parameters.	0...250	num	0	0	0	0
tAb	Reserved: read-only parameter.	/	/	/	/	/	/
rAP	Reset pressure switch alarms	/	/	/	/	/	/

Note: the “User” menu parameters also include **PA2**, which allows access to the "Installer" menu.
Note: for the full list of parameters, see the section "**Installer parameters**".

Installer parameters IDNext 961 P

Parameter	Description	Range	UM	Default	AP1	AP2	AP3
SEt	Regulation setpoint with range between the minimum setpoint **LSE** and the maximum setpoint **HSE**. The setpoint value is set in the "Machine status" menu.	**LSE**...**HSE**	°C/°F	3.0	3.0	0.0	0.0
CP (Compressor)							
diF	Compressor relay activation differential; the compressor stops when reaching the entered setpoint (upon indication of the regulation probe) and restarts at a temperature value equal to the setpoint plus the value of the differential. **Note**: always a value other than 0.	0.1...30.0	°C/°F	2.0	2.0	2.0	2.0
LSE	Minimum setpoint value	-67.0...**HSE**	°C/°F	-55.0	-55.0	-55.0	-55.0
HSE	Maximum setpoint value	**LSE**...302	°C/°F	140.0	140.0	140	140
HC	The regulator will execute operation for cooling (set "**C**(0)") or heating (set "**H**(1)")	C/H	flag	C	C	C	H
ont	Regulator switch-on time for faulty probe: • if **Ont** = 1 and **OFt** = 0 compressor always on • if **Ont** = 1 and **OFt** > 0 compressor in duty cycle	0...250	min	15	15	15	0
oFt	Regulator switch-off time for faulty probe: • if **OFt** = 1 and **Ont** = 0 compressor always off • if **OFt** = 1 and **Ont** > 0 compressor in duty cycle	0...250	min	15	15	15	0
don	Compressor relay activation delay time from call	0...250	s	0	0	0	0
doF	Delay time after switch-off; the indicated time must elapse between compressor relay switch-off and a subsequent switch-on.	0...250	min	0	0	0	0
dbi	Delay time between switch-ons; the indicated time must elapse between two consecutive compressor switch-ons.	0...250	min	0	0	0	0
Cit	Minimum compressor activation time before it can be deactivated. If **Cit** = 0 it is not active.	0...250	min	0	0	0	-
CAt	Maximum compressor activation time before it can be deactivated. If **CAt** = 0 it is not active.	0...250	min	0	0	0	-
odo	Output activation delay time from switching on the controller or after a power failure. **0** = not active	0...250	min	0	0	0	0
dCS	"Deep cooling cycle" setpoint	-67.0...302	°C/°F	0.0	0.0	0.0	0.0
tdC	"Deep cooling cycle" duration	0...250	min	0	0	0	0
dcc	Defrost activation delay after a "Deep cooling cycle"	0...250	min	0	0	0	0
dEF (Defrost)							
dOH	Defrost cycle activation delay from the call	0...250	min	0	0	0	0
dEt	Defrost timeout. Determines the maximum duration of the defrost	1...250	min	20	20	25	1
dPo	Defrost activation request at startup, if the temperature measured by Pb2 allows. **n**(0) = no; **y**(1) = yes	n/y	flag	n	n	n	n
tCd	Minimum period of time with the compressor ON or OFF before defrost is activated.	0...250	min	0	0	0	0
Cod	Time with the compressor OFF before defrost is activated	0...250	min	0	0	0	0

Parameter	Description	Range	UM	Default	AP1	AP2	AP3
dMr	Enables the defrost count reset in the case of manual defrosting. **n** = count reset does not take place; **y** = count reset takes place	n/y	flag	n	n	n	n
d00	Compressor running time before defrost is activated	0...250	hours	0	0	0	-
d01	Sets the unit of measure in **d00**: **0** = hours; **1** = minutes; **2** = seconds.	0/1/2	num	0	0	0	-
dit	Time interval between one defrost and the next	0...250	hours	6	6	6	0
d11	Sets the unit of measure in **dit**. **0** = hours; **1** = minutes; **2** = seconds.	0/1/2	num	0	0	0	-
d20	Can be used to activate the defrost when the compressor is off. • **0** = disabled. Defrost is not activated. • **1** = enabled. Defrost is activated when the compressor is off.	0/1	flag	0	0	0	-
AL (Alarms)							
Att	Sets the absolute or relative value for parameters **HAL** and **LAL**. **0** = absolute value **1** = relative value	0/1	flag	0	0	0	0
AFd	Alarm differential.	0.1...25.0	°C/°F	2.0	2.0	2.0	2.0
HAL	Maximum temperature alarm. Temperature value (in a relative value) which, when exceeded, will lead to the activation of alarm signaling.	**LAL**...302	°C/°F	150.0	150.0	150.0	150.0
LAL	Minimum temperature alarm. Temperature value (in a relative value) which, when not reached, will lead to the activation of alarm signaling.	-67.0...**HAL**	°C/°F	-50.0	-50.0	-50.0	-50.0
PAo	Alarm exclusion time when switching on the controller, after a power failure.	0...10	hours	0	0	0	0
dAo	Temperature alarm exclusion time after defrosting.	0...250	min	0	0	0	0
oAo	Alarm signaling delay after deactivation of the digital input (door closure). Alarm refers to high and low temperature alarms.	0...10	hours	0	0	0	0
tdO	Door open alarm activation delay time.	0...250	min	0	0	0	0
tAo	Temperature alarm signaling delay time.	0...250	min	0	0	0	0
dAt	Defrost ended due to timeout alarm indication. **n**(0) = does not activate alarm; **y**(1) = activates alarm.	n/y	flag	0	0	0	0
EAL	An external alarm inhibits the regulators. **0** = regulators not inhibited; **1** = compressor and defrost inhibited; **2** = fans, compressor and defrost inhibited;	0/1/2	flag	n	n	n	n
SA3	Probe 3 alarm setpoint.	-67.0...302	°C/°F	0.0	0.0	0.0	0.0
dA3	Probe 3 alarm differential.	0.1...30.0	°C/°F	1.0	1.0	1.0	1.0
rFt	Low refrigerant alarm signaling delay.	0...250	min	0 (not in applications)			
Lit (Lights and digital inputs)							
dOd	Digital input shuts off utilities: **0** = disabled; **1** = fans disabled; **2** = compressor disabled; **3** = fans and compressor disabled.	0...3	num	0	0	0	-
dAd	Digital input activation delay	0...250	min	0	0	0	-
dCO	Compressor activation delay from acknowledgment	0...250	min	1	1	1	-
PrE (Pressure switch)							
Pen	Number of errors permitted per minimum/maximum pressure switch input	0...15	num	0	0	0	0

Parameter	Description	Range	UM	Default	AP1	AP2	AP3
PEi	Minimum/maximum pressure switch error count interval	1...99	min	1	1	1	1
PEt	Compressor activation delay after pressure switch deactivation	0...255	min	0	0	0	0
EnS (Energy Saving)							
oSP	Temperature value to be added to the setpoint in the case of an enabled reduced set (Economy function)	-30.0...30.0	°C/°F	0.0	0.0	0.0	0.0
OdF	Differential offset during an energy saving cycle or reduced set	0.1...30.0	°C/°F	2.0	2.0	2.0	2.0
Add (Communication)							
Adr	Modbus protocol controller address.	1...247	flag	1 (not in applications)			
bAU	Modbus Baudrate selection. **96** (0) = 9600; **192** (1) = 19200; **384** (2) = 38400	96/192/384	num	96 (not in applications)			
Pty	Modbus parity bit. **n**(0) = none; **E**(1) = even; **o**(2) = odd.	n/E/o	num	E (not in applications)			
diS (Display)							
dro	Selects the unit of measure used when displaying the temperature read by the probes. (**0** = °C, **1** = °F). **Note**: changing from °C to °F or vice-versa does NOT change the **SEt**, **diF** values, etc. (example: **SEt** = 10°C becomes 10°F).	0/1	flag	0	0	0	0
CA1	Positive or negative temperature value to be added to the value of Pb1.	-30.0...30.0	°C/°F	0.0	0.0	0.0	0.0
CA3	Positive or negative temperature value to be added to the value of Pb3.	-30.0...30.0	°C/°F	0.0	0.0	0.0	0.0
CAi	Activation of the calibration value. **0** = Adds the value to the temperature value displayed; **1** = Adds the value to the temperature used by the regulators and not to the one displayed; **2** = Adds the value to the temperature used by the regulators and to the temperature displayed.	0/1/2	num	2	2	2	2
LoC	Keypad lock. **n**(0) = Keypad lock disabled **y**(1) = Keypad lock enabled (On startup or when 30 seconds have passed since the last action carried out on the user interface).	n/y	flag	y	y	y	y
ddd	Selects the type of value to show on the display. **0** = setpoint; **1** = probe Pb1 ; **2** = probe Pb2 ; **3** = probe Pb3.	0...3	num	1	1	1	1
ddL	Display mode during defrosting. **0** = displays the temperature read by Pb1; **1** = inhibits reading on the value of Pb1 at the start of defrost and until the setpoint is reached; **2** = displays the label **dEF** during the defrost until the setpoint is reached.	0/1/2	num	0	0	0	0
Ldd	Display unlock timeout value - label **dEF**	0...250	min	30	30	30	30
ndt	Display with decimal point. **n**(0) = no; **y**(1) = yes.	n/y	flag	y	y	y	y
FSE	Sets the value (COEFF) used by the low-pass filter to calculate the temperature value to be displayed. **0** = deactivated; **1** = 200; **2** = 100; **3** = 50; **4** = 25; **5** = 12; **6** = 6; **7** = 3.	0...7	num	0	0	0	0
FdS	Filter disabling threshold.	-67.0...302	°C/°F	0	0	0	0
Ftt	Time that has passed beyond the value of **FdS** before the filter is disabled.	0...250	min	0	0	0	0
FHt	Filter sampling interval.	1...250	s	1	1	1	1

Parameter	Description	Range	UM	Default	AP1	AP2	AP3
PS1	When enabled (**PS1**≠0) this is the access key for the user parameters.	0...250	num	0	0	0	0
PS2	When enabled (**PS2**≠0) this is the access key for the installer parameters.	0...250	num	15	15	15	15
CnF (Configuration)							
H00	Selects the probe type. **0** = PTC; **1** = NTC; **2** = Pt1000.	0/1/2	flag	1	1	1	1
H08	Stand-by operating mode. **0** = display off; the regulators are active and the device signals any alarms by reactivating the display; **1** = display off; the regulators and alarms are inhibited; **2** = the display shows the label "OFF"; the regulators and alarms are inhibited.	0/1/2	num	2	2	2	2
H11	Digital input 1/polarity configuration: **0** = disabled; **±**1 = defrost; **±2** = reduced set; **±3** = auxiliary; **±4** = door switch; **±5** = external alarm; **±6** = stand-by; **±7** = pressure switch; **±8** = deep cooling (DCC); **±9** = light; **±10** = energy saving. **Note**: • the "+" sign indicates that the input is active if the contact is closed. • the "-" sign indicates that the input is active if the contact is open.	-10...+10	num	0	0	0	0
H21	Configuration of digital output 1 (**Out1**): **0** = disabled; **1** = compressor; **2** = defrost; **3** = evaporator fan; **4** = alarm; **5** = auxiliary; **6** = stand-by; **7** = light; **8** = buzzer; **9** = compressor 2; **10** = evaporator 2 defrost; **11** = condenser fans; **12** = heater deadband control; **13** = variable speed compressor (VSC).	0...13	num	1	1	1	1
H31	△ key configuration. **0** = disabled; **1** = defrost; **2** = auxiliary; **3** = reduced set; **4** = stand-by; **5** = not used **6** = not used; **7** = deep cooling (DCC); **8** = light.	0...8	num	1	1	1	1
H32	▽ key configuration. Same as **H31**.	0...8	num	0	0	0	0
H33	⏻ key configuration. Same as **H31**.	0...8	num	4	4	4	4
H43	Probe Pb3 present. **n**(0) = not present; **y**(1) = present; **2EP**(2) = second evaporator.	n/y/2EP	flag	n	n	n	n
H60	Display selected application. **0** = disabled; **1** = AP1; **2** = AP2; **3** = AP3.	0...3	num	1 (not in applications)			
tAb	Reserved: read-only parameter.	/	/	/	/	/	/
FPr (UNICARD)							
UL	Transfer of the programming parameters from the device to the UNICARD	/	/	/ (not in applications)			
Fr	UNICARD formatting. Deletes all data on the UNICARD. **Note**: the use of parameter **Fr** results in the loss of all data entered. This operation cannot be reversed.	/	/	/ (not in applications)			
FnC (Functions)							
rAP	Reset pressure switch alarms	/	/	/	/	/	/

Note: if one or more parameters in folder **CnF** or marked with **(!)** are changed, the controller must be switched off and then on again to make sure it works properly.

Parameters IDNext 971 P/B

User parameters IDNext 971 P/B

Parameter	Description	Range	UM	Default	AP1	AP2	AP3
SEt	Regulation setpoint with range between the minimum setpoint **LSE** and the maximum setpoint **HSE**. The setpoint value is set in the "Machine status" menu.	**LSE**...**HSE**	°C/°F	3.0	3.0	0.0	-18.0
diF	Compressor relay activation differential; the compressor stops when reaching the entered setpoint (upon indication of the regulation probe) and restarts at a temperature value equal to the setpoint plus the value of the differential. **Note**: always a value other than 0.	0.1...30.0	°C/°F	2.0	2.0	2.0	2.0
LSE	Minimum setpoint value	-67.0...**HSE**	°C/°F	-55.0	-55.0	-55.0	-55.0
HSE	Maximum setpoint value	**LSE**...302	°C/°F	140.0	140.0	140	140
dEt	Defrost timeout. Determines the maximum duration of the defrost	1...250	min	20	20	25	25
dS1	Evaporator 1 defrost end temperature (measured by probe Pb2)	-67.0...302	°C/°F	8.0	8.0	8.0	8.0
dit	Time interval between one defrost and the next	0...250	hours	6	6	6	6
FSt	Fan disabling temperature; a value, read by the evaporator probe.	-67.0...320	°C/°F	2.0	2.0	2.0	2.0
Fdt	Fan activation delay time after a defrost.	0...250	min	0	0	0	0
dt	Dripping time.	0...250	min	5	5	5	5
dFd	Used to select or deselect the exclusion of the evaporator fans during defrosting. **n**(0) = no; **y** (1) = yes (fan excluded or off).	n/y	flag	y	y	y	y
HAL	Maximum temperature alarm. Temperature value (in a relative value) which, when exceeded, will lead to the activation of alarm signaling.	**LAL**...302	°C/°F	150.0	150.0	150.0	150.0
LAL	Minimum temperature alarm. Temperature value (in a relative value) which, when not reached, will lead to the activation of alarm signaling.	-67.0...**HAL**	°C/°F	-50.0	-50.0	-50.0	-50.0
rFt	Low refrigerant alarm signaling delay.	0...250	min	0 (not in applications)			
CA1	Positive or negative temperature value to be added to the value of Pb1.	-30.0...30.0	°C/°F	0.0	0.0	0.0	0.0
CA2	Positive or negative temperature value to be added to the value of Pb2.	-30.0...30.0	°C/°F	0.0	0.0	0.0	0.0
PS1	When enabled (**PS1**≠0) this is the access key for the user parameters.	0...250	num	0	0	0	0
H42	Evaporator probe presence. **n**(0) = not present; **y**(1) = present.	n/y	flag	y	y	y	y
tAb	Reserved: read-only parameter.	/	/	/	/	/	/
rAP	Reset pressure switch alarms	/	/	/	/	/	/

Note: the “User” menu parameters also include **PA2**, which allows access to the "Installer" menu.
Note: for the full list of parameters, see the section "**Installer parameters**".

Installer parameters IDNext 971 P/B

Parameter	Description	Range	UM	Default	AP1	AP2	AP3
SEt	Regulation setpoint with range between the minimum setpoint **LSE** and the maximum setpoint **HSE**. The setpoint value is set in the "Machine status" menu.	**LSE**...**HSE**	°C/°F	3.0	3.0	0.0	-18.0
CP (Compressor)							
diF	Compressor relay activation differential; the compressor stops when reaching the entered setpoint (upon indication of the regulation probe) and restarts at a temperature value equal to the setpoint plus the value of the differential. **Note**: always a value other than 0.	0.1...30.0	°C/°F	2.0	2.0	2.0	2.0
LSE	Minimum setpoint value	-67.0...**HSE**	°C/°F	-55.0	-55.0	-55.0	-55.0
HSE	Maximum setpoint value	**LSE**...302	°C/°F	140.0	140.0	140	140
HC	The regulator will execute operation for cooling (set "**C**(0)") or heating (set "**H**(1)")	C/H	flag	C	C	C	C
ont	Regulator switch-on time for faulty probe: • if **Ont** = 1 and **OFt** = 0 compressor always on • if **Ont** = 1 and **OFt** > 0 compressor in duty cycle	0...250	min	15	15	15	15
oFt	Regulator switch-off time for faulty probe: • if **OFt** = 1 and **Ont** = 0 compressor always off • if **OFt** = 1 and **Ont** > 0 compressor in duty cycle	0...250	min	15	15	15	15
don	Compressor relay activation delay time from call	0...250	s	0	0	0	0
doF	Delay time after switch-off; the indicated time must elapse between compressor relay switch-off and a subsequent switch-on.	0...250	min	0	0	0	0
dbi	Delay time between switch-ons; the indicated time must elapse between two consecutive compressor switch-ons.	0...250	min	0	0	0	0
Cit	Minimum compressor activation time before it can be deactivated. If **Cit** = 0 it is not active.	0...250	min	0	0	0	0
CAt	Maximum compressor activation time before it can be deactivated. If **CAt** = 0 it is not active.	0...250	min	0	0	0	0
odo	Output activation delay time from switching on the controller or after a power failure. **0** = not active	0...250	min	0	0	0	0
dCS	"Deep cooling cycle" setpoint	-67.0...302	°C/°F	0.0	0.0	0.0	0.0
tdC	"Deep cooling cycle" duration	0...250	min	0	0	0	0
dcc	Defrost activation delay after a "Deep cooling cycle"	0...250	min	0	0	0	0
dEF (Defrost)							
dty	Type of defrost. **0** = electrical defrost or due to stoppage - compressor OFF during defrost; **1** = cycle inversion (hot gas) defrost; compressor on during defrost; **2** = defrost with "Free" mode; defrost independent of the compressor.	0/1/2	num	0	0	0	0
dOH	Defrost cycle activation delay from the call	0...250	min	0	0	0	0
dEt	Defrost timeout. Determines the maximum duration of the defrost	1...250	min	20	20	25	25
dS1	Evaporator 1 defrost end temperature (measured by probe Pb2)	-67.0...302	°C/°F	8.0	8.0	8.0	8.0

Parameter	Description	Range	UM	Default	AP1	AP2	AP3
dPo	Defrost activation request at startup, if the temperature measured by Pb2 allows. **n**(0) = no; **y**(1) = yes	n/y	flag	n	n	n	n
tCd	Minimum period of time with the compressor ON or OFF before defrost is activated.	0...250	min	0	0	0	0
Cod	Time with the compressor OFF before defrost is activated	0...250	min	0	0	0	0
dMr	Enables the defrost count reset in the case of manual defrosting. **n** = count reset does not take place; **y** = count reset takes place	n/y	flag	n	n	n	n
d00	Compressor running time before defrost is activated	0...250	hours	0	0	0	0
d01	Sets the unit of measure in **d00**: **0** = hours; **1** = minutes; **2** = seconds.	0/1/2	num	0	0	0	0
dit	Time interval between one defrost and the next	0...250	hours	6	6	6	6
d11	Sets the unit of measure in **dit**. **0** = hours; **1** = minutes; **2** = seconds.	0/1/2	num	0	0	0	0
d20	Can be used to activate the defrost when the compressor is off. • **0** = disabled. Defrost is not activated. • **1** = enabled. Defrost is activated when the compressor is off.	0/1	flag	0	0	0	0
d40	Enables/disables use of probe Pb2. • **0** = disabled. Defrost does not take Pb2 into account. • **1** = enabled. Defrost runs according to the value read by Pb2 (refers only to the defrost with threshold)	0/1	flag	0	0	0	0
d41	Sets the defrost activation threshold	-67.0...302	°C/°F	0	0	0	0
d42	Sets the maximum time for which the evaporator can remain under the threshold **d41**	0...250	min	0	0	0	0
d43	Sets the type of time count in which the evaporator temperature remains under the threshold value. • **0** = count independent of the compressor status • **1** = count with compressor on (when the compressor is off the count begins again) • **2** = count independent of the compressor status. The count stops when the temperature rises above the threshold **d41** • **3** = count with compressor on and until the temperature rises above the threshold **d41**	0...3	num	0	0	0	0
d44	Sets the threshold management mode. • **0** = absolute value (for example: **d41** = -25°C means that the threshold temperature is exactly -25°C) • **1** = relative value (negative offset, relative to the value measured by the defrost probe Pb2 (if **d40** = 1) at the end of the first cooling cycle or on startup)	0/1	flag	0	0	0	0
Fan							
FPt	Sets whether parameter **FSt** is expressed as an absolute temperature value or as a value relative to the Setpoint. **0** = absolute; **1** = relative.	0/1	flag	0.0	0.0	0.0	0.0
FSt	Fan disabling temperature; a value, read by the evaporator probe.	-67.0...320	°C/°F	2.0	2.0	2.0	2.0

<table>
<tr><th>Parameter</th><th>Description</th><th>Range</th><th>UM</th><th>Default</th><th>AP1</th><th>AP2</th><th>AP3</th></tr>
<tr><td>FAd</td><td>Evaporator fan activation differential (parameter FSt).</td><td>1.0...25.0</td><td>°C/°F</td><td>2.0</td><td>2.0</td><td>2.0</td><td>2.0</td></tr>
<tr><td>Fdt</td><td>Fan activation delay time after a defrost.</td><td>0...250</td><td>min</td><td>0</td><td>0</td><td>0</td><td>0</td></tr>
<tr><td>dt</td><td>Dripping time.</td><td>0...250</td><td>min</td><td>5</td><td>5</td><td>5</td><td>5</td></tr>
<tr><td>dFd</td><td>Used to select or deselect the exclusion of the evaporator fans during defrosting. n(0) = no; y (1) = yes (fan excluded or off).</td><td>n/y</td><td>flag</td><td>y</td><td>y</td><td>y</td><td>y</td></tr>
<tr><td>FCo</td><td>Evaporator fan operating mode.
<table>
<tr><th rowspan="2">Pb2</th><th rowspan="2">H42</th><th rowspan="2">FCo</th><th colspan="2">day</th><th colspan="2">night</th></tr>
<tr><th>Cn</th><th>Cf</th><th>Cn</th><th>Cf</th></tr>
<tr><td rowspan="4">ok</td><td rowspan="4">y</td><td>0</td><td>T</td><td>Off</td><td>T</td><td>Off</td></tr>
<tr><td>1</td><td>T</td><td>T</td><td>T</td><td>T</td></tr>
<tr><td>2</td><td>T</td><td>DCd</td><td>T</td><td>DCn</td></tr>
<tr><td>3</td><td>T</td><td>DCd</td><td>T</td><td>DCn</td></tr>
<tr><td rowspan="4">ko</td><td rowspan="4">y</td><td>0</td><td>On</td><td>Off</td><td>On</td><td>Off</td></tr>
<tr><td>1</td><td>On</td><td>On</td><td>On</td><td>On</td></tr>
<tr><td>2</td><td>On</td><td>DCd</td><td>On</td><td>DCn</td></tr>
<tr><td>3</td><td>On</td><td>DCd</td><td>On</td><td>DCn</td></tr>
<tr><td rowspan="4">no</td><td rowspan="4">n</td><td>0</td><td>On</td><td>Off</td><td>On</td><td>Off</td></tr>
<tr><td>1</td><td>On</td><td>On</td><td>On</td><td>On</td></tr>
<tr><td>2</td><td>On</td><td>DCd</td><td>On</td><td>DCn</td></tr>
<tr><td>3</td><td>On</td><td>DCd</td><td>On</td><td>DCn</td></tr>
</table>
Headings legend:
Pb2 = probe Pb2 status (ok = present; ko = in E2 error and no = absent; day = day mode; night = night mode; Cn = compressor on; Cf = compressor off.
Status legend:
T = thermostat controlled fans; On = fans on; Off= fans off; DCd = Day duty cycle or DCn = Night duty cycle.</td><td>0...3</td><td>num</td><td>1</td><td>1</td><td>1</td><td>1</td></tr>
<tr><td>Fon</td><td>Day duty cycle: time with fans on.</td><td>0...250</td><td>min</td><td>0</td><td>0</td><td>0</td><td>0</td></tr>
<tr><td>FoF</td><td>Day duty cycle: time with fans off.</td><td>0...250</td><td>min</td><td>0</td><td>0</td><td>0</td><td>0</td></tr>
<tr><td>Fnn</td><td>Night duty cycle: time with fans on.</td><td>0...250</td><td>min</td><td>0</td><td>0</td><td>0</td><td>0</td></tr>
<tr><td>FnF</td><td>Night duty cycle: time with fans off.</td><td>0...250</td><td>min</td><td>0</td><td>0</td><td>0</td><td>0</td></tr>
<tr><td>ESF</td><td>"Night" mode activation. n(0) = no; y(1) = yes.</td><td>n/y</td><td>flag</td><td>n</td><td>n</td><td>n</td><td>n</td></tr>
<tr><td colspan="8">AL (Alarms)</td></tr>
<tr><td>Att</td><td>Sets the absolute or relative value for parameters HAL and LAL.
0 = absolute value
1 = relative value</td><td>0/1</td><td>flag</td><td>0</td><td>0</td><td>0</td><td>0</td></tr>
<tr><td>AFd</td><td>Alarm differential.</td><td>0.1...25.0</td><td>°C/°F</td><td>2.0</td><td>2.0</td><td>2.0</td><td>2.0</td></tr>
<tr><td>HAL</td><td>Maximum temperature alarm.
Temperature value (in a relative value) which, when exceeded, will lead to the activation of alarm signaling.</td><td>LAL...302</td><td>°C/°F</td><td>150.0</td><td>150.0</td><td>150.0</td><td>150.0</td></tr>
<tr><td>LAL</td><td>Minimum temperature alarm.
Temperature value (in a relative value) which, when not reached, will lead to the activation of alarm signaling.</td><td>-67.0...HAL</td><td>°C/°F</td><td>-50.0</td><td>-50.0</td><td>-50.0</td><td>-50.0</td></tr>
<tr><td>PAo</td><td>Alarm exclusion time when switching on the controller, after a power failure.</td><td>0...10</td><td>hours</td><td>0</td><td>0</td><td>0</td><td>0</td></tr>
<tr><td>dAo</td><td>Temperature alarm exclusion time after defrosting.</td><td>0...250</td><td>min</td><td>0</td><td>0</td><td>0</td><td>0</td></tr>
</table>

Parameter	Description	Range	UM	Default	AP1	AP2	AP3
oAo	Alarm signaling delay after deactivation of the digital input (door closure). Alarm refers to high and low temperature alarms.	0...10	hours	0	0	0	0
tdO	Door open alarm activation delay time.	0...250	min	0	0	0	0
tAo	Temperature alarm signaling delay time.	0...250	min	0	0	0	0
dAt	Defrost ended due to timeout alarm indication. **n**(0) = does not activate alarm; **y**(1) = activates alarm.	n/y	flag	0	0	0	0
EAL	An external alarm inhibits the regulators. **0** = regulators not inhibited; **1** = compressor and defrost inhibited; **2** = fans, compressor and defrost inhibited;	0/1/2	flag	n	n	n	n
SA3	Probe 3 alarm setpoint.	-67.0...302	°C/°F	0.0	0.0	0.0	0.0
dA3	Probe 3 alarm differential.	0.1...30.0	°C/°F	1.0	1.0	1.0	1.0
rFt	Low refrigerant alarm signaling delay.	0...250	min	0 (not in applications)			
Lit (Lights and digital inputs)							
dOd	Digital input shuts off utilities: **0** = disabled; **1** = fans disabled; **2** = compressor disabled; **3** = fans and compressor disabled.	0...3	num	0	0	0	0
dAd	Digital input activation delay	0...250	min	0	0	0	0
dCO	Compressor activation delay from acknowledgment	0...250	min	1	1	1	1
PrE (Pressure switch)							
Pen	Number of errors permitted per minimum/maximum pressure switch input	0...15	num	0	0	0	0
PEi	Minimum/maximum pressure switch error count interval	1...99	min	1	1	1	1
PEt	Compressor activation delay after pressure switch deactivation	0...255	min	0	0	0	0
EnS (Energy Saving)							
oSP	Temperature value to be added to the setpoint in the case of an enabled reduced set (Economy function)	-30.0...30.0	°C/°F	0.0	0.0	0.0	0.0
OdF	Differential offset during an energy saving cycle or reduced set	0.1...30.0	°C/°F	2.0	2.0	2.0	2.0
Add (Communication)							
Adr	Modbus protocol controller address.	1...247	flag	1 (not in applications)			
bAU	Modbus Baudrate selection. **96** (0) = 9600; **192** (1) = 19200; **384** (2) = 38400	96/192/384	num	96 (not in applications)			
Pty	Modbus parity bit. **n**(0) = none; **E**(1) = even; **o**(2) = odd.	n/E/o	num	E (not in applications)			
diS (Display)							
dro	Selects the unit of measure used when displaying the temperature read by the probes. (**0** = °C, **1** = °F). **Note**: changing from °C to °F or vice-versa does NOT change the **SEt**, **diF** values, etc. (example: **SEt** = 10°C becomes 10°F).	0/1	flag	0	0	0	0
CA1	Positive or negative temperature value to be added to the value of Pb1.	-30.0...30.0	°C/°F	0.0	0.0	0.0	0.0
CA2	Positive or negative temperature value to be added to the value of Pb2.	-30.0...30.0	°C/°F	0.0	0.0	0.0	0.0
CAi	Activation of the calibration value. **0** = Adds the value to the temperature value displayed; **1** = Adds the value to the temperature used by the regulators and not to the one displayed; **2** = Adds the value to the temperature used by the regulators and to the temperature displayed.	0/1/2	num	2	2	2	2

Parameter	Description	Range	UM	Default	AP1	AP2	AP3
LoC	Keypad lock. **n**(0) = Keypad lock disabled **y**(1) = Keypad lock enabled (On startup or when 30 seconds have passed since the last action carried out on the user interface).	n/y	flag	y	y	y	y
ddd	Selects the type of value to show on the display. **0** = setpoint; **1** = probe Pb1 ; **2** = probe Pb2 ; **3** = probe Pb3.	0...3	num	1	1	1	1
ddL	Display mode during defrosting. **0** = displays the temperature read by Pb1; **1** = inhibits reading on the value of Pb1 at the start of defrost and until the setpoint is reached; **2** = displays the label **dEF** during the defrost until the setpoint is reached.	0/1/2	num	0	0	0	0
Ldd	Display unlock timeout value - label **dEF**	0...250	min	30	30	30	30
ndt	Display with decimal point. **n**(0) = no; **y**(1) = yes.	n/y	flag	y	y	y	y
FSE	Sets the value (COEFF) used by the low-pass filter to calculate the temperature value to be displayed. **0** = deactivated; **1** = 200; **2** = 100; **3** = 50; **4** = 25; **5** = 12; **6** = 6; **7** = 3.	0...7	num	0	0	0	0
FdS	Filter disabling threshold.	-67.0...302	°C/°F	0	0	0	0
Ftt	Time that has passed beyond the value of **FdS** before the filter is disabled.	0...250	min	0	0	0	0
FHt	Filter sampling interval.	1...250	s	1	1	1	1
PS1	When enabled (**PS1**≠0) this is the access key for the user parameters.	0...250	num	0	0	0	0
PS2	When enabled (**PS2**≠0) this is the access key for the installer parameters.	0...250	num	15	15	15	15
CnF (Configuration)							
H00	Selects the probe type. **0** = PTC; **1** = NTC; **2** = Pt1000.	0/1/2	flag	1	1	1	1
H08	Stand-by operating mode. **0** = display off; the regulators are active and the device signals any alarms by reactivating the display; **1** = display off; the regulators and alarms are inhibited; **2** = the display shows the label “OFF”; the regulators and alarms are inhibited.	0/1/2	num	2	2	2	2
H11	Digital input 1/polarity configuration: **0** = disabled; **±1** = defrost; **±2** = reduced set; **±3** = auxiliary; **±4** = door switch; **±5** = external alarm; **±6** = stand-by; **±7** = pressure switch; **±8** = deep cooling (DCC); **±9** = light; **±10** = energy saving. **Note**: • the “+” sign indicates that the input is active if the contact is closed. • the “-” sign indicates that the input is active if the contact is open.	-10...+10	num	0	0	0	0
H21	Configuration of digital output 1 (**Out1**): **0** = disabled; **1** = compressor; **2** = defrost; **3** = evaporator fan; **4** = alarm; **5** = auxiliary; **6** = stand-by; **7** = light; **8** = buzzer; **9** = compressor 2; **10** = evaporator 2 defrost; **11** = condenser fans; **12** = heater deadband control; **13** = variable speed compressor (VSC).	0...13	num	1	1	1	1

Parameter	Description	Range	UM	Default	AP1	AP2	AP3
H22	Configuration of digital output 2 (**Out2**). Same as **H21**. **0** = disabled; **1** = compressor; **2** = defrost; **3** = evaporator fan; **4** = alarm; **5** = auxiliary; **6** = stand-by; **7** = light; **8** = buzzer; **9** = compressor 2; **10** = evaporator 2 defrost; **11** = condenser fans; **12** = heater deadband control.	0...12	num	2	2	2	2
H25	Enables/disables the buzzer. **0** = disabled; **1** = enabled.	0/1	flag	1	1	1	1
H31	△ key configuration. **0** = disabled; **1** = defrost; **2** = auxiliary; **3** = reduced set; **4** = stand-by; **5** = not used **6** = not used; **7** = deep cooling (DCC); **8** = light.	0...8	num	1	1	1	1
H32	▽ key configuration. Same as **H31**.	0...8	num	0	0	0	0
H33	⏻ key configuration. Same as **H31**.	0...8	num	4	4	4	4
H34	💡 key configuration. Same as **H31**.	0...8	num	0	0	0	0
H35	☆ key configuration. Same as **H31**.	0...8	num	0	0	0	0
H42	Evaporator probe presence. **n**(0) = not present; **y**(1) = present.	n/y	flag	y	y	y	y
H60	Display selected application. **0** = disabled; **1** = AP1; **2** = AP2; **3** = AP3.	0...3	num	1 (not in applications)			
tAb	Reserved: read-only parameter.	/	/	/	/	/	/
FPr (UNICARD)							
UL	Transfer of the programming parameters from the device to the UNICARD	/	/	/ (not in applications)			
Fr	UNICARD formatting. Deletes all data on the UNICARD. **Note**: the use of parameter **Fr** results in the loss of all data entered. This operation cannot be reversed.	/	/	/ (not in applications)			
FnC (Functions)							
rAP	Reset pressure switch alarms	/	/	/	/	/	/

Note: if one or more parameters in folder **CnF** or marked with **(!)** are changed, the controller must be switched off and then on again to make sure it works properly.

Parameters IDNext 974 P/B

User parameters IDNext 974 P/B

Parameter	Description	Range	UM	Default	AP1	AP2	AP3
SEt	Regulation setpoint with range between the minimum setpoint **LSE** and the maximum setpoint **HSE**. The setpoint value is set in the "Machine status" menu.	**LSE**...**HSE**	°C/°F	3.0	3.0	0.0	-18.0
diF	Compressor relay activation differential; the compressor stops when reaching the entered setpoint (upon indication of the regulation probe) and restarts at a temperature value equal to the setpoint plus the value of the differential. **Note**: always a value other than 0.	0.1...30.0	°C/°F	2.0	2.0	2.0	2.0
LSE	Minimum setpoint value	-67.0...**HSE**	°C/°F	-55.0	-55.0	-55.0	-55.0
HSE	Maximum setpoint value	**LSE**...302	°C/°F	140.0	140.0	140	140
dEt	Defrost timeout. Determines the maximum duration of the defrost	1...250	min	20	20	25	25
dS1	Evaporator 1 defrost end temperature (measured by probe Pb2)	-67.0...302	°C/°F	8.0	8.0	8.0	8.0
dit	Time interval between one defrost and the next	0...250	hours	6	6	6	6
FSt	Fan disabling temperature; a value, read by the evaporator probe.	-67.0...320	°C/°F	2.0	2.0	2.0	2.0
Fdt	Fan activation delay time after a defrost.	0...250	min	0	0	0	0
dt	Dripping time.	0...250	min	5	5	5	5
dFd	Used to select or deselect the exclusion of the evaporator fans during defrosting. **n**(0) = no; **y**(1) = yes (fan excluded or off).	n/y	flag	y	y	y	y
HAL	Maximum temperature alarm. Temperature value (in a relative value) which, when exceeded, will lead to the activation of alarm signaling.	**LAL**...302	°C/°F	150.0	150.0	150.0	150.0
LAL	Minimum temperature alarm. Temperature value (in a relative value) which, when not reached, will lead to the activation of alarm signaling.	-67.0...**HAL**	°C/°F	-50.0	-50.0	-50.0	-50.0
rFt	Low refrigerant alarm signaling delay.	0...250	min	0 (not in applications)			
CA1	Positive or negative temperature value to be added to the value of Pb1.	-30.0...30.0	°C/°F	0.0	0.0	0.0	0.0
CA2	Positive or negative temperature value to be added to the value of Pb2.	-30.0...30.0	°C/°F	0.0	0.0	0.0	0.0
PS1	When enabled (**PS1**≠0) this is the access key for the user parameters.	0...250	num	0	0	0	0
H42	Evaporator probe presence. **n**(0) = not present; **y**(1) = present.	n/y	flag	y	y	y	y
tAb	Reserved: read-only parameter.	/	/	/	/	/	/
rAP	Reset pressure switch alarms	/	/	/	/	/	/

Note: the “User” menu parameters also include **PA2**, which allows access to the "Installer" menu.
Note: for the full list of parameters, see the section "**Installer parameters**".

Installer parameters IDNext 974 P/B

Parameter	Description	Range	UM	Default	AP1	AP2	AP3
SEt	Regulation setpoint with range between the minimum setpoint **LSE** and the maximum setpoint **HSE**. The setpoint value is set in the "Machine status" menu.	**LSE**...**HSE**	°C/°F	3.0	3.0	0.0	-18.0
CP (Compressor)							
diF	Compressor relay activation differential; the compressor stops when reaching the entered setpoint (upon indication of the regulation probe) and restarts at a temperature value equal to the setpoint plus the value of the differential. **Note**: always a value other than 0.	0.1...30.0	°C/°F	2.0	2.0	2.0	2.0
LSE	Minimum setpoint value	-67.0...**HSE**	°C/°F	-55.0	-55.0	-55.0	-55.0
HSE	Maximum setpoint value	**LSE**...302	°C/°F	140.0	140.0	140	140
HC	The regulator will execute operation for cooling (set "**C**(0)") or heating (set "**H**(1)")	C/H	flag	C	C	C	C
ont	Regulator switch-on time for faulty probe: • if **Ont** = 1 and **OFt** = 0 compressor always on • if **Ont** = 1 and **OFt** > 0 compressor in duty cycle	0...250	min	15	15	15	15
oFt	Regulator switch-off time for faulty probe: • if **OFt** = 1 and **Ont** = 0 compressor always off • if **OFt** = 1 and **Ont** > 0 compressor in duty cycle	0...250	min	15	15	15	15
don	Compressor relay activation delay time from call	0...250	s	0	0	0	0
doF	Delay time after switch-off; the indicated time must elapse between compressor relay switch-off and a subsequent switch-on.	0...250	min	0	0	0	0
dbi	Delay time between switch-ons; the indicated time must elapse between two consecutive compressor switch-ons.	0...250	min	0	0	0	0
Cit	Minimum compressor activation time before it can be deactivated. If **Cit** = 0 it is not active.	0...250	min	0	0	0	0
CAt	Maximum compressor activation time before it can be deactivated. If **CAt** = 0 it is not active.	0...250	min	0	0	0	0
odo	Output activation delay time from switching on the controller or after a power failure. **0** = not active	0...250	min	0	0	0	0
dCS	"Deep cooling cycle" setpoint	-67.0...302	°C/°F	0.0	0.0	0.0	0.0
tdC	"Deep cooling cycle" duration	0...250	min	0	0	0	0
dcc	Defrost activation delay after a "Deep cooling cycle"	0...250	min	0	0	0	0
CP2	Compressor 2 activation delay	0...250	min	0	0	0	0
dFA	Condenser fan and compressor activation delay from the request	0...250	s	0	0	0	0
dEF (Defrost)							
dty	Type of defrost. **0** = electrical defrost or due to stoppage - compressor OFF during defrost; **1** = cycle inversion (hot gas) defrost; compressor on during defrost; **2** = defrost with "Free" mode; defrost independent of the compressor.	0/1/2	num	0	0	0	0
dOH	Defrost cycle activation delay from the call	0...250	min	0	0	0	0
dEt	Defrost timeout. Determines the maximum duration of the defrost	1...250	min	20	20	25	25

Parameter	Description	Range	UM	Default	AP1	AP2	AP3
dS1	Evaporator 1 defrost end temperature (measured by probe Pb2)	-67.0...302	°C/°F	8.0	8.0	8.0	8.0
dPo	Defrost activation request at startup, if the temperature measured by Pb2 allows. **n**(0) = no; **y**(1) = yes	n/y	flag	n	n	n	n
tCd	Minimum period of time with the compressor ON or OFF before defrost is activated.	0...250	min	0	0	0	0
Cod	Time with the compressor OFF before defrost is activated	0...250	min	0	0	0	0
dMr	Enables the defrost count reset in the case of manual defrosting. **n** = count reset does not take place; **y** = count reset takes place	n/y	flag	n	n	n	n
d00	Compressor running time before defrost is activated	0...250	hours	0	0	0	0
d01	Sets the unit of measure in **d00**: **0** = hours; **1** = minutes; **2** = seconds.	0/1/2	num	0	0	0	0
dit	Time interval between one defrost and the next	0...250	hours	6	6	6	6
d11	Sets the unit of measure in **dit**. **0** = hours; **1** = minutes; **2** = seconds.	0/1/2	num	0	0	0	0
d20	Can be used to activate the defrost when the compressor is off. • **0** = disabled. Defrost is not activated. • **1** = enabled. Defrost is activated when the compressor is off.	0/1	flag	0	0	0	0
d40	Enables/disables use of probe Pb2. • **0** = disabled. Defrost does not take Pb2 into account. • **1** = enabled. Defrost runs according to the value read by Pb2 (refers only to the defrost with threshold)	0/1	flag	0	0	0	0
d41	Sets the defrost activation threshold	-67.0...302	°C/°F	0	0	0	0
d42	Sets the maximum time for which the evaporator can remain under the threshold **d41**	0...250	min	0	0	0	0
d43	Sets the type of time count in which the evaporator temperature remains under the threshold value. • **0** = count independent of the compressor status • **1** = count with compressor on (when the compressor is off the count begins again) • **2** = count independent of the compressor status. The count stops when the temperature rises above the threshold **d41** • **3** = count with compressor on and until the temperature rises above the threshold **d41**	0...3	num	0	0	0	0
d44	Sets the threshold management mode. • **0** = absolute value (for example: **d41** = -25°C means that the threshold temperature is exactly -25°C) • **1** = relative value (negative offset, relative to the value measured by the defrost probe Pb2 (if **d40** = 1) at the end of the first cooling cycle or on startup)	0/1	flag	0	0	0	0
Fan							
FPt	Sets whether parameter **FSt** is expressed as an absolute temperature value or as a value relative to the Setpoint. **0** = absolute; **1** = relative.	0/1	flag	0.0	0.0	0.0	0.0

<table>
<tr><th>Parameter</th><th>Description</th><th>Range</th><th>UM</th><th>Default</th><th>AP1</th><th>AP2</th><th>AP3</th></tr>
<tr><td>FSt</td><td>Fan disabling temperature; a value, read by the evaporator probe.</td><td>-67.0...320</td><td>°C/°F</td><td>2.0</td><td>2.0</td><td>2.0</td><td>2.0</td></tr>
<tr><td>FAd</td><td>Evaporator fan activation differential (parameter FSt).</td><td>1.0...25.0</td><td>°C/°F</td><td>2.0</td><td>2.0</td><td>2.0</td><td>2.0</td></tr>
<tr><td>Fdt</td><td>Fan activation delay time after a defrost.</td><td>0...250</td><td>min</td><td>0</td><td>0</td><td>0</td><td>0</td></tr>
<tr><td>dt</td><td>Dripping time.</td><td>0...250</td><td>min</td><td>5</td><td>5</td><td>5</td><td>5</td></tr>
<tr><td>dFd</td><td>Used to select or deselect the exclusion of the evaporator fans during defrosting. n(0) = no; y(1) = yes (fan excluded or off).</td><td>n/y</td><td>flag</td><td>y</td><td>y</td><td>y</td><td>y</td></tr>
<tr><td>FCo</td><td>Evaporator fan operating mode.
<table>
<tr><th rowspan="2">Pb2</th><th rowspan="2">H42</th><th rowspan="2">FCo</th><th colspan="2">day</th><th colspan="2">night</th></tr>
<tr><th>Cn</th><th>Cf</th><th>Cn</th><th>Cf</th></tr>
<tr><td rowspan="4">ok</td><td rowspan="4">y</td><td>0</td><td>T</td><td>Off</td><td>T</td><td>Off</td></tr>
<tr><td>1</td><td>T</td><td>T</td><td>T</td><td>T</td></tr>
<tr><td>2</td><td>T</td><td>DCd</td><td>T</td><td>DCn</td></tr>
<tr><td>3</td><td>T</td><td>DCd</td><td>T</td><td>DCn</td></tr>
<tr><td rowspan="4">ko</td><td rowspan="4">y</td><td>0</td><td>On</td><td>Off</td><td>On</td><td>Off</td></tr>
<tr><td>1</td><td>On</td><td>On</td><td>On</td><td>On</td></tr>
<tr><td>2</td><td>On</td><td>DCd</td><td>On</td><td>DCn</td></tr>
<tr><td>3</td><td>On</td><td>DCd</td><td>On</td><td>DCn</td></tr>
<tr><td rowspan="4">no</td><td rowspan="4">n</td><td>0</td><td>On</td><td>Off</td><td>On</td><td>Off</td></tr>
<tr><td>1</td><td>On</td><td>On</td><td>On</td><td>On</td></tr>
<tr><td>2</td><td>On</td><td>DCd</td><td>On</td><td>DCn</td></tr>
<tr><td>3</td><td>On</td><td>DCd</td><td>On</td><td>DCn</td></tr>
</table>
Headings legend:
Pb2 = probe Pb2 status (ok = present; ko = in E2 error and no = absent; day = day mode; night = night mode; Cn = compressor on; Cf = compressor off.
Status legend:
T = thermostat controlled fans; On = fans on; Off= fans off; DCd = Day duty cycle or DCn = Night duty cycle.</td><td>0...3</td><td>num</td><td>1</td><td>1</td><td>1</td><td>1</td></tr>
<tr><td>Fon</td><td>Day duty cycle: time with fans on.</td><td>0...250</td><td>min</td><td>0</td><td>0</td><td>0</td><td>0</td></tr>
<tr><td>FoF</td><td>Day duty cycle: time with fans off.</td><td>0...250</td><td>min</td><td>0</td><td>0</td><td>0</td><td>0</td></tr>
<tr><td>Fnn</td><td>Night duty cycle: time with fans on.</td><td>0...250</td><td>min</td><td>0</td><td>0</td><td>0</td><td>0</td></tr>
<tr><td>FnF</td><td>Night duty cycle: time with fans off.</td><td>0...250</td><td>min</td><td>0</td><td>0</td><td>0</td><td>0</td></tr>
<tr><td>ESF</td><td>"Night" mode activation. n(0) = no; y(1) = yes.</td><td>n/y</td><td>flag</td><td>n</td><td>n</td><td>n</td><td>n</td></tr>
<tr><td colspan="8">AL (Alarms)</td></tr>
<tr><td>Att</td><td>Sets the absolute or relative value for parameters HAL and LAL.
0 = absolute value
1 = relative value</td><td>0/1</td><td>flag</td><td>0</td><td>0</td><td>0</td><td>0</td></tr>
<tr><td>AFd</td><td>Alarm differential.</td><td>0.1...25.0</td><td>°C/°F</td><td>2.0</td><td>2.0</td><td>2.0</td><td>2.0</td></tr>
<tr><td>HAL</td><td>Maximum temperature alarm.
Temperature value (in a relative value) which, when exceeded, will lead to the activation of alarm signaling.</td><td>LAL...302</td><td>°C/°F</td><td>150.0</td><td>150.0</td><td>150.0</td><td>150.0</td></tr>
<tr><td>LAL</td><td>Minimum temperature alarm.
Temperature value (in a relative value) which, when not reached, will lead to the activation of alarm signaling.</td><td>-67.0...HAL</td><td>°C/°F</td><td>-50.0</td><td>-50.0</td><td>-50.0</td><td>-50.0</td></tr>
<tr><td>PAo</td><td>Alarm exclusion time when switching on the controller, after a power failure.</td><td>0...10</td><td>hours</td><td>0</td><td>0</td><td>0</td><td>0</td></tr>
<tr><td>dAo</td><td>Temperature alarm exclusion time after defrosting.</td><td>0...250</td><td>min</td><td>0</td><td>0</td><td>0</td><td>0</td></tr>
</table>

Parameter	Description	Range	UM	Default	AP1	AP2	AP3
oAo	Alarm signaling delay after deactivation of the digital input (door closure). Alarm refers to high and low temperature alarms.	0...10	hours	0	0	0	0
tdO	Door open alarm activation delay time.	0...250	min	0	0	0	0
tAo	Temperature alarm signaling delay time.	0...250	min	0	0	0	0
dAt	Defrost ended due to timeout alarm indication. **n**(0) = does not activate alarm; **y**(1) = activates alarm.	n/y	flag	0	0	0	0
EAL	An external alarm inhibits the regulators. **0** = regulators not inhibited; **1** = compressor and defrost inhibited; **2** = fans, compressor and defrost inhibited;	0/1/2	flag	n	n	n	n
AoP	Alarm output polarity. **0** = NO; **1** = NC.	0/1	flag	1	1	1	1
SA3	Probe 3 alarm setpoint.	-67.0...302	°C/°F	0.0	0.0	0.0	0.0
dA3	Probe 3 alarm differential.	0.1...30.0	°C/°F	1.0	1.0	1.0	1.0
rFt	Low refrigerant alarm signaling delay.	0...250	min	0 (not in applications)			
Lit (Lights and digital inputs)							
dOd	Digital input shuts off utilities: **0** = disabled; **1** = fans disabled; **2** = compressor disabled; **3** = fans and compressor disabled.	0...3	num	0	0	0	0
dAd	Digital input activation delay	0...250	min	0	0	0	0
dCO	Compressor activation delay from acknowledgment	0...250	min	0	0	0	0
AUP	Auxiliary (AUX) output activation when the door is opened.	n/y	flag	n	n	y	n
PrE (Pressure switch)							
Pen	Number of errors permitted per minimum/maximum pressure switch input	0...15	num	0	0	0	0
PEi	Minimum/maximum pressure switch error count interval	1...99	min	1	1	1	1
PEt	Compressor activation delay after pressure switch deactivation	0...255	min	0	0	0	0
EnS (Energy Saving)							
oSP	Temperature value to be added to the setpoint in the case of an enabled reduced set (Economy function)	-30.0...30.0	°C/°F	0.0	0.0	0.0	0.0
OdF	Differential offset during an energy saving cycle or reduced set	0.1...30.0	°C/°F	2.0	2.0	2.0	2.0
Add (Communication)							
Adr	Modbus protocol controller address.	1...247	flag	1 (not in applications)			
bAU	Modbus Baudrate selection. **96** (0) = 9600; **192** (1) = 19200; **384** (2) = 38400	96/192/384	num	96 (not in applications)			
Pty	Modbus parity bit. **n**(0) = none; **E**(1) = even; **o**(2) = odd.	n/E/o	num	E (not in applications)			
diS (Display)							
dro	Selects the unit of measure used when displaying the temperature read by the probes. (**0** = °C, **1** = °F). **Note**: changing from °C to °F or vice-versa does NOT change the **SEt**, **diF** values, etc. (example: **SEt** = 10°C becomes 10°F).	0/1	flag	0	0	0	0
CA1	Positive or negative temperature value to be added to the value of Pb1.	-30.0...30.0	°C/°F	0.0	0.0	0.0	0.0
CA2	Positive or negative temperature value to be added to the value of Pb2.	-30.0...30.0	°C/°F	0.0	0.0	0.0	0.0

Parameter	Description	Range	UM	Default	AP1	AP2	AP3
CAi	Activation of the calibration value. **0** = Adds the value to the temperature value displayed; **1** = Adds the value to the temperature used by the regulators and not to the one displayed; **2** = Adds the value to the temperature used by the regulators and to the temperature displayed.	0/1/2	num	2	2	2	2
LoC	Keypad lock. **n**(0) = Keypad lock disabled **y**(1) = Keypad lock enabled (On startup or when 30 seconds have passed since the last action carried out on the user interface).	n/y	flag	y	y	y	y
ddd	Selects the type of value to show on the display. **0** = setpoint; **1** = probe Pb1 ; **2** = probe Pb2 ; **3** = probe Pb3.	0...3	num	1	1	1	1
ddL	Display mode during defrosting. **0** = displays the temperature read by Pb1; **1** = inhibits reading on the value of Pb1 at the start of defrost and until the setpoint is reached; **2** = displays the label **dEF** during the defrost until the setpoint is reached.	0/1/2	num	0	0	0	0
Ldd	Display unlock timeout value - label **dEF**	0...250	min	30	30	30	30
ndt	Display with decimal point. **n**(0) = no; **y**(1) = yes.	n/y	flag	y	y	y	y
FSE	Sets the value (COEFF) used by the low-pass filter to calculate the temperature value to be displayed. **0** = deactivated; **1** = 200; **2** = 100; **3** = 50; **4** = 25; **5** = 12; **6** = 6; **7** = 3.	0...7	num	0	0	0	0
FdS	Filter disabling threshold.	-67.0...302	°C/°F	0	0	0	0
Ftt	Time that has passed beyond the value of **FdS** before the filter is disabled.	0...250	min	0	0	0	0
FHt	Filter sampling interval.	1...250	s	1	1	1	1
PS1	When enabled (**PS1**≠0) this is the access key for the user parameters.	0...250	num	0	0	0	0
PS2	When enabled (**PS2**≠0) this is the access key for the installer parameters.	0...250	num	15	15	15	15
CnF (Configuration)							
H00	Selects the probe type. **0** = PTC; **1** = NTC; **2** = Pt1000.	0/1/2	flag	1	1	1	1
H08	Stand-by operating mode. **0** = display off; the regulators are active and the device signals any alarms by reactivating the display; **1** = display off; the regulators and alarms are inhibited; **2** = the display shows the label “OFF”; the regulators and alarms are inhibited.	0/1/2	num	2	2	2	2
H11	Digital input 1/polarity configuration: **0** = disabled; **±1** = defrost; **±2** = reduced set; **±3** = auxiliary; **±4** = door switch; **±5** = external alarm; **±6** = stand-by; **±7** = pressure switch; **±8** = deep cooling (DCC); **±9** = light; **±10** = energy saving. **Note**: • the “+” sign indicates that the input is active if the contact is closed. • the “-” sign indicates that the input is active if the contact is open.	-10...+10	num	0	0	0	0

Parameter	Description	Range	UM	Default	AP1	AP2	AP3
H21	Configuration of digital output 1 (**Out1**): **0** = disabled; **1** = compressor; **2** = defrost; **3** = evaporator fan; **4** = alarm; **5** = auxiliary; **6** = stand-by; **7** = light; **8** = buzzer; **9** = compressor 2; **10** = evaporator 2 defrost; **11** = condenser fans; **12** = heater deadband control; **13** = variable speed compressor (VSC).	0...13	num	1	1	1	1
H22	Configuration of digital output 2 (**Out2**). Same as **H21**. **0** = disabled; **1** = compressor; **2** = defrost; **3** = evaporator fan; **4** = alarm; **5** = auxiliary; **6** = stand-by; **7** = light; **8** = buzzer; **9** = compressor 2; **10** = evaporator 2 defrost; **11** = condenser fans; **12** = heater deadband control.	0...12	num	2	2	2	2
H23	Configuration of digital output 3 (**Out3**). Same as **H22**.	0...12	num	3	3	3	3
H25	Enables/disables the buzzer. **0** = disabled; **1** = enabled.	0/1	flag	1	1	1	1
H31	△ key configuration. **0** = disabled; **1** = defrost; **2** = auxiliary; **3** = reduced set; **4** = stand-by; **5** = not used **6** = not used; **7** = deep cooling (DCC); **8** = light.	0...8	num	1	1	1	1
H32	▽ key configuration. Same as **H31**.	0...8	num	0	0	0	0
H33	⏻ key configuration. Same as **H31**.	0...8	num	4	4	4	4
H34	💡 key configuration. Same as **H31**.	0...8	num	0	0	0	0
H35	☆ key configuration. Same as **H31**.	0...8	num	0	0	0	0
H42	Evaporator probe presence. **n**(0) = not present; **y**(1) = present.	n/y	flag	y	y	y	y
H60	Display selected application. **0** = disabled; **1** = AP1; **2** = AP2; **3** = AP3.	0...3	num	1 (not in applications)			
tAb	Reserved: read-only parameter.	/	/	/	/	/	/
FPr (UNICARD)							
UL	Transfer of the programming parameters from the device to the UNICARD	/	/	/ (not in applications)			
Fr	UNICARD formatting. Deletes all data on the UNICARD. **Note**: the use of parameter **Fr** results in the loss of all data entered. This operation cannot be reversed.	/	/	/ (not in applications)			
FnC (Functions)							
rAP	Reset pressure switch alarms	/	/	/	/	/	/

Note: if one or more parameters in folder **CnF** or marked with **(!)** are changed, the controller must be switched off and then on again to make sure it works properly.

Parameters IDNext 974 P/C

User parameters IDNext 974 P/C

Parameter	Description	Range	UM	Default	AP1	AP2	AP3
SEt	Regulation setpoint with range between the minimum setpoint **LSE** and the maximum setpoint **HSE**. The setpoint value is set in the "Machine status" menu.	**LSE**...**HSE**	°C/°F	3.0	3.0	0.0	-18.0
diF	Compressor relay activation differential; the compressor stops when reaching the entered setpoint (upon indication of the regulation probe) and restarts at a temperature value equal to the setpoint plus the value of the differential. **Note**: always a value other than 0.	0.1...30.0	°C/°F	2.0	2.0	2.0	2.0
LSE	Minimum setpoint value	-67.0...**HSE**	°C/°F	-55.0	-55.0	-55.0	-55.0
HSE	Maximum setpoint value	**LSE**...302	°C/°F	140.0	140.0	140	140
dEt	Defrost timeout. Determines the maximum duration of the defrost	1...250	min	20	20	25	25
dS1	Evaporator 1 defrost end temperature (measured by probe Pb2)	-67.0...302	°C/°F	8.0	8.0	8.0	8.0
dit	Time interval between one defrost and the next	0...250	hours	6	6	6	6
FSt	Fan disabling temperature; a value, read by the evaporator probe.	-67.0...320	°C/°F	2.0	2.0	2.0	2.0
Fdt	Fan activation delay time after a defrost.	0...250	min	0	0	0	0
dt	Dripping time.	0...250	min	5	5	5	5
dFd	Used to select or deselect the exclusion of the evaporator fans during defrosting. **n**(0) = no; **y** (1) = yes (fan excluded or off).	n/y	flag	y	y	y	y
HAL	Maximum temperature alarm. Temperature value (in a relative value) which, when exceeded, will lead to the activation of alarm signaling.	**LAL**...302	°C/°F	150.0	150.0	150.0	150.0
LAL	Minimum temperature alarm. Temperature value (in a relative value) which, when not reached, will lead to the activation of alarm signaling.	-67.0...**HAL**	°C/°F	-50.0	-50.0	-50.0	-50.0
rFt	Low refrigerant alarm signaling delay.	0...250	min	0 (not in applications)			
CA1	Positive or negative temperature value to be added to the value of Pb1.	-30.0...30.0	°C/°F	0.0	0.0	0.0	0.0
CA2	Positive or negative temperature value to be added to the value of Pb2.	-30.0...30.0	°C/°F	0.0	0.0	0.0	0.0
PS1	When enabled (**PS1**≠0) this is the access key for the user parameters.	0...250	num	0	0	0	0
H42	Evaporator probe presence. **n**(0) = not present; **y**(1) = present.	n/y	flag	y	y	y	y
tAb	Reserved: read-only parameter.	/	/	/	/	/	/
rAP	Reset pressure switch alarms	/	/	/	/	/	/

Note: the “User” menu parameters also include **PA2**, which allows access to the "Installer" menu.
Note: for the full list of parameters, see the section "**Installer parameters**".

Installer parameters IDNext 974 P/C

Parameter	Description	Range	UM	Default	AP1	AP2	AP3
SEt	Regulation setpoint with range between the minimum setpoint **LSE** and the maximum setpoint **HSE**. The setpoint value is set in the "Machine status" menu.	**LSE**...**HSE**	°C/°F	3.0	3.0	0.0	-18.0
CP (Compressor)							
diF	Compressor relay activation differential; the compressor stops when reaching the entered setpoint (upon indication of the regulation probe) and restarts at a temperature value equal to the setpoint plus the value of the differential. **Note**: always a value other than 0.	0.1...30.0	°C/°F	2.0	2.0	2.0	2.0
LSE	Minimum setpoint value	-67.0...**HSE**	°C/°F	-55.0	-55.0	-55.0	-55.0
HSE	Maximum setpoint value	**LSE**...302	°C/°F	140.0	140.0	140	140
HC	The regulator will execute operation for cooling (set "**C**(0)") or heating (set "**H**(1)")	C/H	flag	C	C	C	C
ont	Regulator switch-on time for faulty probe: • if **Ont** = 1 and **OFt** = 0 compressor always on • if **Ont** = 1 and **OFt** > 0 compressor in duty cycle	0...250	min	15	15	15	15
oFt	Regulator switch-off time for faulty probe: • if **OFt** = 1 and **Ont** = 0 compressor always off • if **OFt** = 1 and **Ont** > 0 compressor in duty cycle	0...250	min	15	15	15	15
don	Compressor relay activation delay time from call	0...250	s	0	0	0	0
doF	Delay time after switch-off; the indicated time must elapse between compressor relay switch-off and a subsequent switch-on.	0...250	min	0	0	0	0
dbi	Delay time between switch-ons; the indicated time must elapse between two consecutive compressor switch-ons.	0...250	min	0	0	0	0
Cit	Minimum compressor activation time before it can be deactivated. If **Cit** = 0 it is not active.	0...250	min	0	0	0	0
CAt	Maximum compressor activation time before it can be deactivated. If **CAt** = 0 it is not active.	0...250	min	0	0	0	0
odo	Output activation delay time from switching on the controller or after a power failure. **0** = not active	0...250	min	0	0	0	0
dCS	"Deep cooling cycle" setpoint	-67.0...302	°C/°F	0.0	0.0	0.0	0.0
tdC	"Deep cooling cycle" duration	0...250	min	0	0	0	0
dcc	Defrost activation delay after a "Deep cooling cycle"	0...250	min	0	0	0	0
CP2	Compressor 2 activation delay	0...250	min	0	0	0	0
dFA	Condenser fan and compressor activation delay from the request	0...250	s	0	0	0	0
dEF (Defrost)							
dty	Type of defrost. **0** = electrical defrost or due to stoppage - compressor OFF during defrost; **1** = cycle inversion (hot gas) defrost; compressor on during defrost; **2** = defrost with "Free" mode; defrost independent of the compressor.	0/1/2	num	0	0	0	0

Parameter	Description	Range	UM	Default	AP1	AP2	AP3
dOH	Defrost cycle activation delay from the call	0...250	min	0	0	0	0
dEt	Defrost timeout. Determines the maximum duration of the defrost	1...250	min	20	20	25	25
dS1	Evaporator 1 defrost end temperature (measured by probe Pb2)	-67.0...302	°C/°F	8.0	8.0	8.0	8.0
dS2	Evaporator 2 defrost end temperature (measured by Pb3 if **H43** = 2EP)	-67.0...302	°C/°F	0.0	0.0	0.0	0.0
dPo	Defrost activation request at startup, if the temperature measured by Pb2 allows. **n**(0) = no; **y**(1) = yes	n/y	flag	n	n	n	n
tCd	Minimum period of time with the compressor ON or OFF before defrost is activated.	0...250	min	0	0	0	0
Cod	Time with the compressor OFF before defrost is activated	0...250	min	0	0	0	0
dMr	Enables the defrost count reset in the case of manual defrosting. **n** = count reset does not take place; **y** = count reset takes place	n/y	flag	n	n	n	n
d00	Compressor running time before defrost is activated	0...250	hours	0	0	0	0
d01	Sets the unit of measure in **d00**: **0** = hours; **1** = minutes; **2** = seconds.	0/1/2	num	0	0	0	0
dit	Time interval between one defrost and the next	0...250	hours	6	6	6	6
d11	Sets the unit of measure in **dit**. **0** = hours; **1** = minutes; **2** = seconds.	0/1/2	num	0	0	0	0
d20	Can be used to activate the defrost when the compressor is off. • **0** = disabled. Defrost is not activated. • **1** = enabled. Defrost is activated when the compressor is off.	0/1	flag	0	0	0	0
d40	Enables/disables use of probe Pb2. • **0** = disabled. Defrost does not take Pb2 into account. • **1** = enabled. Defrost runs according to the value read by Pb2 (refers only to the defrost with threshold)	0/1	flag	0	0	0	0
d41	Sets the defrost activation threshold	-67.0...302	°C/°F	0	0	0	0
d42	Sets the maximum time for which the evaporator can remain under the threshold **d41**	0...250	min	0	0	0	0
d43	Sets the type of time count in which the evaporator temperature remains under the threshold value. • **0** = count independent of the compressor status • **1** = count with compressor on (when the compressor is off the count begins again) • **2** = count independent of the compressor status. The count stops when the temperature rises above the threshold **d41** • **3** = count with compressor on and until the temperature rises above the threshold **d41**	0...3	num	0	0	0	0
d44	Sets the threshold management mode. • **0** = absolute value (for example: **d41** = -25°C means that the threshold temperature is exactly -25°C) • **1** = relative value (negative offset, relative to the value measured by the defrost probe Pb2 (if **d40** = 1) at the end of the first cooling cycle or on startup)	0/1	flag	0	0	0	0

Parameter	Description	Range	UM	Default	AP1	AP2	AP3
d90	Sets the defrost mode with RTC. • **0** = RTC disabled • **1** = Reserved • **2** = RTC at fixed intervals (**d91**) • **3** = Regular RTC	0...3	num	0	0	0	0
d91	Sets the number of daily defrosts (only if **d90** = 2)	0...255	num	0	0	0	0
d92	Sets the first weekend/holiday day. • **0** = Sunday • **1** = Monday • **2** = Tuesday • **3** = Wednesday • **4** = Thursday • **5** = Friday • **6** = Saturday • **7** = Disabled	0...7	num	0	0	0	0
d93	Sets the second weekend/holiday day. Same as **d92**.	0...7	num	0	0	0	0
d94	Sets the duration of the regular defrost in days	1...7	num	0	0	0	0
d1h	First weekday defrost start hour	0...23	hours	0	0	0	0
d1n	First weekday defrost start minute	0...59	min	0	0	0	0
F1h	First weekend/holiday defrost start hour	0...23	hours	0	0	0	0
F1n	First weekend/holiday defrost start minute	0...59	min	0	0	0	0
Fan							
FPt	Sets whether parameter **FSt** is expressed as an absolute temperature value or as a value relative to the Setpoint. **0** = absolute; **1** = relative.	0/1	flag	0.0	0.0	0.0	0.0
FSt	Fan disabling temperature; a value, read by the evaporator probe.	-67.0...320	°C/°F	2.0	2.0	2.0	2.0
FAd	Evaporator fan activation differential (parameter **FSt**).	1.0...25.0	°C/°F	2.0	2.0	2.0	2.0
Fdt	Fan activation delay time after a defrost.	0...250	min	0	0	0	0
dt	Dripping time.	0...250	min	5	5	5	5
dFd	Used to select or deselect the exclusion of the evaporator fans during defrosting. **n**(0) = no; **y** (1) = yes (fan excluded or off).	n/y	flag	y	y	y	y

<table>
<tr><th>Parameter</th><th>Description</th><th>Range</th><th>UM</th><th>Default</th><th>AP1</th><th>AP2</th><th>AP3</th></tr>
<tr><td>FCo</td><td>Evaporator fan operating mode.
<table>
<tr><th rowspan="2">Pb2</th><th rowspan="2">H42</th><th rowspan="2">FCo</th><th colspan="2">day</th><th colspan="2">night</th></tr>
<tr><th>Cn</th><th>Cf</th><th>Cn</th><th>Cf</th></tr>
<tr><td rowspan="4">ok</td><td rowspan="4">y</td><td>0</td><td>T</td><td>Off</td><td>T</td><td>Off</td></tr>
<tr><td>1</td><td>T</td><td>T</td><td>T</td><td>T</td></tr>
<tr><td>2</td><td>T</td><td>DCd</td><td>T</td><td>DCn</td></tr>
<tr><td>3</td><td>T</td><td>DCd</td><td>T</td><td>DCn</td></tr>
<tr><td rowspan="4">ko</td><td rowspan="4">y</td><td>0</td><td>On</td><td>Off</td><td>On</td><td>Off</td></tr>
<tr><td>1</td><td>On</td><td>On</td><td>On</td><td>On</td></tr>
<tr><td>2</td><td>On</td><td>DCd</td><td>On</td><td>DCn</td></tr>
<tr><td>3</td><td>On</td><td>DCd</td><td>On</td><td>DCn</td></tr>
<tr><td rowspan="4">no</td><td rowspan="4">n</td><td>0</td><td>On</td><td>Off</td><td>On</td><td>Off</td></tr>
<tr><td>1</td><td>On</td><td>On</td><td>On</td><td>On</td></tr>
<tr><td>2</td><td>On</td><td>DCd</td><td>On</td><td>DCn</td></tr>
<tr><td>3</td><td>On</td><td>DCd</td><td>On</td><td>DCn</td></tr>
</table>
Headings legend:
Pb2 = probe Pb2 status (ok = present; ko = in E2 error and no = absent; day = day mode; night = night mode; Cn = compressor on; Cf = compressor off.
Status legend:
T = thermostat controlled fans; On = fans on; Off= fans off; DCd = Day duty cycle or DCn = Night duty cycle.</td><td>0...3</td><td>num</td><td>1</td><td>1</td><td>1</td><td>1</td></tr>
<tr><td>Fon</td><td>Day duty cycle: time with fans on.</td><td>0...250</td><td>min</td><td>0</td><td>0</td><td>0</td><td>0</td></tr>
<tr><td>FoF</td><td>Day duty cycle: time with fans off.</td><td>0...250</td><td>min</td><td>0</td><td>0</td><td>0</td><td>0</td></tr>
<tr><td>Fnn</td><td>Night duty cycle: time with fans on.</td><td>0...250</td><td>min</td><td>0</td><td>0</td><td>0</td><td>0</td></tr>
<tr><td>FnF</td><td>Night duty cycle: time with fans off.</td><td>0...250</td><td>min</td><td>0</td><td>0</td><td>0</td><td>0</td></tr>
<tr><td>ESF</td><td>"Night" mode activation. n(0) = no; y(1) = yes.</td><td>n/y</td><td>flag</td><td>n</td><td>n</td><td>n</td><td>n</td></tr>
<tr><td colspan="8">AL (Alarms)</td></tr>
<tr><td>Att</td><td>Sets the absolute or relative value for parameters HAL and LAL.
0 = absolute value
1 = relative value</td><td>0/1</td><td>flag</td><td>0</td><td>0</td><td>0</td><td>0</td></tr>
<tr><td>AFd</td><td>Alarm differential.</td><td>0.1...25.0</td><td>°C/°F</td><td>2.0</td><td>2.0</td><td>2.0</td><td>2.0</td></tr>
<tr><td>HAL</td><td>Maximum temperature alarm.
Temperature value (in a relative value) which, when exceeded, will lead to the activation of alarm signaling.</td><td>LAL...302</td><td>°C/°F</td><td>150.0</td><td>150.0</td><td>150.0</td><td>150.0</td></tr>
<tr><td>LAL</td><td>Minimum temperature alarm.
Temperature value (in a relative value) which, when not reached, will lead to the activation of alarm signaling.</td><td>-67.0...HAL</td><td>°C/°F</td><td>-50.0</td><td>-50.0</td><td>-50.0</td><td>-50.0</td></tr>
<tr><td>PAo</td><td>Alarm exclusion time when switching on the controller, after a power failure.</td><td>0...10</td><td>hours</td><td>0</td><td>0</td><td>0</td><td>0</td></tr>
<tr><td>dAo</td><td>Temperature alarm exclusion time after defrosting.</td><td>0...250</td><td>min</td><td>0</td><td>0</td><td>0</td><td>0</td></tr>
<tr><td>oAo</td><td>Alarm signaling delay after deactivation of the digital input (door closure). Alarm refers to high and low temperature alarms.</td><td>0...10</td><td>hours</td><td>0</td><td>0</td><td>0</td><td>0</td></tr>
<tr><td>tdO</td><td>Door open alarm activation delay time.</td><td>0...250</td><td>min</td><td>0</td><td>0</td><td>0</td><td>0</td></tr>
<tr><td>tAo</td><td>Temperature alarm signaling delay time.</td><td>0...250</td><td>min</td><td>0</td><td>0</td><td>0</td><td>0</td></tr>
<tr><td>dAt</td><td>Defrost ended due to timeout alarm indication.
n(0) = does not activate alarm; y(1) = activates alarm.</td><td>n/y</td><td>flag</td><td>0</td><td>0</td><td>0</td><td>0</td></tr>
</table>

Parameter	Description	Range	UM	Default	AP1	AP2	AP3
EAL	An external alarm inhibits the regulators. **0** = regulators not inhibited; **1** = compressor and defrost inhibited; **2** = fans, compressor and defrost inhibited;	0/1/2	flag	n	n	n	n
AoP	Alarm output polarity. **0** = NO; **1** = NC.	0/1	flag	1	1	1	1
SA3	Probe 3 alarm setpoint.	-67.0...302	°C/°F	0.0	0.0	0.0	0.0
dA3	Probe 3 alarm differential.	0.1...30.0	°C/°F	1.0	1.0	1.0	1.0
rFt	Low refrigerant alarm signaling delay.	0...250	min	0 (not in applications)			
Lit (Lights and digital inputs)							
dOd	Digital input shuts off utilities: **0** = disabled; **1** = fans disabled; **2** = compressor disabled; **3** = fans and compressor disabled.	0...3	num	0	0	0	0
dAd	Digital input activation delay	0...250	min	0	0	0	0
dCO	Compressor activation delay from acknowledgment	0...250	min	0	0	0	0
AUP	Auxiliary (AUX) output activation when the door is opened.	n/y	flag	n	n	n	n
PrE (Pressure switch)							
Pen	Number of errors permitted per minimum/maximum pressure switch input	0...15	num	0	0	0	0
PEi	Minimum/maximum pressure switch error count interval	1...99	min	1	1	1	1
PEt	Compressor activation delay after pressure switch deactivation	0...255	min	0	0	0	0
EnS (Energy Saving)							
oSP	Temperature value to be added to the setpoint in the case of an enabled reduced set (Economy function)	-30.0...30.0	°C/°F	0.0	0.0	0.0	0.0
OdF	Differential offset during an energy saving cycle or reduced set	0.1...30.0	°C/°F	2.0	2.0	2.0	2.0
Add (Communication)							
Adr	Modbus protocol controller address.	1...247	flag	1 (not in applications)			
bAU	Modbus Baudrate selection. **96** (0) = 9600; **192** (1) = 19200; **384** (2) = 38400	96/192/384	num	96 (not in applications)			
Pty	Modbus parity bit. **n**(0) = none; **E**(1) = even; **o**(2) = odd.	n/E/o	num	E (not in applications)			
diS (Display)							
dro	Selects the unit of measure used when displaying the temperature read by the probes. (**0** = °C, **1** = °F). **Note**: changing from °C to °F or vice-versa does NOT change the **SEt**, **diF** values, etc. (example: **SEt** = 10°C becomes 10°F).	0/1	flag	0	0	0	0
CA1	Positive or negative temperature value to be added to the value of Pb1.	-30.0...30.0	°C/°F	0.0	0.0	0.0	0.0
CA2	Positive or negative temperature value to be added to the value of Pb2.	-30.0...30.0	°C/°F	0.0	0.0	0.0	0.0
CA3	Positive or negative temperature value to be added to the value of Pb3.	-30.0...30.0	°C/°F	0.0	0.0	0.0	0.0
CAi	Activation of the calibration value. **0** = Adds the value to the temperature value displayed; **1** = Adds the value to the temperature used by the regulators and not to the one displayed; **2** = Adds the value to the temperature used by the regulators and to the temperature displayed.	0/1/2	num	2	2	2	2

Parameter	Description	Range	UM	Default	AP1	AP2	AP3
LoC	Keypad lock. **n**(0) = Keypad lock disabled **y**(1) = Keypad lock enabled (On startup or when 30 seconds have passed since the last action carried out on the user interface).	n/y	flag	y	y	y	y
ddd	Selects the type of value to show on the display. **0** = setpoint; **1** = probe Pb1 ; **2** = probe Pb2 ; **3** = probe Pb3.	0...3	num	1	1	1	1
ddL	Display mode during defrosting. **0** = displays the temperature read by Pb1; **1** = inhibits reading on the value of Pb1 at the start of defrost and until the setpoint is reached; **2** = displays the label **dEF** during the defrost until the setpoint is reached.	0/1/2	num	0	0	0	0
Ldd	Display unlock timeout value - label **dEF**	0...250	min	30	30	30	30
ndt	Display with decimal point. **n**(0) = no; **y**(1) = yes.	n/y	flag	y	y	y	y
FSE	Sets the value (COEFF) used by the low-pass filter to calculate the temperature value to be displayed. **0** = deactivated; **1** = 200; **2** = 100; **3** = 50; **4** = 25; **5** = 12; **6** = 6; **7** = 3.	0...7	num	0	0	0	0
FdS	Filter disabling threshold.	-67.0...302	°C/°F	0	0	0	0
Ftt	Time that has passed beyond the value of **FdS** before the filter is disabled.	0...250	min	0	0	0	0
FHt	Filter sampling interval.	1...250	s	1	1	1	1
PS1	When enabled (**PS1**≠0) this is the access key for the user parameters.	0...250	num	0	0	0	0
PS2	When enabled (**PS2**≠0) this is the access key for the installer parameters.	0...250	num	15	15	15	15
CnF (Configuration)							
H00	Selects the probe type. **0** = PTC; **1** = NTC; **2** = Pt1000.	0/1/2	flag	1	1	1	1
H08	Stand-by operating mode. **0** = display off; the regulators are active and the device signals any alarms by reactivating the display; **1** = display off; the regulators and alarms are inhibited; **2** = the display shows the label “OFF”; the regulators and alarms are inhibited.	0/1/2	num	2	2	2	2
H11	Digital input 1/polarity configuration: **0** = disabled; **±1** = defrost; **±2** = reduced set; **±3** = auxiliary; **±4** = door switch; **±5** = external alarm; **±6** = stand-by; **±7** = pressure switch; **±8** = deep cooling (DCC); **±9** = light; **±10** = energy saving. **Note**: • the “+” sign indicates that the input is active if the contact is closed. • the “-” sign indicates that the input is active if the contact is open.	-10...+10	num	0	0	0	0
H21	Configuration of digital output 1 (**Out1**): **0** = disabled; **1** = compressor; **2** = defrost; **3** = evaporator fan; **4** = alarm; **5** = auxiliary; **6** = stand-by; **7** = light; **8** = buzzer; **9** = compressor 2; **10** = evaporator 2 defrost; **11** = condenser fans; **12** = heater deadband control; **13** = variable speed compressor (VSC).	0...13	num	1	1	1	1

Parameter	Description	Range	UM	Default	AP1	AP2	AP3
H22	Configuration of digital output 2 (**Out2**). Same as **H21**. **0** = disabled; **1** = compressor; **2** = defrost; **3** = evaporator fan; **4** = alarm; **5** = auxiliary; **6** = stand-by; **7** = light; **8** = buzzer; **9** = compressor 2; **10** = evaporator 2 defrost; **11** = condenser fans; **12** = heater deadband control.	0...12	num	2	2	2	2
H23	Configuration of digital output 3 (**Out3**). Same as **H22**.	0...12	num	3	3	3	3
H31	⏃ key configuration. **0** = disabled; **1** = defrost; **2** = auxiliary; **3** = reduced set; **4** = stand-by; **5** = not used **6** = not used; **7** = deep cooling (DCC); **8** = light.	0...8	num	1	1	1	1
H32	⏃ key configuration. Same as **H31**.	0...8	num	0	0	0	0
H33	⏻ key configuration. Same as **H31**.	0...8	num	4	4	4	4
H34	💡 key configuration. Same as **H31**.	0...8	num	0	0	0	0
H35	☆ key configuration. Same as **H31**.	0...8	num	0	0	0	0
H42	Evaporator probe presence. **n**(0) = not present; **y**(1) = present.	n/y	flag	y	y	y	y
H43	Probe Pb3 present. **n**(0) = not present; **y**(1) = present; **2EP**(2) = second evaporator.	n/y/2EP	flag	n	n	n	n
H45	Defrost input mode for applications with dual evaporator. **0** = first evaporator only; **1** = if at least one of the evaporators is below its defrost end temperature; **2** = only if both evaporators are under the respective defrost end temperature; **3** = evaporator 1 and evaporator 2 alternately.	0...3	num	1	1	1	1
H48	RTC (Real Time Clock) present. **0** = no RTC; **1** = RTC present.	0/1	flag	1	1	1	1
H60	Display selected application. **0** = disabled; **1** = AP1; **2** = AP2; **3** = AP3.	0...3	num	1 (not in applications)			
tAb	Reserved: read-only parameter.	/	/	/	/	/	/
FPr (UNICARD)							
UL	Transfer of the programming parameters from the device to the UNICARD	/	/	/ (not in applications)			
Fr	UNICARD formatting. Deletes all data on the UNICARD. **Note**: the use of parameter **Fr** results in the loss of all data entered. This operation cannot be reversed.	/	/	/ (not in applications)			
FnC (Functions)							
rAP	Reset pressure switch alarms	/	/	/	/	/	/
nAd (night and day)							
E10	Selects Event 1 activation mode. **0** = disabled; **1** = Monday; **2** = Tuesday; **3** = Wednesday; **4** = Thursday; **5** = Friday; **6** = Saturday; **7** = Sunday; **8** = Monday to Friday; **9** = Monday to Saturday; **10** = Saturday and Sunday; **11** = every day.	0...11	num	0 (not in applications)			
E11	Event 1 start hour.	0...23	hours	0 (not in applications)			
E12	Event 1 start minute.	0...59	min	0 (not in applications)			
E13	Event 1 end hour.	0...23	hours	0 (not in applications)			
E14	Event 1 end minute.	0...59	min	0 (not in applications)			
E15	Sets Event 1 type. **0** = Energy Saving; **1** = AUX deactivated; **2** = AUX activated; **3** = Stand-by; **4** = Light on; **5** = Light off.	0...5	num	0 (not in applications)			
E20	Selects Event 2 activation mode. Same as **E10**.	0...11	num	0 (not in applications)			

Parameter	Description	Range	UM	Default	AP1	AP2	AP3
E21	Event 2 start hour.	0...23	hours	0 (not in applications)			
E22	Event 2 start minute.	0...59	min	0 (not in applications)			
E23	Event 2 end hour.	0...23	hours	0 (not in applications)			
E24	Event 2 end minute.	0...59	min	0 (not in applications)			
E25	Sets Event 2 type. Same as **E15**.	0...5	num	0 (not in applications)			

Note: if one or more parameters in folder **CnF** or marked with **(!)** are changed, the controller must be switched off and then on again to make sure it works properly.

Parameters IDNext 974 P/CI

User parameters IDNext 974 P/CI

Parameter	Description	Range	UM	Default	AP1	AP2	AP3
SEt	Regulation setpoint with range between the minimum setpoint **LSE** and the maximum setpoint **HSE**. The setpoint value is set in the "Machine status" menu.	**LSE**...**HSE**	°C/°F	3.0	3.0	0.0	-18.0
diF	Compressor relay activation differential; the compressor stops when reaching the entered setpoint (upon indication of the regulation probe) and restarts at a temperature value equal to the setpoint plus the value of the differential. **Note**: always a value other than 0.	0.1...30.0	°C/°F	2.0	2.0	2.0	2.0
LSE	Minimum setpoint value	-67.0...**HSE**	°C/°F	-55.0	-55.0	-55.0	-55.0
HSE	Maximum setpoint value	**LSE**...302	°C/°F	140.0	140.0	140	140
dEt	Defrost timeout. Determines the maximum duration of the defrost	1...250	min	20	20	25	25
dS1	Evaporator 1 defrost end temperature (measured by probe Pb2)	-67.0...302	°C/°F	8.0	8.0	8.0	8.0
dit	Time interval between one defrost and the next	0...250	hours	6	6	6	6
FSt	Fan disabling temperature; a value, read by the evaporator probe.	-67.0...320	°C/°F	2.0	2.0	2.0	2.0
Fdt	Fan activation delay time after a defrost.	0...250	min	0	0	0	0
dt	Dripping time.	0...250	min	5	5	5	5
dFd	Used to select or deselect the exclusion of the evaporator fans during defrosting. **n**(0) = no; **y** (1) = yes (fan excluded or off).	n/y	flag	y	y	y	y
HAL	Maximum temperature alarm. Temperature value (in a relative value) which, when exceeded, will lead to the activation of alarm signaling.	**LAL**...302	°C/°F	150.0	150.0	150.0	150.0
LAL	Minimum temperature alarm. Temperature value (in a relative value) which, when not reached, will lead to the activation of alarm signaling.	-67.0...**HAL**	°C/°F	-50.0	-50.0	-50.0	-50.0
rFt	Low refrigerant alarm signaling delay.	0...250	min	0 (not in applications)			
CA1	Positive or negative temperature value to be added to the value of Pb1.	-30.0...30.0	°C/°F	0.0	0.0	0.0	0.0
CA2	Positive or negative temperature value to be added to the value of Pb2.	-30.0...30.0	°C/°F	0.0	0.0	0.0	0.0
PS1	When enabled (**PS1**≠0) this is the access key for the user parameters.	0...250	num	0	0	0	0
H42	Evaporator probe presence. **n**(0) = not present; **y**(1) = present.	n/y	flag	y	y	y	y
tAb	Reserved: read-only parameter.	/	/	/	/	/	/
rAP	Reset pressure switch alarms	/	/	/	/	/	/

Note: the “User” menu parameters also include **PA2**, which allows access to the "Installer" menu.
Note: for the full list of parameters, see the section "**Installer parameters**".

Installer parameters IDNext 974 P/CI

Parameter	Description	Range	UM	Default	AP1	AP2	AP3
SEt	Regulation setpoint with range between the minimum setpoint **LSE** and the maximum setpoint **HSE**. The setpoint value is set in the "Machine status" menu.	**LSE**...**HSE**	°C/°F	3.0	3.0	0.0	-18.0
CP (Compressor)							
diF	Compressor relay activation differential; the compressor stops when reaching the entered setpoint (upon indication of the regulation probe) and restarts at a temperature value equal to the setpoint plus the value of the differential. **Note**: always a value other than 0.	0.1...30.0	°C/°F	2.0	2.0	2.0	2.0
LSE	Minimum setpoint value	-67.0...**HSE**	°C/°F	-55.0	-55.0	-55.0	-55.0
HSE	Maximum setpoint value	**LSE**...302	°C/°F	140.0	140.0	140	140
HC	The regulator will execute operation for cooling (set "**C**(0)") or heating (set "**H**(1)")	C/H	flag	C	C	C	C
ont	Regulator switch-on time for faulty probe: • if **Ont** = 1 and **OFt** = 0 compressor always on • if **Ont** = 1 and **OFt** > 0 compressor in duty cycle	0...250	min	15	15	15	15
oFt	Regulator switch-off time for faulty probe: • if **OFt** = 1 and **Ont** = 0 compressor always off • if **OFt** = 1 and **Ont** > 0 compressor in duty cycle	0...250	min	15	15	15	15
don	Compressor relay activation delay time from call	0...250	s	0	0	0	0
doF	Delay time after switch-off; the indicated time must elapse between compressor relay switch-off and a subsequent switch-on.	0...250	min	0	0	0	0
dbi	Delay time between switch-ons; the indicated time must elapse between two consecutive compressor switch-ons.	0...250	min	0	0	0	0
Cit	Minimum compressor activation time before it can be deactivated. If **Cit** = 0 it is not active.	0...250	min	0	0	0	0
CAt	Maximum compressor activation time before it can be deactivated. If **CAt** = 0 it is not active.	0...250	min	0	0	0	0
odo	Output activation delay time from switching on the controller or after a power failure. **0** = not active	0...250	min	0	0	0	0
dCS	"Deep cooling cycle" setpoint	-67.0...302	°C/°F	0.0	0.0	0.0	0.0
tdC	"Deep cooling cycle" duration	0...250	min	0	0	0	0
dcc	Defrost activation delay after a "Deep cooling cycle"	0...250	min	0	0	0	0
CP2	Compressor 2 activation delay	0...250	min	0	0	0	0
dFA	Condenser fan and compressor activation delay from the request	0...250	s	0	0	0	0
dEF (Defrost)							
dty	Type of defrost. **0** = electrical defrost or due to stoppage - compressor OFF during defrost; **1** = cycle inversion (hot gas) defrost; compressor on during defrost; **2** = defrost with "Free" mode; defrost independent of the compressor.	0/1/2	num	0	0	0	0

Parameter	Description	Range	UM	Default	AP1	AP2	AP3
dOH	Defrost cycle activation delay from the call	0...250	min	0	0	0	0
dEt	Defrost timeout. Determines the maximum duration of the defrost	1...250	min	20	20	25	25
dS1	Evaporator 1 defrost end temperature (measured by probe Pb2)	-67.0...302	°C/°F	8.0	8.0	8.0	8.0
dS2	Evaporator 2 defrost end temperature (measured by Pb3 if **H43** = 2EP)	-67.0...302	°C/°F	0.0	0.0	0.0	0.0
dPo	Defrost activation request at startup, if the temperature measured by Pb2 allows. **n**(0) = no; **y**(1) = yes	n/y	flag	n	n	n	n
tCd	Minimum period of time with the compressor ON or OFF before defrost is activated.	0...250	min	0	0	0	0
Cod	Time with the compressor OFF before defrost is activated	0...250	min	0	0	0	0
dMr	Enables the defrost count reset in the case of manual defrosting. **n** = count reset does not take place; **y** = count reset takes place	n/y	flag	n	n	n	n
d00	Compressor running time before defrost is activated	0...250	hours	0	0	0	0
d01	Sets the unit of measure in **d00**: **0** = hours; **1** = minutes; **2** = seconds.	0/1/2	num	0	0	0	0
dit	Time interval between one defrost and the next	0...250	hours	6	6	6	6
d11	Sets the unit of measure in **dit**. **0** = hours; **1** = minutes; **2** = seconds.	0/1/2	num	0	0	0	0
d20	Can be used to activate the defrost when the compressor is off. • **0** = disabled. Defrost is not activated. • **1** = enabled. Defrost is activated when the compressor is off.	0/1	flag	0	0	0	0
d40	Enables/disables use of probe Pb2. • **0** = disabled. Defrost does not take Pb2 into account. • **1** = enabled. Defrost runs according to the value read by Pb2 (refers only to the defrost with threshold)	0/1	flag	0	0	0	0
d41	Sets the defrost activation threshold	-67.0...302	°C/°F	0	0	0	0
d42	Sets the maximum time for which the evaporator can remain under the threshold **d41**	0...250	min	0	0	0	0
d43	Sets the type of time count in which the evaporator temperature remains under the threshold value. • **0** = count independent of the compressor status • **1** = count with compressor on (when the compressor is off the count begins again) • **2** = count independent of the compressor status. The count stops when the temperature rises above the threshold **d41** • **3** = count with compressor on and until the temperature rises above the threshold **d41**	0...3	num	0	0	0	0
d44	Sets the threshold management mode. • **0** = absolute value (for example: **d41** = -25°C means that the threshold temperature is exactly -25°C) • **1** = relative value (negative offset, relative to the value measured by the defrost probe Pb2 (if **d40** = 1) at the end of the first cooling cycle or on startup)	0/1	flag	0	0	0	0

Parameter	Description	Range	UM	Default	AP1	AP2	AP3
d90	Sets the defrost mode with RTC. • **0** = RTC disabled • **1** = Reserved • **2** = RTC at fixed intervals (**d91**) • **3** = Regular RTC	0...3	num	0	0	0	0
d91	Sets the number of daily defrosts (only if **d90** = 2)	0...255	num	0	0	0	0
d92	Sets the first weekend/holiday day. • **0** = Sunday • **1** = Monday • **2** = Tuesday • **3** = Wednesday • **4** = Thursday • **5** = Friday • **6** = Saturday • **7** = Disabled	0...7	num	0	0	0	0
d93	Sets the second weekend/holiday day. Same as **d92**.	0...7	num	0	0	0	0
d94	Sets the duration of the regular defrost in days	1...7	num	0	0	0	0
d1h	First weekday defrost start hour	0...23	hours	0	0	0	0
d1n	First weekday defrost start minute	0...59	min	0	0	0	0
F1h	First weekend/holiday defrost start hour	0...23	hours	0	0	0	0
F1n	First weekend/holiday defrost start minute	0...59	min	0	0	0	0
Fan							
FPt	Sets whether parameter **FSt** is expressed as an absolute temperature value or as a value relative to the Setpoint. **0** = absolute; **1** = relative.	0/1	flag	0.0	0.0	0.0	0.0
FSt	Fan disabling temperature; a value, read by the evaporator probe.	-67.0...320	°C/°F	2.0	2.0	2.0	2.0
FAd	Evaporator fan activation differential (parameter **FSt**).	1.0...25.0	°C/°F	2.0	2.0	2.0	2.0
Fdt	Fan activation delay time after a defrost.	0...250	min	0	0	0	0
dt	Dripping time.	0...250	min	5	5	5	5
dFd	Used to select or deselect the exclusion of the evaporator fans during defrosting. **n**(0) = no; **y** (1) = yes (fan excluded or off).	n/y	flag	y	y	y	y

<table>
<tr><th>Parameter</th><th>Description</th><th>Range</th><th>UM</th><th>Default</th><th>AP1</th><th>AP2</th><th>AP3</th></tr>
<tr><td>FCo</td><td>Evaporator fan operating mode.
<table>
<tr><th rowspan="2">Pb2</th><th rowspan="2">H42</th><th rowspan="2">FCo</th><th colspan="2">day</th><th colspan="2">night</th></tr>
<tr><th>Cn</th><th>Cf</th><th>Cn</th><th>Cf</th></tr>
<tr><td rowspan="4">ok</td><td rowspan="4">y</td><td>0</td><td>T</td><td>Off</td><td>T</td><td>Off</td></tr>
<tr><td>1</td><td>T</td><td>T</td><td>T</td><td>T</td></tr>
<tr><td>2</td><td>T</td><td>DCd</td><td>T</td><td>DCn</td></tr>
<tr><td>3</td><td>T</td><td>DCd</td><td>T</td><td>DCn</td></tr>
<tr><td rowspan="4">ko</td><td rowspan="4">y</td><td>0</td><td>On</td><td>Off</td><td>On</td><td>Off</td></tr>
<tr><td>1</td><td>On</td><td>On</td><td>On</td><td>On</td></tr>
<tr><td>2</td><td>On</td><td>DCd</td><td>On</td><td>DCn</td></tr>
<tr><td>3</td><td>On</td><td>DCd</td><td>On</td><td>DCn</td></tr>
<tr><td rowspan="4">no</td><td rowspan="4">n</td><td>0</td><td>On</td><td>Off</td><td>On</td><td>Off</td></tr>
<tr><td>1</td><td>On</td><td>On</td><td>On</td><td>On</td></tr>
<tr><td>2</td><td>On</td><td>DCd</td><td>On</td><td>DCn</td></tr>
<tr><td>3</td><td>On</td><td>DCd</td><td>On</td><td>DCn</td></tr>
</table>
Headings legend:
Pb2 = probe Pb2 status (ok = present; ko = in E2 error and no = absent; day = day mode; night = night mode; Cn = compressor on; Cf = compressor off.
Status legend:
T = thermostat controlled fans; On = fans on; Off= fans off; DCd = Day duty cycle or DCn = Night duty cycle.</td><td>0...3</td><td>num</td><td>1</td><td>1</td><td>1</td><td>1</td></tr>
<tr><td>Fon</td><td>Day duty cycle: time with fans on.</td><td>0...250</td><td>min</td><td>0</td><td>0</td><td>0</td><td>0</td></tr>
<tr><td>FoF</td><td>Day duty cycle: time with fans off.</td><td>0...250</td><td>min</td><td>0</td><td>0</td><td>0</td><td>0</td></tr>
<tr><td>Fnn</td><td>Night duty cycle: time with fans on.</td><td>0...250</td><td>min</td><td>0</td><td>0</td><td>0</td><td>0</td></tr>
<tr><td>FnF</td><td>Night duty cycle: time with fans off.</td><td>0...250</td><td>min</td><td>0</td><td>0</td><td>0</td><td>0</td></tr>
<tr><td>ESF</td><td>"Night" mode activation. n(0) = no; y(1) = yes.</td><td>n/y</td><td>flag</td><td>n</td><td>n</td><td>n</td><td>n</td></tr>
<tr><td colspan="8">AL (Alarms)</td></tr>
<tr><td>Att</td><td>Sets the absolute or relative value for parameters HAL and LAL.
0 = absolute value
1 = relative value</td><td>0/1</td><td>flag</td><td>0</td><td>0</td><td>0</td><td>0</td></tr>
<tr><td>AFd</td><td>Alarm differential.</td><td>0.1...25.0</td><td>°C/°F</td><td>2.0</td><td>2.0</td><td>2.0</td><td>2.0</td></tr>
<tr><td>HAL</td><td>Maximum temperature alarm.
Temperature value (in a relative value) which, when exceeded, will lead to the activation of alarm signaling.</td><td>LAL...302</td><td>°C/°F</td><td>150.0</td><td>150.0</td><td>150.0</td><td>150.0</td></tr>
<tr><td>LAL</td><td>Minimum temperature alarm.
Temperature value (in a relative value) which, when not reached, will lead to the activation of alarm signaling.</td><td>-67.0...HAL</td><td>°C/°F</td><td>-50.0</td><td>-50.0</td><td>-50.0</td><td>-50.0</td></tr>
<tr><td>PAo</td><td>Alarm exclusion time when switching on the controller, after a power failure.</td><td>0...10</td><td>hours</td><td>0</td><td>0</td><td>0</td><td>0</td></tr>
<tr><td>dAo</td><td>Temperature alarm exclusion time after defrosting.</td><td>0...250</td><td>min</td><td>0</td><td>0</td><td>0</td><td>0</td></tr>
<tr><td>oAo</td><td>Alarm signaling delay after deactivation of the digital input (door closure). Alarm refers to high and low temperature alarms.</td><td>0...10</td><td>hours</td><td>0</td><td>0</td><td>0</td><td>0</td></tr>
<tr><td>tdO</td><td>Door open alarm activation delay time.</td><td>0...250</td><td>min</td><td>0</td><td>0</td><td>0</td><td>0</td></tr>
<tr><td>tAo</td><td>Temperature alarm signaling delay time.</td><td>0...250</td><td>min</td><td>0</td><td>0</td><td>0</td><td>0</td></tr>
<tr><td>dAt</td><td>Defrost ended due to timeout alarm indication.
n(0) = does not activate alarm; y(1) = activates alarm.</td><td>n/y</td><td>flag</td><td>0</td><td>0</td><td>0</td><td>0</td></tr>
</table>

Parameter	Description	Range	UM	Default	AP1	AP2	AP3
EAL	An external alarm inhibits the regulators. **0** = regulators not inhibited; **1** = compressor and defrost inhibited; **2** = fans, compressor and defrost inhibited;	0/1/2	flag	n	n	n	n
AoP	Alarm output polarity. **0** = NO; **1** = NC.	0/1	flag	1	1	1	1
SA3	Probe 3 alarm setpoint.	-67.0...302	°C/°F	0.0	0.0	0.0	0.0
dA3	Probe 3 alarm differential.	0.1...30.0	°C/°F	1.0	1.0	1.0	1.0
rFt	Low refrigerant alarm signaling delay.	0...250	min	0 (not in applications)			
Lit (Lights and digital inputs)							
dOd	Digital input shuts off utilities: **0** = disabled; **1** = fans disabled; **2** = compressor disabled; **3** = fans and compressor disabled.	0...3	num	0	0	0	0
dAd	Digital input activation delay	0...250	min	0	0	0	0
dCO	Compressor activation delay from acknowledgment	0...250	min	0	0	0	0
AUP	Auxiliary (AUX) output activation when the door is opened.	n/y	flag	n	n	n	n
PrE (Pressure switch)							
Pen	Number of errors permitted per minimum/maximum pressure switch input	0...15	num	0	0	0	0
PEi	Minimum/maximum pressure switch error count interval	1...99	min	1	1	1	1
PEt	Compressor activation delay after pressure switch deactivation	0...255	min	0	0	0	0
EnS (Energy Saving)							
oSP	Temperature value to be added to the setpoint in the case of an enabled reduced set (Economy function)	-30.0...30.0	°C/°F	0.0	0.0	0.0	0.0
OdF	Differential offset during an energy saving cycle or reduced set	0.1...30.0	°C/°F	2.0	2.0	2.0	2.0
Add (Communication)							
Adr	Modbus protocol controller address.	1...247	flag	1 (not in applications)			
bAU	Modbus Baudrate selection. **96** (0) = 9600; **192** (1) = 19200; **384** (2) = 38400	96/192/384	num	96 (not in applications)			
Pty	Modbus parity bit. **n**(0) = none; **E**(1) = even; **o**(2) = odd.	n/E/o	num	E (not in applications)			
diS (Display)							
dro	Selects the unit of measure used when displaying the temperature read by the probes. (**0** = °C, **1** = °F). **Note**: changing from °C to °F or vice-versa does NOT change the **SEt**, **diF** values, etc. (example: **SEt** = 10°C becomes 10°F).	0/1	flag	0	0	0	0
CA1	Positive or negative temperature value to be added to the value of Pb1.	-30.0...30.0	°C/°F	0.0	0.0	0.0	0.0
CA2	Positive or negative temperature value to be added to the value of Pb2.	-30.0...30.0	°C/°F	0.0	0.0	0.0	0.0
CA3	Positive or negative temperature value to be added to the value of Pb3.	-30.0...30.0	°C/°F	0.0	0.0	0.0	0.0
CAi	Activation of the calibration value. **0** = Adds the value to the temperature value displayed; **1** = Adds the value to the temperature used by the regulators and not to the one displayed; **2** = Adds the value to the temperature used by the regulators and to the temperature displayed.	0/1/2	num	2	2	2	2

Parameter	Description	Range	UM	Default	AP1	AP2	AP3
LoC	Keypad lock. **n**(0) = Keypad lock disabled **y**(1) = Keypad lock enabled (On startup or when 30 seconds have passed since the last action carried out on the user interface).	n/y	flag	y	y	y	y
ddd	Selects the type of value to show on the display. **0** = setpoint; **1** = probe Pb1 ; **2** = probe Pb2 ; **3** = probe Pb3.	0...3	num	1	1	1	1
ddL	Display mode during defrosting. **0** = displays the temperature read by Pb1; **1** = inhibits reading on the value of Pb1 at the start of defrost and until the setpoint is reached; **2** = displays the label **dEF** during the defrost until the setpoint is reached.	0/1/2	num	0	0	0	0
Ldd	Display unlock timeout value - label **dEF**	0...250	min	30	30	30	30
ndt	Display with decimal point. **n**(0) = no; **y**(1) = yes.	n/y	flag	y	y	y	y
FSE	Sets the value (COEFF) used by the low-pass filter to calculate the temperature value to be displayed. **0** = deactivated; **1** = 200; **2** = 100; **3** = 50; **4** = 25; **5** = 12; **6** = 6; **7** = 3.	0...7	num	0	0	0	0
FdS	Filter disabling threshold.	-67.0...302	°C/°F	0	0	0	0
Ftt	Time that has passed beyond the value of **FdS** before the filter is disabled.	0...250	min	0	0	0	0
FHt	Filter sampling interval.	1...250	s	1	1	1	1
PS1	When enabled (**PS1**≠0) this is the access key for the user parameters.	0...250	num	0	0	0	0
PS2	When enabled (**PS2**≠0) this is the access key for the installer parameters.	0...250	num	15	15	15	15
CnF (Configuration)							
H00	Selects the probe type. **0** = PTC; **1** = NTC; **2** = Pt1000.	0/1/2	flag	1	1	1	1
H08	Stand-by operating mode. **0** = display off; the regulators are active and the device signals any alarms by reactivating the display; **1** = display off; the regulators and alarms are inhibited; **2** = the display shows the label “OFF”; the regulators and alarms are inhibited.	0/1/2	num	2	2	2	2
H11	Digital input 1/polarity configuration: **0** = disabled; **±1** = defrost; **±2** = reduced set; **±3** = auxiliary; **±4** = door switch; **±5** = external alarm; **±6** = stand-by; **±7** = pressure switch; **±8** = deep cooling (DCC); **±9** = light; **±10** = energy saving. **Note**: • the “+” sign indicates that the input is active if the contact is closed. • the “-” sign indicates that the input is active if the contact is open.	-10...+10	num	0	0	0	0
H21	Configuration of digital output 1 (**Out1**): **0** = disabled; **1** = compressor; **2** = defrost; **3** = evaporator fan; **4** = alarm; **5** = auxiliary; **6** = stand-by; **7** = light; **8** = buzzer; **9** = compressor 2; **10** = evaporator 2 defrost; **11** = condenser fans; **12** = heater deadband control; **13** = variable speed compressor (VSC).	0...13	num	13	13	13	13

Parameter	Description	Range	UM	Default	AP1	AP2	AP3
H22	Configuration of digital output 2 (**Out2**). Same as **H21**. **0** = disabled; **1** = compressor; **2** = defrost; **3** = evaporator fan; **4** = alarm; **5** = auxiliary; **6** = stand-by; **7** = light; **8** = buzzer; **9** = compressor 2; **10** = evaporator 2 defrost; **11** = condenser fans; **12** = heater deadband control.	0...12	num	2	2	2	2
H24	Configuration of digital output 4 (**Out4**). Same as **H22**.	0...12	num	3	3	3	3
H31	∧ key configuration. **0** = disabled; **1** = defrost; **2** = auxiliary; **3** = reduced set; **4** = stand-by; **5** = autotuning procedure **nPL**; **6** = autotuning procedure **tun**; **7** = deep cooling (DCC); **8** = light.	0...8	num	1	1	1	1
H32	∨ key configuration. Same as **H31**.	0...8	num	0	0	0	0
H33	⏻ key configuration. Same as **H31**.	0...8	num	4	4	4	4
H34	💡 key configuration. Same as **H31**.	0...8	num	0	0	0	0
H35	☆ key configuration. Same as **H31**.	0...8	num	0	0	0	0
H42	Evaporator probe presence. **n**(0) = not present; **y**(1) = present.	n/y	flag	y	y	y	y
H43	Probe Pb3 present. **n**(0) = not present; **y**(1) = present; **2EP**(2) = second evaporator.	n/y/2EP	flag	n	n	n	n
H45	Defrost input mode for applications with dual evaporator. **0** = first evaporator only; **1** = if at least one of the evaporators is below its defrost end temperature; **2** = only if both evaporators are under the respective defrost end temperature; **3** = evaporator 1 and evaporator 2 alternately.	0...3	num	1	1	1	1
H48	RTC (Real Time Clock) present. **0** = no RTC; **1** = RTC present.	0/1	flag	1	1	1	1
H60	Display selected application. **0** = disabled; **1** = AP1; **2** = AP2; **3** = AP3.	0...3	num	1 (not in applications)			
tAb	Reserved: read-only parameter.	/	/	/	/	/	/
FPr (UNICARD)							
UL	Transfer of the programming parameters from the device to the UNICARD	/	/	/ (not in applications)			
Fr	UNICARD formatting. Deletes all data on the UNICARD. **Note**: the use of parameter **Fr** results in the loss of all data entered. This operation cannot be reversed.	/	/	/ (not in applications)			
FnC (Functions)							
rAP	Reset pressure switch alarms	/	/	/	/	/	/
nPL	Preliminary Autotuning procedure activation	/	/	/	/	/	/
tun	Autotuning activation	/	/	/	/	/	/
VSC (Variable-speed compressor)							
CEr	Controlled capacity value in the event of regulation probe error.	0.0...100	%	50.0	50.0	50.0	50.0
PdS	Differential for forced activation of a pull-down.	-50.0...50.0	K/°R	3.0	3.0	3.0	3.0
PUS	Differential for forced activation of a pull-up.	-50.0...50.0	K/°R	-3.0	-3.0	-3.0	-3.0
PUd	Temperature outside range timeout. The timer is activated when the regulation probe reaches a value greater than **SEt+PdS** (for Pull Down) or less than **SEt+PuS** (for Pull Up). When the timer runs out, a Pull Down or Pull Up procedure will be started depending on the zone in which the probe is located. If the temperature recovers before the end of this timed period, the timer is reloaded.	0...1000	min	4	4	4	4

Parameter	Description	Range	UM	Default	AP1	AP2	AP3
PdE	Pull-down end differential.	-50.0...50.0	K/°R	0.0	0.0	0.0	0.0
PUE	Pull-up end differential. If a pull-up is activated when the timer **PUd** runs out, the compressor is stopped until **SEt+PUE** is reached.	-50.0...50.0	K/°R	0.0	0.0	0.0	0.0
Pdt	Optimized pull-down timeout.	0...1000	min	10	10	10	10
Pdd	Controlled capacity value, if a pull-down is activated, when the time period **PUd** has elapsed, that will be maintained: • for a time period **Pdt** at the end of which the capacity will be forced to 100% until **SEt+PdE** is reached. • until the temperature **SEt+PdE** is reached (if the time < Pdt).	0.0...100	%	60.0	60.0	60.0	60.0
CPd	Controlled capacity after a pull-down in day operating mode.	0.0...100	%	60.0	60.0	60.0	60.0
CPn	Controlled capacity after a pull-down in night operating mode.	0.0...100	%	50.0	50.0	50.0	50.0
CPb	PID regulator proportional band.	0.1...3200	K/°R	3.0	3.0	3.0	3.0
Cti	PID integral time.	0...65535	s	60	60	60	60
Ctd	PID derivative time.	0...65535	s	0	0	0	0
CSd	Duration of constant-speed compressor heating (set by **CSC**) on startup or after a stand-by.	0...900	s	120	120	120	120
CSC	Fixed compressor capacity for a time period equal to **CSd** on startup or after a stand-by.	44.4...100	%	80.0	80.0	80.0	80.0
CAU	Selects automatic or manual PID mode. **0** = automatic; **1** = manual.	0/1	flag	0	0	0	0
CdU	PID duty cycle in manual mode. If **CAU** = **AUt**, **CdU** will function as a maximum controlled capacity limiter (%). If **CAU** = **FiH**, **CdU** will force controlled capacity of the compressor (%).	0.0...100	%	100	100	100	100
F_1	Maximum compressor operating frequency.	0.0...250	Hz	150	150	150	150
F_2	Minimum compressor operating frequency.	0.0...250	Hz	67.0	67.0	67.0	67.0
nAd (night and day)							
E10	Selects Event 1 activation mode. **0** = disabled; **1** = Monday; **2** = Tuesday; **3** = Wednesday; **4** = Thursday; **5** = Friday; **6** = Saturday; **7** = Sunday; **8** = Monday to Friday; **9** = Monday to Saturday; **10** = Saturday and Sunday; **11** = every day.	0...11	num	0 (not in applications)			
E11	Event 1 start hour.	0...23	hours	0 (not in applications)			
E12	Event 1 start minute.	0...59	min	0 (not in applications)			
E13	Event 1 end hour.	0...23	hours	0 (not in applications)			
E14	Event 1 end minute.	0...59	min	0 (not in applications)			
E15	Sets Event 1 type. **0** = Energy Saving; **1** = AUX deactivated; **2** = AUX activated; **3** = Stand-by; **4** = Light on; **5** = Light off.	0...5	num	0 (not in applications)			
E20	Selects Event 2 activation mode. Same as **E10**.	0...11	num	0 (not in applications)			
E21	Event 2 start hour.	0...23	hours	0 (not in applications)			
E22	Event 2 start minute.	0...59	min	0 (not in applications)			
E23	Event 2 end hour.	0...23	hours	0 (not in applications)			
E24	Event 2 end minute.	0...59	min	0 (not in applications)			
E25	Sets Event 2 type. Same as **E15**.	0...5	num	0 (not in applications)			

Note: if one or more parameters in folder **CnF** or marked with **(!)** are changed, the controller must be switched off and then on again to make sure it works properly.

Parameters IDNext 978 P/B

User parameters IDNext 978 P/B

Parameter	Description	Range	UM	Default	AP1	AP2	AP3
SEt	Regulation setpoint with range between the minimum setpoint **LSE** and the maximum setpoint **HSE**. The setpoint value is set in the "Machine status" menu.	**LSE**...**HSE**	°C/°F	3.0	3.0	0.0	-18.0
diF	Compressor relay activation differential; the compressor stops when reaching the entered setpoint (upon indication of the regulation probe) and restarts at a temperature value equal to the setpoint plus the value of the differential. **Note**: always a value other than 0.	0.1...30.0	°C/°F	2.0	2.0	2.0	2.0
LSE	Minimum setpoint value	-67.0...**HSE**	°C/°F	-55.0	-55.0	-55.0	-55.0
HSE	Maximum setpoint value	**LSE**...302	°C/°F	140.0	140.0	140	140
dEt	Defrost timeout. Determines the maximum duration of the defrost	1...250	min	20	20	25	25
dS1	Evaporator 1 defrost end temperature (measured by probe Pb2)	-67.0...302	°C/°F	8.0	8.0	8.0	8.0
dit	Time interval between one defrost and the next	0...250	hours	6	6	6	6
FSt	Fan disabling temperature; a value, read by the evaporator probe.	-67.0...320	°C/°F	2.0	2.0	2.0	2.0
Fdt	Fan activation delay time after a defrost.	0...250	min	0	0	0	0
dt	Dripping time.	0...250	min	5	5	5	5
dFd	Used to select or deselect the exclusion of the evaporator fans during defrosting. **n**(0) = no; **y** (1) = yes (fan excluded or off).	n/y	flag	y	y	y	y
HAL	Maximum temperature alarm. Temperature value (in a relative value) which, when exceeded, will lead to the activation of alarm signaling.	**LAL**...302	°C/°F	150.0	150.0	150.0	150.0
LAL	Minimum temperature alarm. Temperature value (in a relative value) which, when not reached, will lead to the activation of alarm signaling.	-67.0...**HAL**	°C/°F	-50.0	-50.0	-50.0	-50.0
rFt	Low refrigerant alarm signaling delay.	0...250	min	0 (not in applications)			
CA1	Positive or negative temperature value to be added to the value of Pb1.	-30.0...30.0	°C/°F	0.0	0.0	0.0	0.0
CA2	Positive or negative temperature value to be added to the value of Pb2.	-30.0...30.0	°C/°F	0.0	0.0	0.0	0.0
PS1	When enabled (**PS1**≠0) this is the access key for the user parameters.	0...250	num	0	0	0	0
H42	Evaporator probe presence. **n**(0) = not present; **y**(1) = present.	n/y	flag	y	y	y	y
tAb	Reserved: read-only parameter.	/	/	/	/	/	/
rAP	Reset pressure switch alarms	/	/	/	/	/	/

Note: the “User” menu parameters also include **PA2**, which allows access to the "Installer" menu.
Note: for the full list of parameters, see the section "**Installer parameters**".

Installer parameters IDNext 978 P/B

Parameter	Description	Range	UM	Default	AP1	AP2	AP3
SEt	Regulation setpoint with range between the minimum setpoint **LSE** and the maximum setpoint **HSE**. The setpoint value is set in the "Machine status" menu.	**LSE**...**HSE**	°C/°F	3.0	3.0	0.0	-18.0
CP (Compressor)							
diF	Compressor relay activation differential; the compressor stops when reaching the entered setpoint (upon indication of the regulation probe) and restarts at a temperature value equal to the setpoint plus the value of the differential. **Note**: always a value other than 0.	0.1...30.0	°C/°F	2.0	2.0	2.0	2.0
LSE	Minimum setpoint value	-67.0...**HSE**	°C/°F	-55.0	-55.0	-55.0	-55.0
HSE	Maximum setpoint value	**LSE**...302	°C/°F	140.0	140.0	140	140
HC	The regulator will execute operation for cooling (set "**C**(0)") or heating (set "**H**(1)")	C/H	flag	C	C	C	C
ont	Regulator switch-on time for faulty probe: • if **Ont** = 1 and **OFt** = 0 compressor always on • if **Ont** = 1 and **OFt** > 0 compressor in duty cycle	0...250	min	15	15	15	15
oFt	Regulator switch-off time for faulty probe: • if **OFt** = 1 and **Ont** = 0 compressor always off • if **OFt** = 1 and **Ont** > 0 compressor in duty cycle	0...250	min	15	15	15	15
don	Compressor relay activation delay time from call	0...250	s	0	0	0	0
doF	Delay time after switch-off; the indicated time must elapse between compressor relay switch-off and a subsequent switch-on.	0...250	min	0	0	0	0
dbi	Delay time between switch-ons; the indicated time must elapse between two consecutive compressor switch-ons.	0...250	min	0	0	0	0
Cit	Minimum compressor activation time before it can be deactivated. If **Cit** = 0 it is not active.	0...250	min	0	0	0	0
CAt	Maximum compressor activation time before it can be deactivated. If **CAt** = 0 it is not active.	0...250	min	0	0	0	0
odo	Output activation delay time from switching on the controller or after a power failure. **0** = not active	0...250	min	0	0	0	0
dCS	"Deep cooling cycle" setpoint	-67.0...302	°C/°F	0.0	0.0	0.0	0.0
tdC	"Deep cooling cycle" duration	0...250	min	0	0	0	0
dcc	Defrost activation delay after a "Deep cooling cycle"	0...250	min	0	0	0	0
CP2	Compressor 2 activation delay	0...250	min	0	0	0	0
dFA	Condenser fan and compressor activation delay from the request	0...250	s	0	0	0	0
dEF (Defrost)							
dty	Type of defrost. **0** = electrical defrost or due to stoppage - compressor OFF during defrost; **1** = cycle inversion (hot gas) defrost; compressor on during defrost; **2** = defrost with "Free" mode; defrost independent of the compressor.	0/1/2	num	0	0	0	0

Parameter	Description	Range	UM	Default	AP1	AP2	AP3
dOH	Defrost cycle activation delay from the call	0...250	min	0	0	0	0
dEt	Defrost timeout. Determines the maximum duration of the defrost	1...250	min	20	20	25	25
dS1	Evaporator 1 defrost end temperature (measured by probe Pb2)	-67.0...302	°C/°F	8.0	8.0	8.0	8.0
dt2	Unit of measure for defrost duration (**dEt** parameter) (only if dFt ≠ 0). **0** = hours; **1** = minutes; **2** = seconds.	0/1/2	num	-	-	-	-
dPo	Defrost activation request at startup, if the temperature measured by Pb2 allows. **n**(0) = no; **y**(1) = yes	n/y	flag	n	n	n	n
tCd	Minimum period of time with the compressor ON or OFF before defrost is activated.	0...250	min	0	0	0	0
Cod	Time with the compressor OFF before defrost is activated	0...250	min	0	0	0	0
dMr	Enables the defrost count reset in the case of manual defrosting. **n** = count reset does not take place; **y** = count reset takes place	n/y	flag	n	n	n	n
d00	Compressor running time before defrost is activated	0...250	hours	0	0	0	0
d01	Sets the unit of measure in **d00**: **0** = hours; **1** = minutes; **2** = seconds.	0/1/2	num	0	0	0	0
dit	Time interval between one defrost and the next	0...250	hours	6	6	6	6
d11	Sets the unit of measure in **dit**. **0** = hours; **1** = minutes; **2** = seconds.	0/1/2	num	0	0	0	0
d20	Can be used to activate the defrost when the compressor is off. • **0** = disabled. Defrost is not activated. • **1** = enabled. Defrost is activated when the compressor is off.	0/1	flag	0	0	0	0
d40	Enables/disables use of probe Pb2. • **0** = disabled. Defrost does not take Pb2 into account. • **1** = enabled. Defrost runs according to the value read by Pb2 (refers only to the defrost with threshold)	0/1	flag	0	0	0	0
d41	Sets the defrost activation threshold	-67.0...302	°C/°F	0	0	0	0
d42	Sets the maximum time for which the evaporator can remain under the threshold **d41**	0...250	min	0	0	0	0
d43	Sets the type of time count in which the evaporator temperature remains under the threshold value. • **0** = count independent of the compressor status • **1** = count with compressor on (when the compressor is off the count begins again) • **2** = count independent of the compressor status. The count stops when the temperature rises above the threshold **d41** • **3** = count with compressor on and until the temperature rises above the threshold **d41**	0...3	num	0	0	0	0

<table>
<tr><th>Parameter</th><th>Description</th><th>Range</th><th>UM</th><th>Default</th><th>AP1</th><th>AP2</th><th>AP3</th></tr>
<tr><td>d44</td><td>Sets the threshold management mode.
0 = absolute value (for example: d41 = -25°C means that the threshold temperature is exactly -25°C)
1 = relative value (negative offset, relative to the value measured by the defrost probe Pb2 (if d40 = 1) at the end of the first cooling cycle or on startup)</td><td>0/1</td><td>flag</td><td>0</td><td>0</td><td>0</td><td>0</td></tr>
<tr><td colspan="8">Fan</td></tr>
<tr><td>FPt</td><td>Sets whether parameter FSt is expressed as an absolute temperature value or as a value relative to the Setpoint. 0 = absolute; 1 = relative.</td><td>0/1</td><td>flag</td><td>0.0</td><td>0.0</td><td>0.0</td><td>0.0</td></tr>
<tr><td>FSt</td><td>Fan disabling temperature; a value, read by the evaporator probe.</td><td>-67.0...320</td><td>°C/°F</td><td>2.0</td><td>2.0</td><td>2.0</td><td>2.0</td></tr>
<tr><td>FAd</td><td>Evaporator fan activation differential (parameter FSt).</td><td>1.0...25.0</td><td>°C/°F</td><td>2.0</td><td>2.0</td><td>2.0</td><td>2.0</td></tr>
<tr><td>Fdt</td><td>Fan activation delay time after a defrost.</td><td>0...250</td><td>min</td><td>0</td><td>0</td><td>0</td><td>0</td></tr>
<tr><td>dt</td><td>Dripping time.</td><td>0...250</td><td>min</td><td>5</td><td>5</td><td>5</td><td>5</td></tr>
<tr><td>dFd</td><td>Used to select or deselect the exclusion of the evaporator fans during defrosting. n(0) = no; y(1) = yes (fan excluded or off).</td><td>n/y</td><td>flag</td><td>y</td><td>y</td><td>y</td><td>y</td></tr>
<tr><td>FCo</td><td>Evaporator fan operating mode.
<table>
<tr><th rowspan="2">Pb2</th><th rowspan="2">H42</th><th rowspan="2">FCo</th><th colspan="2">day</th><th colspan="2">night</th></tr>
<tr><th>Cn</th><th>Cf</th><th>Cn</th><th>Cf</th></tr>
<tr><td rowspan="4">ok</td><td rowspan="4">y</td><td>0</td><td>T</td><td>Off</td><td>T</td><td>Off</td></tr>
<tr><td>1</td><td>T</td><td>T</td><td>T</td><td>T</td></tr>
<tr><td>2</td><td>T</td><td>DCd</td><td>T</td><td>DCn</td></tr>
<tr><td>3</td><td>T</td><td>DCd</td><td>T</td><td>DCn</td></tr>
<tr><td rowspan="4">ko</td><td rowspan="4">y</td><td>0</td><td>On</td><td>Off</td><td>On</td><td>Off</td></tr>
<tr><td>1</td><td>On</td><td>On</td><td>On</td><td>On</td></tr>
<tr><td>2</td><td>On</td><td>DCd</td><td>On</td><td>DCn</td></tr>
<tr><td>3</td><td>On</td><td>DCd</td><td>On</td><td>DCn</td></tr>
<tr><td rowspan="4">no</td><td rowspan="4">n</td><td>0</td><td>On</td><td>Off</td><td>On</td><td>Off</td></tr>
<tr><td>1</td><td>On</td><td>On</td><td>On</td><td>On</td></tr>
<tr><td>2</td><td>On</td><td>DCd</td><td>On</td><td>DCn</td></tr>
<tr><td>3</td><td>On</td><td>DCd</td><td>On</td><td>DCn</td></tr>
</table>
Headings legend:
Pb2 = probe Pb2 status (ok = present; ko = in E2 error and no = absent; day = day mode; night = night mode; Cn = compressor on; Cf = compressor off.
Status legend:
T = thermostat controlled fans; On = fans on; Off= fans off; DCd = Day duty cycle or DCn = Night duty cycle.</td><td>0...3</td><td>num</td><td>1</td><td>1</td><td>1</td><td>1</td></tr>
<tr><td>Fon</td><td>Day duty cycle: time with fans on.</td><td>0...250</td><td>min</td><td>0</td><td>0</td><td>0</td><td>0</td></tr>
<tr><td>FoF</td><td>Day duty cycle: time with fans off.</td><td>0...250</td><td>min</td><td>0</td><td>0</td><td>0</td><td>0</td></tr>
<tr><td>Fnn</td><td>Night duty cycle: time with fans on.</td><td>0...250</td><td>min</td><td>0</td><td>0</td><td>0</td><td>0</td></tr>
<tr><td>FnF</td><td>Night duty cycle: time with fans off.</td><td>0...250</td><td>min</td><td>0</td><td>0</td><td>0</td><td>0</td></tr>
<tr><td>ESF</td><td>"Night" mode activation. n(0) = no; y(1) = yes.</td><td>n/y</td><td>flag</td><td>n</td><td>n</td><td>n</td><td>n</td></tr>
<tr><td colspan="8">AL (Alarms)</td></tr>
<tr><td>Att</td><td>Sets the absolute or relative value for parameters HAL and LAL.
0 = absolute value
1 = relative value</td><td>0/1</td><td>flag</td><td>0</td><td>0</td><td>0</td><td>0</td></tr>
<tr><td>AFd</td><td>Alarm differential.</td><td>0.1...25.0</td><td>°C/°F</td><td>2.0</td><td>2.0</td><td>2.0</td><td>2.0</td></tr>
</table>

Parameter	Description	Range	UM	Default	AP1	AP2	AP3
HAL	Maximum temperature alarm. Temperature value (in a relative value) which, when exceeded, will lead to the activation of alarm signaling.	**LAL**...302	°C/°F	150.0	150.0	150.0	150.0
LAL	Minimum temperature alarm. Temperature value (in a relative value) which, when not reached, will lead to the activation of alarm signaling.	-67.0...**HAL**	°C/°F	-50.0	-50.0	-50.0	-50.0
PAo	Alarm exclusion time when switching on the controller, after a power failure.	0...10	hours	0	0	0	0
dAo	Temperature alarm exclusion time after defrosting.	0...250	min	0	0	0	0
oAo	Alarm signaling delay after deactivation of the digital input (door closure). Alarm refers to high and low temperature alarms.	0...10	hours	0	0	0	0
tdO	Door open alarm activation delay time.	0...250	min	0	0	0	0
tAo	Temperature alarm signaling delay time.	0...250	min	0	0	0	0
dAt	Defrost ended due to timeout alarm indication. **n**(0) = does not activate alarm; **y**(1) = activates alarm.	n/y	flag	0	0	0	0
EAL	An external alarm inhibits the regulators. **0** = regulators not inhibited; **1** = compressor and defrost inhibited; **2** = fans, compressor and defrost inhibited;	0/1/2	flag	n	n	n	n
AoP	Alarm output polarity. **0** = NO; **1** = NC.	0/1	flag	1	1	1	1
SA3	Probe 3 alarm setpoint.	-67.0...302	°C/°F	0.0	0.0	0.0	0.0
dA3	Probe 3 alarm differential.	0.1...30.0	°C/°F	1.0	1.0	1.0	1.0
rFt	Low refrigerant alarm signaling delay.	0...250	min	0 (not in applications)			
Lit (Lights and digital inputs)							
dOd	Digital input shuts off utilities: **0** = disabled; **1** = fans disabled; **2** = compressor disabled; **3** = fans and compressor disabled.	0...3	num	0	0	3	3
dAd	Digital input activation delay	0...250	min	0	0	0	0
dCO	Compressor activation delay from acknowledgment	0...250	min	0	0	1	0
AUP	Auxiliary (AUX) output activation when the door is opened.	n/y	flag	n	n	y	n
PrE (Pressure switch)							
Pen	Number of errors permitted per minimum/maximum pressure switch input	0...15	num	0	0	0	0
PEi	Minimum/maximum pressure switch error count interval	1...99	min	1	1	1	1
PEt	Compressor activation delay after pressure switch deactivation	0...255	min	0	0	0	0
EnS (Energy Saving)							
oSP	Temperature value to be added to the setpoint in the case of an enabled reduced set (Economy function)	-30.0...30.0	°C/°F	0.0	0.0	0.0	0.0
OdF	Differential offset during an energy saving cycle or reduced set	0.1...30.0	°C/°F	2.0	2.0	2.0	2.0
Add (Communication)							
Adr	Modbus protocol controller address.	1...247	flag	1 (not in applications)			
bAU	Modbus Baudrate selection. **96** (0) = 9600; **192** (1) = 19200; **384** (2) = 38400	96/192/384	num	96 (not in applications)			
Pty	Modbus parity bit. **n**(0) = none; **E**(1) = even; **o**(2) = odd.	n/E/o	num	E (not in applications)			
diS (Display)							

Parameter	Description	Range	UM	Default	AP1	AP2	AP3
dro	Selects the unit of measure used when displaying the temperature read by the probes. (**0** = °C, **1** = °F). **Note**: changing from °C to °F or vice-versa does NOT change the **SEt**, **diF** values, etc. (example: **SEt** = 10°C becomes 10°F).	0/1	flag	0	0	0	0
CA1	Positive or negative temperature value to be added to the value of Pb1.	-30.0...30.0	°C/°F	0.0	0.0	0.0	0.0
CA2	Positive or negative temperature value to be added to the value of Pb2.	-30.0...30.0	°C/°F	0.0	0.0	0.0	0.0
CAi	Activation of the calibration value. **0** = Adds the value to the temperature value displayed; **1** = Adds the value to the temperature used by the regulators and not to the one displayed; **2** = Adds the value to the temperature used by the regulators and to the temperature displayed.	0/1/2	num	2	2	2	2
LoC	Keypad lock. **n**(0) = Keypad lock disabled **y**(1) = Keypad lock enabled (On startup or when 30 seconds have passed since the last action carried out on the user interface).	n/y	flag	y	y	y	y
ddd	Selects the type of value to show on the display. **0** = setpoint; **1** = probe Pb1 ; **2** = probe Pb2 ; **3** = probe Pb3.	0...3	num	1	1	1	1
ddL	Display mode during defrosting. **0** = displays the temperature read by Pb1; **1** = inhibits reading on the value of Pb1 at the start of defrost and until the setpoint is reached; **2** = displays the label **dEF** during the defrost until the setpoint is reached.	0/1/2	num	0	0	0	0
Ldd	Display unlock timeout value - label **dEF**	0...250	min	30	30	30	30
ndt	Display with decimal point. **n**(0) = no; **y**(1) = yes.	n/y	flag	y	y	y	y
FSE	Sets the value (COEFF) used by the low-pass filter to calculate the temperature value to be displayed. **0** = deactivated; **1** = 200; **2** = 100; **3** = 50; **4** = 25; **5** = 12; **6** = 6; **7** = 3.	0...7	num	0	0	0	0
FdS	Filter disabling threshold.	-67.0...302	°C/°F	0	0	0	0
Ftt	Time that has passed beyond the value of **FdS** before the filter is disabled.	0...250	min	0	0	0	0
FHt	Filter sampling interval.	1...250	s	1	1	1	1
PS1	When enabled (**PS1**≠0) this is the access key for the user parameters.	0...250	num	0	0	0	0
PS2	When enabled (**PS2**≠0) this is the access key for the installer parameters.	0...250	num	15	15	15	15
CnF (Configuration)							
H00	Selects the probe type. **0** = PTC; **1** = NTC; **2** = Pt1000.	0/1/2	flag	1	1	1	1
H08	Stand-by operating mode. **0** = display off; the regulators are active and the device signals any alarms by reactivating the display; **1** = display off; the regulators and alarms are inhibited; **2** = the display shows the label “OFF”; the regulators and alarms are inhibited.	0/1/2	num	2	2	2	2

Parameter	Description	Range	UM	Default	AP1	AP2	AP3
H11	Digital input 1/polarity configuration: **0** = disabled; **±1** = defrost; **±2** = reduced set; **±3** = auxiliary; **±4** = door switch; **±5** = external alarm; **±6** = stand-by; **±7** = pressure switch; **±8** = deep cooling (DCC); **±9** = light; **±10** = energy saving. **Note**: • the "+" sign indicates that the input is active if the contact is closed. • the "-" sign indicates that the input is active if the contact is open.	-10...+10	num	0	0	-4	-4
H21	Configuration of digital output 1 (**Out1**): **0** = disabled; **1** = compressor; **2** = defrost; **3** = evaporator fan; **4** = alarm; **5** = auxiliary; **6** = stand-by; **7** = light; **8** = buzzer; **9** = compressor 2; **10** = evaporator 2 defrost; **11** = condenser fans; **12** = heater deadband control; **13** = variable speed compressor (VSC).	0...13	num	1	1	1	1
H22	Configuration of digital output 2 (**Out2**). Same as **H21**. **0** = disabled; **1** = compressor; **2** = defrost; **3** = evaporator fan; **4** = alarm; **5** = auxiliary; **6** = stand-by; **7** = light; **8** = buzzer; **9** = compressor 2; **10** = evaporator 2 defrost; **11** = condenser fans; **12** = heater deadband control.	0...12	num	2	2	2	2
H23	Configuration of digital output 3 (**Out3**). Same as **H22**.	0...12	num	3	3	3	3
H24	Configuration of digital output 4 (**Out4**). Same as **H22**.	0...12	num	4	4	7	7
H25	Enables/disables the buzzer. **0** = disabled; **1** = enabled.	0/1	flag	1	1	1	1
H31	△ key configuration. **0** = disabled; **1** = defrost; **2** = auxiliary; **3** = reduced set; **4** = stand-by; **5** = not used **6** = not used; **7** = deep cooling (DCC); **8** = light.	0...8	num	1	1	1	1
H32	▽ key configuration. Same as **H31**.	0...8	num	0	0	0	0
H33	⏻ key configuration. Same as **H31**.	0...8	num	4	4	4	4
H34	💡 key configuration. Same as **H31**.	0...8	num	0	0	0	0
H35	☆ key configuration. Same as **H31**.	0...8	num	0	0	0	0
H42	Evaporator probe presence. **n**(0) = not present; **y**(1) = present.	n/y	flag	y	y	y	y
H60	Display selected application. **0** = disabled; **1** = AP1; **2** = AP2; **3** = AP3.	0...3	num	1 (not in applications)			
tAb	Reserved: read-only parameter.	/	/	/	/	/	/
FPr (UNICARD)							
UL	Transfer of the programming parameters from the device to the UNICARD	/	/	/ (not in applications)			
Fr	UNICARD formatting. Deletes all data on the UNICARD. **Note**: the use of parameter **Fr** results in the loss of all data entered. This operation cannot be reversed.	/	/	/ (not intAl applications)			
FnC (Functions)							
rAP	Reset pressure switch alarms	/	/	/	/	/	/

Note: if one or more parameters in folder **CnF** or marked with **(!)** are changed, the controller must be switched off and then on again to make sure it works properly.

Parameters IDNext 978 P/C

User parameters IDNext 978 P/C

Parameter	Description	Range	UM	Default	AP1	AP2	AP3
SEt	Regulation setpoint with range between the minimum setpoint **LSE** and the maximum setpoint **HSE**. The setpoint value is set in the "Machine status" menu.	**LSE**...**HSE**	°C/°F	3.0	3.0	0.0	-18.0
diF	Compressor relay activation differential; the compressor stops when reaching the entered setpoint (upon indication of the regulation probe) and restarts at a temperature value equal to the setpoint plus the value of the differential. **Note**: always a value other than 0.	0.1...30.0	°C/°F	2.0	2.0	2.0	2.0
LSE	Minimum setpoint value	-67.0...**HSE**	°C/°F	-55.0	-55.0	-55.0	-55.0
HSE	Maximum setpoint value	**LSE**...302	°C/°F	140.0	140.0	140	140
dEt	Defrost timeout. Determines the maximum duration of the defrost	1...250	min	20	20	25	25
dS1	Evaporator 1 defrost end temperature (measured by probe Pb2)	-67.0...302	°C/°F	8.0	8.0	8.0	8.0
dS2	Evaporator 2 defrost end temperature (measured by Pb3 if **H43** = 2EP)	-67.0...302	°C/°F	0.0	0.0	0.0	0.0
dit	Time interval between one defrost and the next	0...250	hours	6	6	6	6
FSt	Fan disabling temperature; a value, read by the evaporator probe.	-67.0...320	°C/°F	2.0	2.0	2.0	2.0
Fdt	Fan activation delay time after a defrost.	0...250	min	0	0	0	0
dt	Dripping time.	0...250	min	5	5	5	5
dFd	Used to select or deselect the exclusion of the evaporator fans during defrosting. **n**(0) = no; **y** (1) = yes (fan excluded or off).	n/y	flag	y	y	y	y
HAL	Maximum temperature alarm. Temperature value (in a relative value) which, when exceeded, will lead to the activation of alarm signaling.	**LAL**...302	°C/°F	150.0	150.0	150.0	150.0
LAL	Minimum temperature alarm. Temperature value (in a relative value) which, when not reached, will lead to the activation of alarm signaling.	-67.0...**HAL**	°C/°F	-50.0	-50.0	-50.0	-50.0
rFt	Low refrigerant alarm signaling delay.	0...250	min	0 (not in applications)			
CA1	Positive or negative temperature value to be added to the value of Pb1.	-30.0...30.0	°C/°F	0.0	0.0	0.0	0.0
CA2	Positive or negative temperature value to be added to the value of Pb2.	-30.0...30.0	°C/°F	0.0	0.0	0.0	0.0
PS1	When enabled (**PS1**≠0) this is the access key for the user parameters.	0...250	num	0	0	0	0
H42	Evaporator probe presence. **n**(0) = not present; **y**(1) = present.	n/y	flag	y	y	y	y
tAb	Reserved: read-only parameter.	/	/	/	/	/	/
rAP	Reset pressure switch alarms	/	/	/	/	/	/

Note: the “User” menu parameters also include **PA2**, which allows access to the "Installer" menu.
Note: for the full list of parameters, see the section "**Installer parameters**".

Installer parameters IDNext 978 P/C

Parameter	Description	Range	UM	Default	AP1	AP2	AP3
SEt	Regulation setpoint with range between the minimum setpoint **LSE** and the maximum setpoint **HSE**. The setpoint value is set in the "Machine status" menu.	**LSE**...**HSE**	°C/°F	3.0	3.0	0.0	-18.0
CP (Compressor)							
diF	Compressor relay activation differential; the compressor stops when reaching the entered setpoint (upon indication of the regulation probe) and restarts at a temperature value equal to the setpoint plus the value of the differential. **Note**: always a value other than 0.	0.1...30.0	°C/°F	2.0	2.0	2.0	2.0
LSE	Minimum setpoint value	-67.0...**HSE**	°C/°F	-55.0	-55.0	-55.0	-55.0
HSE	Maximum setpoint value	**LSE**...302	°C/°F	140.0	140.0	140	140
HC	The regulator will execute operation for cooling (set "**C**(0)") or heating (set "**H**(1)")	C/H	flag	C	C	C	C
ont	Regulator switch-on time for faulty probe: • if **Ont** = 1 and **OFt** = 0 compressor always on • if **Ont** = 1 and **OFt** > 0 compressor in duty cycle	0...250	min	15	15	15	15
oFt	Regulator switch-off time for faulty probe: • if **OFt** = 1 and **Ont** = 0 compressor always off • if **OFt** = 1 and **Ont** > 0 compressor in duty cycle	0...250	min	15	15	15	15
don	Compressor relay activation delay time from call	0...250	s	0	0	0	0
doF	Delay time after switch-off; the indicated time must elapse between compressor relay switch-off and a subsequent switch-on.	0...250	min	0	0	0	0
dbi	Delay time between switch-ons; the indicated time must elapse between two consecutive compressor switch-ons.	0...250	min	0	0	0	0
Cit	Minimum compressor activation time before it can be deactivated. If **Cit** = 0 it is not active.	0...250	min	0	0	0	0
CAt	Maximum compressor activation time before it can be deactivated. If **CAt** = 0 it is not active.	0...250	min	0	0	0	0
odo	Output activation delay time from switching on the controller or after a power failure. **0** = not active	0...250	min	0	0	0	0
dCS	"Deep cooling cycle" setpoint	-67.0...302	°C/°F	0.0	0.0	0.0	0.0
tdC	"Deep cooling cycle" duration	0...250	min	0	0	0	0
dcc	Defrost activation delay after a "Deep cooling cycle"	0...250	min	0	0	0	0
CP2	Compressor 2 activation delay	0...250	min	0	0	0	0
dFA	Condenser fan and compressor activation delay from the request	0...250	s	0	0	0	0
dEF (Defrost)							
dty	Type of defrost. **0** = electrical defrost or due to stoppage - compressor OFF during defrost; **1** = cycle inversion (hot gas) defrost; compressor on during defrost; **2** = defrost with "Free" mode; defrost independent of the compressor.	0/1/2	num	0	0	0	0
dOH	Defrost cycle activation delay from the call	0...250	min	0	0	0	0

Parameter	Description	Range	UM	Default	AP1	AP2	AP3
dEt	Defrost timeout. Determines the maximum duration of the defrost	1...250	min	20	20	25	25
dS1	Evaporator 1 defrost end temperature (measured by probe Pb2)	-67.0...302	°C/°F	8.0	8.0	8.0	8.0
dS2	Evaporator 2 defrost end temperature (measured by Pb3 if **H43** = 2EP)	-67.0...302	°C/°F	0.0	0.0	0.0	0.0
dt2	Unit of measure for defrost duration (**dEt** parameter) (only if dFt ≠ 0). **0** = hours; **1** = minutes; **2** = seconds.	0/1/2	num	1	1	1	1
dPo	Defrost activation request at startup, if the temperature measured by Pb2 allows. **n**(0) = no; **y**(1) = yes	n/y	flag	n	n	n	n
tCd	Minimum period of time with the compressor ON or OFF before defrost is activated.	0...250	min	0	0	0	0
Cod	Time with the compressor OFF before defrost is activated	0...250	min	0	0	0	0
dMr	Enables the defrost count reset in the case of manual defrosting. **n** = count reset does not take place; **y** = count reset takes place	n/y	flag	n	n	n	n
d00	Compressor running time before defrost is activated	0...250	hours	0	0	0	0
d01	Sets the unit of measure in **d00**: **0** = hours; **1** = minutes; **2** = seconds.	0/1/2	num	0	0	0	0
dit	Time interval between one defrost and the next	0...250	hours	6	6	6	6
d11	Sets the unit of measure in **dit**. **0** = hours; **1** = minutes; **2** = seconds.	0/1/2	num	0	0	0	0
d20	Can be used to activate the defrost when the compressor is off. • **0** = disabled. Defrost is not activated. • **1** = enabled. Defrost is activated when the compressor is off.	0/1	flag	0	0	0	0
d40	Enables/disables use of probe Pb2. • **0** = disabled. Defrost does not take Pb2 into account. • **1** = enabled. Defrost runs according to the value read by Pb2 (refers only to the defrost with threshold)	0/1	flag	0	0	0	0
d41	Sets the defrost activation threshold	-67.0...302	°C/°F	0	0	0	0
d42	Sets the maximum time for which the evaporator can remain under the threshold **d41**	0...250	min	0	0	0	0
d43	Sets the type of time count in which the evaporator temperature remains under the threshold value. • **0** = count independent of the compressor status • **1** = count with compressor on (when the compressor is off the count begins again) • **2** = count independent of the compressor status. The count stops when the temperature rises above the threshold **d41** • **3** = count with compressor on and until the temperature rises above the threshold **d41**	0...3	num	0	0	0	0
d44	Sets the threshold management mode. • **0** = absolute value (for example: **d41** = -25°C means that the threshold temperature is exactly -25°C) • **1** = relative value (negative offset, relative to the value measured by the defrost probe Pb2 (if **d40** = 1) at the end of the first cooling cycle or on startup)	0/1	flag	0	0	0	0

Parameter	Description	Range	UM	Default	AP1	AP2	AP3
d90	Sets the defrost mode with RTC. • **0** = RTC disabled • **1** = Reserved • **2** = RTC at fixed intervals (**d91**) • **3** = Regular RTC	0...3	num	0	0	0	0
d91	Sets the number of daily defrosts (only if **d90** = 2)	0...255	num	0	0	0	0
d92	Sets the first weekend/holiday day. • **0** = Sunday • **1** = Monday • **2** = Tuesday • **3** = Wednesday • **4** = Thursday • **5** = Friday • **6** = Saturday • **7** = Disabled	0...7	num	0	0	0	0
d93	Sets the second weekend/holiday day. Same as **d92**.	0...7	num	0	0	0	0
d94	Sets the duration of the regular defrost in days	1...7	num	0	0	0	0
d1h	First weekday defrost start hour	0...23	hours	0	0	0	0
d1n	First weekday defrost start minute	0...59	min	0	0	0	0
F1h	First weekend/holiday defrost start hour	0...23	hours	0	0	0	0
F1n	First weekend/holiday defrost start minute	0...59	min	0	0	0	0
Fan							
FPt	Sets whether parameter **FSt** is expressed as an absolute temperature value or as a value relative to the Setpoint. **0** = absolute; **1** = relative.	0/1	flag	0.0	0.0	0.0	0.0
FSt	Fan disabling temperature; a value, read by the evaporator probe.	-67.0...320	°C/°F	2.0	2.0	2.0	2.0
FAd	Evaporator fan activation differential (parameter **FSt**).	1.0...25.0	°C/°F	2.0	2.0	2.0	2.0
Fdt	Fan activation delay time after a defrost.	0...250	min	0	0	0	0
dt	Dripping time.	0...250	min	5	5	5	5
dFd	Used to select or deselect the exclusion of the evaporator fans during defrosting. **n**(0) = no; **y** (1) = yes (fan excluded or off).	n/y	flag	y	y	y	y

<table>
<tr><th>Parameter</th><th>Description</th><th>Range</th><th>UM</th><th>Default</th><th>AP1</th><th>AP2</th><th>AP3</th></tr>
<tr><td>FCo</td><td>Evaporator fan operating mode.
<table>
<tr><th rowspan="2">Pb2</th><th rowspan="2">H42</th><th rowspan="2">FCo</th><th colspan="2">day</th><th colspan="2">night</th></tr>
<tr><th>Cn</th><th>Cf</th><th>Cn</th><th>Cf</th></tr>
<tr><td rowspan="4">ok</td><td rowspan="4">y</td><td>0</td><td>T</td><td>Off</td><td>T</td><td>Off</td></tr>
<tr><td>1</td><td>T</td><td>T</td><td>T</td><td>T</td></tr>
<tr><td>2</td><td>T</td><td>DCd</td><td>T</td><td>DCn</td></tr>
<tr><td>3</td><td>T</td><td>DCd</td><td>T</td><td>DCn</td></tr>
<tr><td rowspan="4">ko</td><td rowspan="4">y</td><td>0</td><td>On</td><td>Off</td><td>On</td><td>Off</td></tr>
<tr><td>1</td><td>On</td><td>On</td><td>On</td><td>On</td></tr>
<tr><td>2</td><td>On</td><td>DCd</td><td>On</td><td>DCn</td></tr>
<tr><td>3</td><td>On</td><td>DCd</td><td>On</td><td>DCn</td></tr>
<tr><td rowspan="4">no</td><td rowspan="4">n</td><td>0</td><td>On</td><td>Off</td><td>On</td><td>Off</td></tr>
<tr><td>1</td><td>On</td><td>On</td><td>On</td><td>On</td></tr>
<tr><td>2</td><td>On</td><td>DCd</td><td>On</td><td>DCn</td></tr>
<tr><td>3</td><td>On</td><td>DCd</td><td>On</td><td>DCn</td></tr>
</table>
Headings legend:
Pb2 = probe Pb2 status (ok = present; ko = in E2 error and no = absent; day = day mode; night = night mode; Cn = compressor on; Cf = compressor off.
Status legend:
T = thermostat controlled fans; On = fans on; Off= fans off; DCd = Day duty cycle or DCn = Night duty cycle.</td><td>0...3</td><td>num</td><td>1</td><td>1</td><td>1</td><td>1</td></tr>
<tr><td>Fon</td><td>Day duty cycle: time with fans on.</td><td>0...250</td><td>min</td><td>0</td><td>0</td><td>0</td><td>0</td></tr>
<tr><td>FoF</td><td>Day duty cycle: time with fans off.</td><td>0...250</td><td>min</td><td>0</td><td>0</td><td>0</td><td>0</td></tr>
<tr><td>Fnn</td><td>Night duty cycle: time with fans on.</td><td>0...250</td><td>min</td><td>0</td><td>0</td><td>0</td><td>0</td></tr>
<tr><td>FnF</td><td>Night duty cycle: time with fans off.</td><td>0...250</td><td>min</td><td>0</td><td>0</td><td>0</td><td>0</td></tr>
<tr><td>ESF</td><td>"Night" mode activation. n(0) = no; y(1) = yes.</td><td>n/y</td><td>flag</td><td>n</td><td>n</td><td>n</td><td>n</td></tr>
<tr><td colspan="8">AL (Alarms)</td></tr>
<tr><td>Att</td><td>Sets the absolute or relative value for parameters HAL and LAL.
0 = absolute value
1 = relative value</td><td>0/1</td><td>flag</td><td>0</td><td>0</td><td>0</td><td>0</td></tr>
<tr><td>AFd</td><td>Alarm differential.</td><td>0.1...25.0</td><td>°C/°F</td><td>2.0</td><td>2.0</td><td>2.0</td><td>2.0</td></tr>
<tr><td>HAL</td><td>Maximum temperature alarm.
Temperature value (in a relative value) which, when exceeded, will lead to the activation of alarm signaling.</td><td>LAL...302</td><td>°C/°F</td><td>150.0</td><td>150.0</td><td>150.0</td><td>150.0</td></tr>
<tr><td>LAL</td><td>Minimum temperature alarm.
Temperature value (in a relative value) which, when not reached, will lead to the activation of alarm signaling.</td><td>-67.0...HAL</td><td>°C/°F</td><td>-50.0</td><td>-50.0</td><td>-50.0</td><td>-50.0</td></tr>
<tr><td>PAo</td><td>Alarm exclusion time when switching on the controller, after a power failure.</td><td>0...10</td><td>hours</td><td>0</td><td>0</td><td>0</td><td>0</td></tr>
<tr><td>dAo</td><td>Temperature alarm exclusion time after defrosting.</td><td>0...250</td><td>min</td><td>0</td><td>0</td><td>0</td><td>0</td></tr>
<tr><td>oAo</td><td>Alarm signaling delay after deactivation of the digital input (door closure). Alarm refers to high and low temperature alarms.</td><td>0...10</td><td>hours</td><td>0</td><td>0</td><td>0</td><td>0</td></tr>
<tr><td>tdO</td><td>Door open alarm activation delay time.</td><td>0...250</td><td>min</td><td>0</td><td>0</td><td>0</td><td>0</td></tr>
<tr><td>tAo</td><td>Temperature alarm signaling delay time.</td><td>0...250</td><td>min</td><td>0</td><td>0</td><td>0</td><td>0</td></tr>
<tr><td>dAt</td><td>Defrost ended due to timeout alarm indication. n(0) = does not activate alarm; y(1) = activates alarm.</td><td>n/y</td><td>flag</td><td>0</td><td>0</td><td>0</td><td>0</td></tr>
</table>

Parameter	Description	Range	UM	Default	AP1	AP2	AP3
EAL	An external alarm inhibits the regulators. **0** = regulators not inhibited; **1** = compressor and defrost inhibited; **2** = fans, compressor and defrost inhibited;	0/1/2	flag	n	n	n	n
AoP	Alarm output polarity. **0** = NO; **1** = NC.	0/1	flag	1	1	1	1
SA3	Probe 3 alarm setpoint.	-67.0...302	°C/°F	0.0	0.0	0.0	0.0
dA3	Probe 3 alarm differential.	0.1...30.0	°C/°F	1.0	1.0	1.0	1.0
rFt	Low refrigerant alarm signaling delay.	0...250	min	0 (not in applications)			
Lit (Lights and digital inputs)							
dOd	Digital input shuts off utilities: **0** = disabled; **1** = fans disabled; **2** = compressor disabled; **3** = fans and compressor disabled.	0...3	num	0	0	3	3
dAd	Digital input activation delay	0...250	min	0	0	0	0
dCO	Compressor activation delay from acknowledgment	0...250	min	0	0	1	0
AUP	Auxiliary (AUX) output activation when the door is opened.	n/y	flag	n	n	n	n
PrE (Pressure switch)							
Pen	Number of errors permitted per minimum/maximum pressure switch input	0...15	num	0	0	0	0
PEi	Minimum/maximum pressure switch error count interval	1...99	min	1	1	1	1
PEt	Compressor activation delay after pressure switch deactivation	0...255	min	0	0	0	0
EnS (Energy Saving)							
oSP	Temperature value to be added to the setpoint in the case of an enabled reduced set (Economy function)	-30.0...30.0	°C/°F	0.0	0.0	0.0	0.0
OdF	Differential offset during an energy saving cycle or reduced set	0.1...30.0	°C/°F	2.0	2.0	2.0	2.0
Add (Communication)							
Adr	Modbus protocol controller address.	1...247	flag	1 (not in applications)			
bAU	Modbus Baudrate selection. **96** (0) = 9600; **192** (1) = 19200; **384** (2) = 38400	96/192/384	num	96 (not in applications)			
Pty	Modbus parity bit. **n**(0) = none; **E**(1) = even; **o**(2) = odd.	n/E/o	num	E (not in applications)			
diS (Display)							
dro	Selects the unit of measure used when displaying the temperature read by the probes. (**0** = °C, **1** = °F). **Note**: changing from °C to °F or vice-versa does NOT change the **SEt**, **diF** values, etc. (example: **SEt** = 10°C becomes 10°F).	0/1	flag	0	0	0	0
CA1	Positive or negative temperature value to be added to the value of Pb1.	-30.0...30.0	°C/°F	0.0	0.0	0.0	0.0
CA2	Positive or negative temperature value to be added to the value of Pb2.	-30.0...30.0	°C/°F	0.0	0.0	0.0	0.0
CA3	Positive or negative temperature value to be added to the value of Pb3.	-30.0...30.0	°C/°F	0.0	0.0	0.0	0.0
CAi	Activation of the calibration value. **0** = Adds the value to the temperature value displayed; **1** = Adds the value to the temperature used by the regulators and not to the one displayed; **2** = Adds the value to the temperature used by the regulators and to the temperature displayed.	0/1/2	num	2	2	2	2
LoC	Keypad lock. **n**(0) = Keypad lock disabled **y**(1) = Keypad lock enabled (On startup or when 30 seconds have passed since the last action carried out on the user interface).	n/y	flag	y	y	y	y

Parameter	Description	Range	UM	Default	AP1	AP2	AP3
ddd	Selects the type of value to show on the display. **0** = setpoint; **1** = probe Pb1 ; **2** = probe Pb2 ; **3** = probe Pb3.	0...3	num	1	1	1	1
ddL	Display mode during defrosting. **0** = displays the temperature read by Pb1; **1** = inhibits reading on the value of Pb1 at the start of defrost and until the setpoint is reached; **2** = displays the label **dEF** during the defrost until the setpoint is reached.	0/1/2	num	0	0	0	0
Ldd	Display unlock timeout value - label **dEF**	0...250	min	30	30	30	30
ndt	Display with decimal point. **n**(0) = no; **y**(1) = yes.	n/y	flag	y	y	y	y
FSE	Sets the value (COEFF) used by the low-pass filter to calculate the temperature value to be displayed. **0** = deactivated; **1** = 200; **2** = 100; **3** = 50; **4** = 25; **5** = 12; **6** = 6; **7** = 3.	0...7	num	0	0	0	0
FdS	Filter disabling threshold.	-67.0...302	°C/°F	0	0	0	0
Ftt	Time that has passed beyond the value of **FdS** before the filter is disabled.	0...250	min	0	0	0	0
FHt	Filter sampling interval.	1...250	s	1	1	1	1
PS1	When enabled (**PS1**≠0) this is the access key for the user parameters.	0...250	num	0	0	0	0
PS2	When enabled (**PS2**≠0) this is the access key for the installer parameters.	0...250	num	15	15	15	15
CnF (Configuration)							
H00	Selects the probe type. **0** = PTC; **1** = NTC; **2** = Pt1000.	0/1/2	flag	1	1	1	1
H08	Stand-by operating mode. **0** = display off; the regulators are active and the device signals any alarms by reactivating the display; **1** = display off; the regulators and alarms are inhibited; **2** = the display shows the label “OFF”; the regulators and alarms are inhibited.	0/1/2	num	2	2	2	2
H11	Digital input 1/polarity configuration: **0** = disabled; **±1** = defrost; **±2** = reduced set; **±3** = auxiliary; **±4** = door switch; **±5** = external alarm; **±6** = stand-by; **±7** = pressure switch; **±8** = deep cooling (DCC); **±9** = light; **±10** = energy saving. **Note**: • the “+” sign indicates that the input is active if the contact is closed. • the “-” sign indicates that the input is active if the contact is open.	-10...+10	num	0	0	-4	-4
H21	Configuration of digital output 1 (**Out1**): **0** = disabled; **1** = compressor; **2** = defrost; **3** = evaporator fan; **4** = alarm; **5** = auxiliary; **6** = stand-by; **7** = light; **8** = buzzer; **9** = compressor 2; **10** = evaporator 2 defrost; **11** = condenser fans; **12** = heater deadband control; **13** = variable speed compressor (VSC).	0...13	num	1	1	1	1
H22	Configuration of digital output 2 (**Out2**). Same as **H21**. **0** = disabled; **1** = compressor; **2** = defrost; **3** = evaporator fan; **4** = alarm; **5** = auxiliary; **6** = stand-by; **7** = light; **8** = buzzer; **9** = compressor 2; **10** = evaporator 2 defrost; **11** = condenser fans; **12** = heater deadband control.	0...12	num	2	2	2	2
H23	Configuration of digital output 3 (**Out3**). Same as **H22**.	0...12	num	3	3	3	3
H24	Configuration of digital output 4 (**Out4**). Same as **H22**.	0...12	num	4	4	7	7

Parameter	Description	Range	UM	Default	AP1	AP2	AP3
H31	△ key configuration. **0** = disabled; **1** = defrost; **2** = auxiliary; **3** = reduced set; **4** = stand-by; **5** = not used **6** = not used; **7** = deep cooling (DCC); **8** = light.	0...8	num	1	1	1	1
H32	▽ key configuration. Same as **H31**.	0...8	num	0	0	0	0
H33	⏻ key configuration. Same as **H31**.	0...8	num	4	4	4	4
H34	☼ key configuration. Same as **H31**.	0...8	num	0	0	0	0
H35	☆ key configuration. Same as **H31**.	0...8	num	0	0	0	0
H42	Evaporator probe presence. **n**(0) = not present; **y**(1) = present.	n/y	flag	y	y	y	y
H43	Probe Pb3 present. **n**(0) = not present; **y**(1) = present; **2EP**(2) = second evaporator.	n/y/2EP	flag	n	n	n	n
H45	Defrost input mode for applications with dual evaporator. **0** = first evaporator only; **1** = if at least one of the evaporators is below its defrost end temperature; **2** = only if both evaporators are under the respective defrost end temperature; **3** = evaporator 1 and evaporator 2 alternately.	0...3	num	1	1	1	1
H48	RTC (Real Time Clock) present. **0** = no RTC; **1** = RTC present.	0/1	flag	1	1	1	1
H60	Display selected application. **0** = disabled; **1** = AP1; **2** = AP2; **3** = AP3.	0...3	num	1 (not in applications)			
tAb	Reserved: read-only parameter.	/	/	/	/	/	/
FPr (UNICARD)							
UL	Transfer of the programming parameters from the device to the UNICARD	/	/	/ (not in applications)			
Fr	UNICARD formatting. Deletes all data on the UNICARD. **Note**: the use of parameter **Fr** results in the loss of all data entered. This operation cannot be reversed.	/	/	/ (not in applications)			
FnC (Functions)							
rAP	Reset pressure switch alarms	/	/	/	/	/	/
nAd (night and day)							
E10	Selects Event 1 activation mode. **0** = disabled; **1** = Monday; **2** = Tuesday; **3** = Wednesday; **4** = Thursday; **5** = Friday; **6** = Saturday; **7** = Sunday; **8** = Monday to Friday; **9** = Monday to Saturday; **10** = Saturday and Sunday; **11** = every day.	0...11	num	0 (not in applications)			
E11	Event 1 start hour.	0...23	hours	0 (not in applications)			
E12	Event 1 start minute.	0...59	min	0 (not in applications)			
E13	Event 1 end hour.	0...23	hours	0 (not in applications)			
E14	Event 1 end minute.	0...59	min	0 (not in applications)			
E15	Sets Event 1 type. **0** = Energy Saving; **1** = AUX deactivated; **2** = AUX activated; **3** = Stand-by; **4** = Light on; **5** = Light off.	0...5	num	0 (not in applications)			
E20	Selects Event 2 activation mode. Same as **E10**.	0...11	num	0 (not in applications)			
E21	Event 2 start hour.	0...23	hours	0 (not in applications)			
E22	Event 2 start minute.	0...59	min	0 (not in applications)			
E23	Event 2 end hour.	0...23	hours	0 (not in applications)			
E24	Event 2 end minute.	0...59	min	0 (not in applications)			
E25	Sets Event 2 type. Same as **E15**.	0...5	num	0 (not in applications)			

Note: if one or more parameters in folder **CnF** or marked with **(!)** are changed, the controller must be switched off and then on again to make sure it works properly.

Parameters IDNext 978 P/CI

User parameters IDNext 978 P/CI

Parameter	Description	Range	UM	Default	AP1	AP2	AP3
SEt	Regulation setpoint with range between the minimum setpoint **LSE** and the maximum setpoint **HSE**. The setpoint value is set in the "Machine status" menu.	**LSE**...**HSE**	°C/°F	3.0	3.0	0.0	-18.0
diF	Compressor relay activation differential; the compressor stops when reaching the entered setpoint (upon indication of the regulation probe) and restarts at a temperature value equal to the setpoint plus the value of the differential. **Note**: always a value other than 0.	0.1...30.0	°C/°F	2.0	2.0	2.0	2.0
LSE	Minimum setpoint value	-67.0...**HSE**	°C/°F	-55.0	-55.0	-55.0	-55.0
HSE	Maximum setpoint value	**LSE**...302	°C/°F	140.0	140.0	140	140
dEt	Defrost timeout. Determines the maximum duration of the defrost	1...250	min	20	20	25	25
dS1	Evaporator 1 defrost end temperature (measured by probe Pb2)	-67.0...302	°C/°F	8.0	8.0	8.0	8.0
dS2	Evaporator 2 defrost end temperature (measured by Pb3 if **H43** = 2EP)	-67.0...302	°C/°F	0.0	0.0	0.0	0.0
dit	Time interval between one defrost and the next	0...250	hours	6	6	6	6
FSt	Fan disabling temperature; a value, read by the evaporator probe.	-67.0...320	°C/°F	2.0	2.0	2.0	2.0
Fdt	Fan activation delay time after a defrost.	0...250	min	0	0	0	0
dt	Dripping time.	0...250	min	5	5	5	5
dFd	Used to select or deselect the exclusion of the evaporator fans during defrosting. **n**(0) = no; **y** (1) = yes (fan excluded or off).	n/y	flag	y	y	y	y
HAL	Maximum temperature alarm. Temperature value (in a relative value) which, when exceeded, will lead to the activation of alarm signaling.	**LAL**...302	°C/°F	150.0	150.0	150.0	150.0
LAL	Minimum temperature alarm. Temperature value (in a relative value) which, when not reached, will lead to the activation of alarm signaling.	-67.0...**HAL**	°C/°F	-50.0	-50.0	-50.0	-50.0
rFt	Low refrigerant alarm signaling delay.	0...250	min	0 (not in applications)			
CA1	Positive or negative temperature value to be added to the value of Pb1.	-30.0...30.0	°C/°F	0.0	0.0	0.0	0.0
CA2	Positive or negative temperature value to be added to the value of Pb2.	-30.0...30.0	°C/°F	0.0	0.0	0.0	0.0
PS1	When enabled (**PS1**≠0) this is the access key for the user parameters.	0...250	num	0	0	0	0
H42	Evaporator probe presence. **n**(0) = not present; **y**(1) = present.	n/y	flag	y	y	y	y
tAb	Reserved: read-only parameter.	/	/	/	/	/	/
rAP	Reset pressure switch alarms	/	/	/	/	/	/

Note: the “User” menu parameters also include **PA2**, which allows access to the "Installer" menu.
Note: for the full list of parameters, see the section "**Installer parameters**".

Installer parameters IDNext 978 P/CI

Parameter	Description	Range	UM	Default	AP1	AP2	AP3
SEt	Regulation setpoint with range between the minimum setpoint **LSE** and the maximum setpoint **HSE**. The setpoint value is set in the "Machine status" menu.	**LSE**...**HSE**	°C/°F	3.0	3.0	0.0	-18.0
CP (Compressor)							
diF	Compressor relay activation differential; the compressor stops when reaching the entered setpoint (upon indication of the regulation probe) and restarts at a temperature value equal to the setpoint plus the value of the differential. **Note**: always a value other than 0.	0.1...30.0	°C/°F	2.0	2.0	2.0	2.0
LSE	Minimum setpoint value	-67.0...**HSE**	°C/°F	-55.0	-55.0	-55.0	-55.0
HSE	Maximum setpoint value	**LSE**...302	°C/°F	140.0	140.0	140	140
HC	The regulator will execute operation for cooling (set "**C**(0)") or heating (set "**H**(1)")	C/H	flag	C	C	C	C
ont	Regulator switch-on time for faulty probe: • if **Ont** = 1 and **OFt** = 0 compressor always on • if **Ont** = 1 and **OFt** > 0 compressor in duty cycle	0...250	min	15	15	15	15
oFt	Regulator switch-off time for faulty probe: • if **OFt** = 1 and **Ont** = 0 compressor always off • if **OFt** = 1 and **Ont** > 0 compressor in duty cycle	0...250	min	15	15	15	15
don	Compressor relay activation delay time from call	0...250	s	0	0	0	0
doF	Delay time after switch-off; the indicated time must elapse between compressor relay switch-off and a subsequent switch-on.	0...250	min	0	0	0	0
dbi	Delay time between switch-ons; the indicated time must elapse between two consecutive compressor switch-ons.	0...250	min	0	0	0	0
Cit	Minimum compressor activation time before it can be deactivated. If **Cit** = 0 it is not active.	0...250	min	0	0	0	0
CAt	Maximum compressor activation time before it can be deactivated. If **CAt** = 0 it is not active.	0...250	min	0	0	0	0
odo	Output activation delay time from switching on the controller or after a power failure. **0** = not active	0...250	min	0	0	0	0
dCS	"Deep cooling cycle" setpoint	-67.0...302	°C/°F	0.0	0.0	0.0	0.0
tdC	"Deep cooling cycle" duration	0...250	min	0	0	0	0
dcc	Defrost activation delay after a "Deep cooling cycle"	0...250	min	0	0	0	0
CP2	Compressor 2 activation delay	0...250	min	0	0	0	0
dFA	Condenser fan and compressor activation delay from the request	0...250	s	0	0	0	0
dEF (Defrost)							
dty	Type of defrost. **0** = electrical defrost or due to stoppage - compressor OFF during defrost; **1** = cycle inversion (hot gas) defrost; compressor on during defrost; **2** = defrost with "Free" mode; defrost independent of the compressor.	0/1/2	num	0	0	0	0
dOH	Defrost cycle activation delay from the call	0...250	min	0	0	0	0

Parameter	Description	Range	UM	Default	AP1	AP2	AP3
dEt	Defrost timeout. Determines the maximum duration of the defrost	1...250	min	20	20	25	25
dS1	Evaporator 1 defrost end temperature (measured by probe Pb2)	-67.0...302	°C/°F	8.0	8.0	8.0	8.0
dS2	Evaporator 2 defrost end temperature (measured by Pb3 if **H43** = 2EP)	-67.0...302	°C/°F	0.0	0.0	0.0	0.0
dt2	Unit of measure for defrost duration (**dEt** parameter) (only if dFt ≠ 0). **0** = hours; **1** = minutes; **2** = seconds.	0/1/2	num	1	1	1	1
dPo	Defrost activation request at startup, if the temperature measured by Pb2 allows. **n**(0) = no; **y**(1) = yes	n/y	flag	n	n	n	n
tCd	Minimum period of time with the compressor ON or OFF before defrost is activated.	0...250	min	0	0	0	0
Cod	Time with the compressor OFF before defrost is activated	0...250	min	0	0	0	0
dMr	Enables the defrost count reset in the case of manual defrosting. **n** = count reset does not take place; **y** = count reset takes place	n/y	flag	n	n	n	n
d00	Compressor running time before defrost is activated	0...250	hours	0	0	0	0
d01	Sets the unit of measure in **d00**: **0** = hours; **1** = minutes; **2** = seconds.	0/1/2	num	0	0	0	0
dit	Time interval between one defrost and the next	0...250	hours	6	6	6	6
d11	Sets the unit of measure in **dit**. **0** = hours; **1** = minutes; **2** = seconds.	0/1/2	num	0	0	0	0
d20	Can be used to activate the defrost when the compressor is off. • **0** = disabled. Defrost is not activated. • **1** = enabled. Defrost is activated when the compressor is off.	0/1	flag	0	0	0	0
d40	Enables/disables use of probe Pb2. • **0** = disabled. Defrost does not take Pb2 into account. • **1** = enabled. Defrost runs according to the value read by Pb2 (refers only to the defrost with threshold)	0/1	flag	0	0	0	0
d41	Sets the defrost activation threshold	-67.0...302	°C/°F	0	0	0	0
d42	Sets the maximum time for which the evaporator can remain under the threshold **d41**	0...250	min	0	0	0	0
d43	Sets the type of time count in which the evaporator temperature remains under the threshold value. • **0** = count independent of the compressor status • **1** = count with compressor on (when the compressor is off the count begins again) • **2** = count independent of the compressor status. The count stops when the temperature rises above the threshold **d41** • **3** = count with compressor on and until the temperature rises above the threshold **d41**	0...3	num	0	0	0	0

Parameter	Description	Range	UM	Default	AP1	AP2	AP3
d44	Sets the threshold management mode. • **0** = absolute value (for example: **d41** = -25°C means that the threshold temperature is exactly -25°C) • **1** = relative value (negative offset, relative to the value measured by the defrost probe Pb2 (if **d40** = 1) at the end of the first cooling cycle or on startup)	0/1	flag	0	0	0	0
d90	Sets the defrost mode with RTC. • **0** = RTC disabled • **1** = Reserved • **2** = RTC at fixed intervals (**d91**) • **3** = Regular RTC	0...3	num	0	0	0	0
d91	Sets the number of daily defrosts (only if **d90** = 2)	0...255	num	0	0	0	0
d92	Sets the first weekend/holiday day. • **0** = Sunday • **1** = Monday • **2** = Tuesday • **3** = Wednesday • **4** = Thursday • **5** = Friday • **6** = Saturday • **7** = Disabled	0...7	num	0	0	0	0
d93	Sets the second weekend/holiday day. Same as **d92**.	0...7	num	0	0	0	0
d94	Sets the duration of the regular defrost in days	1...7	num	0	0	0	0
d1h	First weekday defrost start hour	0...23	hours	0	0	0	0
d1n	First weekday defrost start minute	0...59	min	0	0	0	0
F1h	First weekend/holiday defrost start hour	0...23	hours	0	0	0	0
F1n	First weekend/holiday defrost start minute	0...59	min	0	0	0	0
Fan							
FPt	Sets whether parameter **FSt** is expressed as an absolute temperature value or as a value relative to the Setpoint. **0** = absolute; **1** = relative.	0/1	flag	0.0	0.0	0.0	0.0
FSt	Fan disabling temperature; a value, read by the evaporator probe.	-67.0...320	°C/°F	2.0	2.0	2.0	2.0
FAd	Evaporator fan activation differential (parameter **FSt**).	1.0...25.0	°C/°F	2.0	2.0	2.0	2.0
Fdt	Fan activation delay time after a defrost.	0...250	min	0	0	0	0
dt	Dripping time.	0...250	min	5	5	5	5
dFd	Used to select or deselect the exclusion of the evaporator fans during defrosting. **n**(0) = no; **y** (1) = yes (fan excluded or off).	n/y	flag	y	y	y	y

<table>
<tr><th>Parameter</th><th>Description</th><th>Range</th><th>UM</th><th>Default</th><th>AP1</th><th>AP2</th><th>AP3</th></tr>
<tr><td>FCo</td><td>Evaporator fan operating mode.
<table>
<tr><th rowspan="2">Pb2</th><th rowspan="2">H42</th><th rowspan="2">FCo</th><th colspan="2">day</th><th colspan="2">night</th></tr>
<tr><th>Cn</th><th>Cf</th><th>Cn</th><th>Cf</th></tr>
<tr><td rowspan="4">ok</td><td rowspan="4">y</td><td>0</td><td>T</td><td>Off</td><td>T</td><td>Off</td></tr>
<tr><td>1</td><td>T</td><td>T</td><td>T</td><td>T</td></tr>
<tr><td>2</td><td>T</td><td>DCd</td><td>T</td><td>DCn</td></tr>
<tr><td>3</td><td>T</td><td>DCd</td><td>T</td><td>DCn</td></tr>
<tr><td rowspan="4">ko</td><td rowspan="4">y</td><td>0</td><td>On</td><td>Off</td><td>On</td><td>Off</td></tr>
<tr><td>1</td><td>On</td><td>On</td><td>On</td><td>On</td></tr>
<tr><td>2</td><td>On</td><td>DCd</td><td>On</td><td>DCn</td></tr>
<tr><td>3</td><td>On</td><td>DCd</td><td>On</td><td>DCn</td></tr>
<tr><td rowspan="4">no</td><td rowspan="4">n</td><td>0</td><td>On</td><td>Off</td><td>On</td><td>Off</td></tr>
<tr><td>1</td><td>On</td><td>On</td><td>On</td><td>On</td></tr>
<tr><td>2</td><td>On</td><td>DCd</td><td>On</td><td>DCn</td></tr>
<tr><td>3</td><td>On</td><td>DCd</td><td>On</td><td>DCn</td></tr>
</table>
Headings legend:
Pb2 = probe Pb2 status (ok = present; ko = in E2 error and no = absent; day = day mode; night = night mode; Cn = compressor on; Cf = compressor off.
Status legend:
T = thermostat controlled fans; On = fans on; Off= fans off; DCd = Day duty cycle or DCn = Night duty cycle.</td><td>0...3</td><td>num</td><td>1</td><td>1</td><td>1</td><td>1</td></tr>
<tr><td>Fon</td><td>Day duty cycle: time with fans on.</td><td>0...250</td><td>min</td><td>0</td><td>0</td><td>0</td><td>0</td></tr>
<tr><td>FoF</td><td>Day duty cycle: time with fans off.</td><td>0...250</td><td>min</td><td>0</td><td>0</td><td>0</td><td>0</td></tr>
<tr><td>Fnn</td><td>Night duty cycle: time with fans on.</td><td>0...250</td><td>min</td><td>0</td><td>0</td><td>0</td><td>0</td></tr>
<tr><td>FnF</td><td>Night duty cycle: time with fans off.</td><td>0...250</td><td>min</td><td>0</td><td>0</td><td>0</td><td>0</td></tr>
<tr><td>ESF</td><td>"Night" mode activation. n(0) = no; y(1) = yes.</td><td>n/y</td><td>flag</td><td>n</td><td>n</td><td>n</td><td>n</td></tr>
<tr><td colspan="8">AL (Alarms)</td></tr>
<tr><td>Att</td><td>Sets the absolute or relative value for parameters HAL and LAL.
0 = absolute value
1 = relative value</td><td>0/1</td><td>flag</td><td>0</td><td>0</td><td>0</td><td>0</td></tr>
<tr><td>AFd</td><td>Alarm differential.</td><td>0.1...25.0</td><td>°C/°F</td><td>2.0</td><td>2.0</td><td>2.0</td><td>2.0</td></tr>
<tr><td>HAL</td><td>Maximum temperature alarm.
Temperature value (in a relative value) which, when exceeded, will lead to the activation of alarm signaling.</td><td>LAL...302</td><td>°C/°F</td><td>150.0</td><td>150.0</td><td>150.0</td><td>150.0</td></tr>
<tr><td>LAL</td><td>Minimum temperature alarm.
Temperature value (in a relative value) which, when not reached, will lead to the activation of alarm signaling.</td><td>-67.0...HAL</td><td>°C/°F</td><td>-50.0</td><td>-50.0</td><td>-50.0</td><td>-50.0</td></tr>
<tr><td>PAo</td><td>Alarm exclusion time when switching on the controller, after a power failure.</td><td>0...10</td><td>hours</td><td>0</td><td>0</td><td>0</td><td>0</td></tr>
<tr><td>dAo</td><td>Temperature alarm exclusion time after defrosting.</td><td>0...250</td><td>min</td><td>0</td><td>0</td><td>0</td><td>0</td></tr>
<tr><td>oAo</td><td>Alarm signaling delay after deactivation of the digital input (door closure). Alarm refers to high and low temperature alarms.</td><td>0...10</td><td>hours</td><td>0</td><td>0</td><td>0</td><td>0</td></tr>
<tr><td>tdO</td><td>Door open alarm activation delay time.</td><td>0...250</td><td>min</td><td>0</td><td>0</td><td>0</td><td>0</td></tr>
<tr><td>tAo</td><td>Temperature alarm signaling delay time.</td><td>0...250</td><td>min</td><td>0</td><td>0</td><td>0</td><td>0</td></tr>
<tr><td>dAt</td><td>Defrost ended due to timeout alarm indication.
n(0) = does not activate alarm; y(1) = activates alarm.</td><td>n/y</td><td>flag</td><td>0</td><td>0</td><td>0</td><td>0</td></tr>
</table>

Parameter	Description	Range	UM	Default	AP1	AP2	AP3
EAL	An external alarm inhibits the regulators. **0** = regulators not inhibited; **1** = compressor and defrost inhibited; **2** = fans, compressor and defrost inhibited;	0/1/2	flag	n	n	n	n
AoP	Alarm output polarity. **0** = NO; **1** = NC.	0/1	flag	1	1	1	1
SA3	Probe 3 alarm setpoint.	-67.0...302	°C/°F	0.0	0.0	0.0	0.0
dA3	Probe 3 alarm differential.	0.1...30.0	°C/°F	1.0	1.0	1.0	1.0
rFt	Low refrigerant alarm signaling delay.	0...250	min	0 (not in applications)			
Lit (Lights and digital inputs)							
dOd	Digital input shuts off utilities: **0** = disabled; **1** = fans disabled; **2** = compressor disabled; **3** = fans and compressor disabled.	0...3	num	3	3	3	3
dAd	Digital input activation delay	0...250	min	0	0	0	0
dCO	Compressor activation delay from acknowledgment	0...250	min	0	0	1	0
AUP	Auxiliary (AUX) output activation when the door is opened.	n/y	flag	n	n	n	n
PrE (Pressure switch)							
Pen	Number of errors permitted per minimum/maximum pressure switch input	0...15	num	0	0	0	0
PEi	Minimum/maximum pressure switch error count interval	1...99	min	1	1	1	1
PEt	Compressor activation delay after pressure switch deactivation	0...255	min	0	0	0	0
EnS (Energy Saving)							
oSP	Temperature value to be added to the setpoint in the case of an enabled reduced set (Economy function)	-30.0...30.0	°C/°F	0.0	0.0	0.0	0.0
OdF	Differential offset during an energy saving cycle or reduced set	0.1...30.0	°C/°F	2.0	2.0	2.0	2.0
Add (Communication)							
Adr	Modbus protocol controller address.	1...247	flag	1 (not in applications)			
bAU	Modbus Baudrate selection. **96** (0) = 9600; **192** (1) = 19200; **384** (2) = 38400	96/192/384	num	96 (not in applications)			
Pty	Modbus parity bit. **n**(0) = none; **E**(1) = even; **o**(2) = odd.	n/E/o	num	E (not in applications)			
diS (Display)							
dro	Selects the unit of measure used when displaying the temperature read by the probes. (**0** = °C, **1** = °F). **Note**: changing from °C to °F or vice-versa does NOT change the **SEt**, **diF** values, etc. (example: **SEt** = 10°C becomes 10°F).	0/1	flag	0	0	0	0
CA1	Positive or negative temperature value to be added to the value of Pb1.	-30.0...30.0	°C/°F	0.0	0.0	0.0	0.0
CA2	Positive or negative temperature value to be added to the value of Pb2.	-30.0...30.0	°C/°F	0.0	0.0	0.0	0.0
CA3	Positive or negative temperature value to be added to the value of Pb3.	-30.0...30.0	°C/°F	0.0	0.0	0.0	0.0
CAi	Activation of the calibration value. **0** = Adds the value to the temperature value displayed; **1** = Adds the value to the temperature used by the regulators and not to the one displayed; **2** = Adds the value to the temperature used by the regulators and to the temperature displayed.	0/1/2	num	2	2	2	2

Parameter	Description	Range	UM	Default	AP1	AP2	AP3
LoC	Keypad lock. **n**(0) = Keypad lock disabled **y**(1) = Keypad lock enabled (On startup or when 30 seconds have passed since the last action carried out on the user interface).	n/y	flag	y	y	y	y
ddd	Selects the type of value to show on the display. **0** = setpoint; **1** = probe Pb1 ; **2** = probe Pb2 ; **3** = probe Pb3.	0...3	num	1	1	1	1
ddL	Display mode during defrosting. **0** = displays the temperature read by Pb1; **1** = inhibits reading on the value of Pb1 at the start of defrost and until the setpoint is reached; **2** = displays the label **dEF** during the defrost until the setpoint is reached.	0/1/2	num	0	0	0	0
Ldd	Display unlock timeout value - label **dEF**	0...250	min	30	30	30	30
ndt	Display with decimal point. **n**(0) = no; **y**(1) = yes.	n/y	flag	y	y	y	y
FSE	Sets the value (COEFF) used by the low-pass filter to calculate the temperature value to be displayed. **0** = deactivated; **1** = 200; **2** = 100; **3** = 50; **4** = 25; **5** = 12; **6** = 6; **7** = 3.	0...7	num	0	0	0	0
FdS	Filter disabling threshold.	-67.0...302	°C/°F	0	0	0	0
Ftt	Time that has passed beyond the value of **FdS** before the filter is disabled.	0...250	min	0	0	0	0
FHt	Filter sampling interval.	1...250	s	1	1	1	1
PS1	When enabled (**PS1**≠0) this is the access key for the user parameters.	0...250	num	0	0	0	0
PS2	When enabled (**PS2**≠0) this is the access key for the installer parameters.	0...250	num	15	15	15	15
CnF (Configuration)							
H00	Selects the probe type. **0** = PTC; **1** = NTC; **2** = Pt1000.	0/1/2	flag	1	1	1	1
H08	Stand-by operating mode. **0** = display off; the regulators are active and the device signals any alarms by reactivating the display; **1** = display off; the regulators and alarms are inhibited; **2** = the display shows the label “OFF”; the regulators and alarms are inhibited.	0/1/2	num	2	2	2	2
H11	Digital input 1/polarity configuration: **0** = disabled; **±1** = defrost; **±2** = reduced set; **±3** = auxiliary; **±4** = door switch; **±5** = external alarm; **±6** = stand-by; **±7** = pressure switch; **±8** = deep cooling (DCC); **±9** = light; **±10** = energy saving. **Note**: • the “+” sign indicates that the input is active if the contact is closed. • the “-” sign indicates that the input is active if the contact is open.	-10...+10	num	0	0	-4	-4
H21	Configuration of digital output 1 (**Out1**): **0** = disabled; **1** = compressor; **2** = defrost; **3** = evaporator fan; **4** = alarm; **5** = auxiliary; **6** = stand-by; **7** = light; **8** = buzzer; **9** = compressor 2; **10** = evaporator 2 defrost; **11** = condenser fans; **12** = heater deadband control; **13** = variable speed compressor (VSC).	0...13	num	13	13	13	13

Parameter	Description	Range	UM	Default	AP1	AP2	AP3
H22	Configuration of digital output 2 (**Out2**). Same as **H21**. **0** = disabled; **1** = compressor; **2** = defrost; **3** = evaporator fan; **4** = alarm; **5** = auxiliary; **6** = stand-by; **7** = light; **8** = buzzer; **9** = compressor 2; **10** = evaporator 2 defrost; **11** = condenser fans; **12** = heater deadband control.	0...12	num	2	2	2	2
H23	Configuration of digital output 3 (**Out3**). Same as **H22**.	0...12	num	4	4	7	7
H24	Configuration of digital output 4 (**Out4**). Same as **H22**.	0...12	num	3	3	3	3
H31	△ key configuration. **0** = disabled; **1** = defrost; **2** = auxiliary; **3** = reduced set; **4** = stand-by; **5** = autotuning procedure **nPL**; **6** = autotuning procedure **tun**; **7** = deep cooling (DCC); **8** = light.	0...8	num	1	1	1	1
H32	▽ key configuration. Same as **H31**.	0...8	num	0	0	0	0
H33	⏻ key configuration. Same as **H31**.	0...8	num	4	4	4	4
H34	💡 key configuration. Same as **H31**.	0...8	num	0	0	0	0
H35	☆ key configuration. Same as **H31**.	0...8	num	0	0	0	0
H42	Evaporator probe presence. **n**(0) = not present; **y**(1) = present.	n/y	flag	y	y	y	y
H43	Probe Pb3 present. **n**(0) = not present; **y**(1) = present; **2EP**(2) = second evaporator.	n/y/2EP	flag	n	n	n	n
H45	Defrost input mode for applications with dual evaporator. **0** = first evaporator only; **1** = if at least one of the evaporators is below its defrost end temperature; **2** = only if both evaporators are under the respective defrost end temperature; **3** = evaporator 1 and evaporator 2 alternately.	0...3	num	1	1	1	1
H48	RTC (Real Time Clock) present. **0** = no RTC; **1** = RTC present.	0/1	flag	1	1	1	1
H60	Display selected application. **0** = disabled; **1** = AP1; **2** = AP2; **3** = AP3.	0...3	num	1 (not in applications)			
tAb	Reserved: read-only parameter.	/	/	/	/	/	/
FPr (UNICARD)							
UL	Transfer of the programming parameters from the device to the UNICARD	/	/	/ (not in applications)			
Fr	UNICARD formatting. Deletes all data on the UNICARD. **Note**: the use of parameter **Fr** results in the loss of all data entered. This operation cannot be reversed.	/	/	/ (not in applications)			
FnC (Functions)							
rAP	Reset pressure switch alarms	/	/	/	/	/	/
nPL	Preliminary Autotuning procedure activation	/	/	/	/	/	/
tun	Autotuning activation	/	/	/	/	/	/
VSC (Variable-speed compressor)							
CEr	Controlled capacity value in the event of regulation probe error.	0.0...100	%	50.0	50.0	50.0	50.0
PdS	Differential for forced activation of a pull-down.	-50.0...50.0	K/°R	3.0	3.0	3.0	3.0
PUS	Differential for forced activation of a pull-up.	-50.0...50.0	K/°R	-3.0	-3.0	-3.0	-3.0

Parameter	Description	Range	UM	Default	AP1	AP2	AP3
PUd	Temperature outside range timeout. The timer is activated when the regulation probe reaches a value greater than **SEt+PdS** (for Pull Down) or less than **SEt+PuS** (for Pull Up). When the timer runs out, a Pull Down or Pull Up procedure will be started depending on the zone in which the probe is located. If the temperature recovers before the end of this timed period, the timer is reloaded.	0...1000	min	4	4	4	4
PdE	Pull-down end differential.	-50.0...50.0	K/°R	0.0	0.0	0.0	0.0
PUE	Pull-up end differential. If a pull-up is activated when the timer **PUd** runs out, the compressor is stopped until **SEt+PUE** is reached.	-50.0...50.0	K/°R	0.0	0.0	0.0	0.0
Pdt	Optimized pull-down timeout.	0...1000	min	10	10	10	10
Pdd	Controlled capacity value, if a pull-down is activated, when the time period **PUd** has elapsed, that will be maintained: • for a time period **Pdt** at the end of which the capacity will be forced to 100% until **SEt+PdE** is reached. • until the temperature **SEt+PdE** is reached (if the time < Pdt).	0.0...100	%	60.0	60.0	60.0	60.0
CPd	Controlled capacity after a pull-down in day operating mode.	0.0...100	%	60.0	60.0	60.0	60.0
CPn	Controlled capacity after a pull-down in night operating mode.	0.0...100	%	50.0	50.0	50.0	50.0
CPb	PID regulator proportional band.	0.1...3200	K/°R	3.0	3.0	3.0	3.0
Cti	PID integral time.	0...65535	s	60	60	60	60
Ctd	PID derivative time.	0...65535	s	0	0	0	0
CSd	Duration of constant-speed compressor heating (set by **CSC**) on startup or after a stand-by.	0...900	s	120	120	120	120
CSC	Fixed compressor capacity for a time period equal to **CSd** on startup or after a stand-by.	44.4...100	%	80.0	80.0	80.0	80.0
CAU	Selects automatic or manual PID mode. **0** = automatic; **1** = manual.	0/1	flag	0	0	0	0
CdU	PID duty cycle in manual mode. If **CAU** = **AUt**, **CdU** will function as a maximum controlled capacity limiter (%). If **CAU** = **FiH**, **CdU** will force controlled capacity of the compressor (%).	0.0...100	%	100	100	100	100
F_1	Maximum compressor operating frequency.	0.0...250	Hz	150	150	150	150
F_2	Minimum compressor operating frequency.	0.0...250	Hz	67.0	67.0	67.0	67.0
nAd (night and day)							
E10	Selects Event 1 activation mode. **0** = disabled; **1** = Monday; **2** = Tuesday; **3** = Wednesday; **4** = Thursday; **5** = Friday; **6** = Saturday; **7** = Sunday; **8** = Monday to Friday; **9** = Monday to Saturday; **10** = Saturday and Sunday; **11** = every day.	0...11	num	0 (not in applications)			
E11	Event 1 start hour.	0...23	hours	0 (not in applications)			
E12	Event 1 start minute.	0...59	min	0 (not in applications)			
E13	Event 1 end hour.	0...23	hours	0 (not in applications)			
E14	Event 1 end minute.	0...59	min	0 (not in applications)			
E15	Sets Event 1 type. **0** = Energy Saving; **1** = AUX deactivated; **2** = AUX activated; **3** = Stand-by; **4** = Light on; **5** = Light off.	0...5	num	0 (not in applications)			
E20	Selects Event 2 activation mode. Same as **E10**.	0...11	num	0 (not in applications)			
E21	Event 2 start hour.	0...23	hours	0 (not in applications)			
E22	Event 2 start minute.	0...59	min	0 (not in applications)			

Parameter	Description	Range	UM	Default	AP1	AP2	AP3
E23	Event 2 end hour.	0...23	hours	0 (not in applications)			
E24	Event 2 end minute.	0...59	min	0 (not in applications)			
E25	Sets Event 2 type. Same as **E15**.	0...5	num	0 (not in applications)			

Note: if one or more parameters in folder **CnF** or marked with **(!)** are changed, the controller must be switched off and then on again to make sure it works properly.

Modbus MSK 750 functions and resources

Contents

This section includes the following topics:

Setting parameters via Modbus 181
Modbus table content 182
Table of Modbus Parameters 184
Visibility table for folders relating to applications 203
Table of Modbus Resources 205

Setting parameters via Modbus

Introduction

Modbus is a client/server protocol for communication between devices connected in a network. Modbus devices communicate using a master-slave technique in which only one device (master) can send messages. The other devices in the network (slave) respond, returning the data requested by the master or executing the action contained in the message sent. A slave is a device connected to a network that processes information and sends the results to the master using the Modbus protocol.

The master device can send messages to individual slaves, or to the entire network (broadcast), whilst slave devices can only respond to messages individually and to the master device. The Modbus standard used by Eliwell employs the RTU code for data transmission.

Data format (RTU)

The coding type used defines the structure of messages transmitted on the network and the way in which this information is deciphered. The coding type is usually chosen according to specific parameters (baudrate, parity, stop), plus certain devices only support specific coding types. Use the same coding type for all devices connected to a Modbus network.

The protocol uses the RTU binary method with the serial frame configured as follows:

- 8 bits for data
- parity bits NONE (configurable)
- 2 stop BITS

Parameters can be changed via:

- Device keypad
- UNICARD / DMI
- Send data via Modbus protocol directly to an individual device or in a broadcast using the address 0 (broadcast)

Modbus commands available and data areas

The following commands are implemented:

Modbus command	Description
03 (hex 0x03)	Read resources
16 (hex 0x10)	Write resources
43 (hex 0x2B)	Read device ID. The following 3 fields can be read: • 0 = Manufacturer ID • 1 = Model ID • 2 = Family ID (MSK 750) / device version

Note: Maximum length of transmitted/received messages equal to 50 bytes.

Address configuration

The **TTL** serial port may be used to configure the device, parameters, statuses, variables with Modbus using the Modbus protocol.

The address of a device within a Modbus message is set via parameter **Adr**.

The address **0** is used for broadcast messages that all slaves recognize. Slaves do not respond to a broadcast type request.

The device configuration parameters are as follows:

Parameter	Description
Adr	Modbus protocol controller address
bAU	Baudrate selection
Pty	Sets the Modbus protocol parity BIT and the number of stop BITs: • **n** = NONE parity bit + 2 stop BITS • **E** = EVEN parity bit + 1 stop BIT • **o** = ODD parity bit + 1 stop BIT

Note: Switch the controller off and on again after changing **Pty**.

Parameter values and visibility

Below are several notes relating to the value and visibility of the parameters.

Notes:

- Unless otherwise indicated, the parameter should be considered as visible and able to be changed unless the user applies custom settings via the serial port.
- If the visibility of the folder is changed all the parameters in that folder will assume the new setting.

Modbus table content

Introduction

The tables below contain the information required to access the resources properly.

There are 3 tables:

- **Modbus Parameters Table**: contains all the device configuration parameters including visibility
- **Folder Visibility Table**: contains the visibility of the folders containing the parameters
- **Modbus Resource Table**: contains all status (I/O) and alarm resources available in the volatile memory of the device.

Description of the columns

FOLDER
Indicates the name of the folder containing the parameter in question.

LABEL
Indicates the name with which the parameter appears in the menu.

DESCRIPTION
Description of the parameter's meaning.

PAR. ADDRESS VAL.
Represents the Modbus register address which contains the read or write value of the resource in the device.

FILTER VAL.
Represents the position of the most significant data bit inside the register. This information is always provided when the register contains more than one piece of information and it is necessary to distinguish which bits actually represent the data (the useful size of the data, indicated in the DATA SIZE column, should also be taken into account).

PAR. ADDRESS VIS.
Contains the Modbus register address which contains the visibility value of the resource to read or write in the device.

FILTER VIS.

Mask representing the position of the data inside the register (it has BITs set to 1 in correspondence with the register BITs effectively associated with the resource). It assumes values from 0 to 65535.

Note: in binary representation the least significant is furthest to the right.

Visibility:

- Value **3** = parameter or folder always visible
- Value **2** = manufacturer level; these parameters and folders are only visible when the manufacturer password (**PS2**) is entered (with this password you will be able to see all parameters declared as always visible; level **1** parameters will not be visible)
- Value **1** = installer level; these parameters and folders are only visible when the installer password (**PS1**) is entered (with this password you will be able to see all parameters declared as always visible; level **2** parameters will not be visible)
- Value **0** = parameter or folder NOT visible

Note: the size of the piece of visibility data is 2 BIT.

R/W
Indicates the option of reading or writing the resource:

- R = the resource is read-only
- W = the resource is write-only
- R/W = the resource can be both read and written

DATA SIZE
Indicates the size of the piece of data (in bit):

- WORD = 16 bit
- Byte = 8 bit
- “n” bit = 0...15 bit based on the value of “n”

CPL
When the field indicates **Y**, the value read by the register needs to be converted because the value represents a number with a sign. In the other cases the value is always positive or null.

To convert it, proceed as follows:

If the register value falls between...	Then the result is...
0 and 32767	the same value (zero and positive values).
32768 and 65535	the register value, from which to subtract 65536 (negative values).

RANGE
Describes the interval of values that can be assigned to the parameter. This range can be correlated to the value of other parameters.

MU
Unit of measure for the values.

Table of Modbus Parameters

Folders	Label	Description	Par. Address Val.	Filter Val.	Par. Address Vis.	Filter Vis.	R/W	Data Size	CPL	Range	UM
-	**SEt**	Regulation setpoint	32769	0	32935	49152	R/W	Word	Y	**LSE**...**HSE**	°C/°F
CP	**diF**	Activation differential	32770	0	32932	768	R/W	Word	-	0.1...30.0	°C/°F
CP	**LSE**	Minimum setpoint value that can be set	32771	0	32932	3072	R/W	Word	Y	-67.0...**HSE**	°C/°F
CP	**HSE**	Maximum setpoint value that can be set	32773	0	32932	12288	R/W	Word	Y	**LSE**...302	°C/°F
CP	**HC**	Operating mode (Heating/Cooling)	32980	256	32932	49152	R/W	Byte	-	0/1	flag
CP	**ont**	Compressor output ON time if probe Pb1 is in error	32768	0	32933	3	R/W	Byte	-	0...250	min
CP	**oFt**	Compressor output OFF time if probe Pb1 is in error	32772	0	32933	12	R/W	Byte	-	0...250	min
CP	**don**	Compressor output activation delay from call	32776	0	32933	48	R/W	Byte	-	0...250	s
CP	**doF**	Compressor output activation delay from switch-off	32780	0	32933	192	R/W	Byte	-	0...250	min
CP	**dbi**	Delay between two consecutive compressor output power-ons	32784	0	32933	768	R/W	Byte	-	0...250	min
CP	**Cit**	Minimum compressor output activation time	32800	0	32934	3	R/W	Byte	-	0...250	min
CP	**CAt**	Maximum compressor output activation time	32804	0	32934	12	R/W	Byte	-	0...250	min
CP	**odo**	Output activation delay at startup	32788	0	32933	3072	R/W	Byte	-	0...250	min
CP	**dCS**	Deep cooling setpoint	32834	0	32951	768	R/W	Word	Y	-67.0...302	°C/°F
CP	**tdC**	Deep cooling duration	32886	0	32952	12288	R/W	Byte	-	0...250	min
CP	**dcc**	Defrost delay after deep cooling	32883	0	32952	3072	R/W	Byte	-	0...250	min
CP	**CP2**	Compressor 2 activation delay	32887	255	32952	49152	R/W	Byte	-	0...250	min
CP	**dFA**	Condenser fan and compressor activation delay from the call	32895	0	32934	3072	R/W	Byte	-	0...250	s
dEF	**dtY**	Type of defrost	32912	61440	32934	768	R/W	Byte	-	0/1/2	num
dEF	**doH**	Defrost cycle activation delay from the call	32820	0	32935	3	R/W	Byte	-	0...250	min
dEF	**dEt**	Defrost timeout. Determines the maximum duration of the defrost.	32816	0	32934	12288	R/W	Byte	-	1...250	min
dEF	**dS1**	Evaporator 1 defrost end temperature	32774	0	32935	12	R/W	Word	Y	-67.0...302	°C/°F
dEF	**dS2**	Evaporator 2 defrost end temperature	32775	0	32935	48	R/W	Word	Y	-67.0...302	°C/°F
dEF	**dt2**	Unit of measure for defrost duration	32929	192	32934	49152	R/W	Byte	-	0/1/2	num
dEF	**dPo**	Defrost activation request at startup, if the temperature measured by Pb2 allows.	32980	1024	32935	768	R/W	Byte	-	0/1	flag
dEF	**tCd**	Compressor output activation/deactivation time before a defrost	32796	0	32933	49152	R/W	Byte	-	0...250	min
dEF	**Cod**	Compressor OFF time before defrost	32792	0	32933	12288	R/W	Byte	-	0...250	min
dEF	**dMr**	Enable defrost timer reset with manual defrost	32981	2048	32965	12	R/W	Byte	-	0/1	flag
dEF	**d00**	Cumulative time for defrost activation	32889	0	32953	12	R/W	Byte	-	0...250	hours
dEF	**d01**	Parameter d00 unit of measure	32929	12	32955	12	R/W	Byte	-	0/1/2	num

Folders	Label	Description	Par. Address Val.	Filter Val.	Par. Address Vis.	Filter Vis.	R/W	Data Size	CPL	Range	UM
dEF	**dit**	Device time for defrost activation	32812	0	32953	49152	R/W	Byte	-	0...250	hours
dEF	**d11**	Parameter dit unit of measure	32929	48	32955	48	R/W	Byte	-	0/1/2	num
dEF	**d20**	Enable defrost at compressor stop	32981	256	32955	768	R/W	Byte	-	0/1	flag
dEF	**d40**	Select defrost probe 1	32917	240	32954	3	R/W	Byte	-	0/1	flag
dEF	**d41**	Temperature threshold for starting defrost	32837	0	32951	49152	R/W	Word	Y	-67.0...302	°C/°F
dEF	**d42**	Time the evaporator temperature must remain below the threshold	32839	0	32951	12288	R/W	Byte	-	0...250	min
dEF	**d43**	Time count mode for temperature below threshold	32917	3840	32954	12	R/W	Byte	-	0...3	num
dEF	**d44**	Threshold management mode	32917	61440	32954	48	R/W	Byte	-	0/1	flag
dEF	**d90**	Clock defrost mode	32918	3840	32954	3072	R/W	Byte	-	0...3	num
dEF	**d91**	Number of daily defrosts	32890	255	32953	48	R/W	Byte	-	0...255	num
dEF	**d92**	1st weekend/holiday day	32918	15	32954	192	R/W	Byte	-	0...7	num
dEF	**d93**	2nd weekend/holiday day	32918	240	32954	768	R/W	Byte	-	0...7	num
dEF	**d94**	Regular defrost interval duration	32918	61440	32954	12288	R/W	Byte	-	1...7	num
dEF	**d1H**	Weekday defrost no. 1 start hour	32890	0	32953	192	R/W	Byte	-	0...23	hours
dEF	**d1n**	Weekday defrost no. 1 start minute	32891	255	32953	768	R/W	Byte	-	0...59	min
dEF	**F1H**	Weekend/holiday defrost no. 1 start hour	32891	0	32953	3072	R/W	Byte	-	0...23	hours
dEF	**F1n**	Weekend/holiday defrost no. 1 start minute	32892	0	32953	12288	R/W	Byte	-	0...59	min
FAn	**FPt**	FSt parameter mode (absolute or relative)	32980	4096	32937	3	R/W	Byte	-	0/1	flag
FAn	**FSt**	Evaporator fan disabling temperature	32778	0	32937	12	R/W	Word	Y	-67.0...302	°C/°F
FAn	**FAd**	Evaporator fan trigger differential	32869	0	32937	48	R/W	Word	-	1.0...25.0	°C/°F
FAn	**Fdt**	Evaporator fan activation delay time after a defrost cycle	32832	0	32951	48	R/W	Byte	-	0...250	min
FAn	**dt**	Dripping time	32870	255	32937	192	R/W	Byte	-	0...250	min
FAn	**dFd**	Evaporator fan cut-out during defrost	32980	8192	32937	768	R/W	Byte	-	0/1	flag
FAn	**FCO**	Evaporator fan status with compressor output OFF	32913	15	32936	49152	R/W	Byte	-	0...3	num
FAn	**Fon**	Evaporator fan ON time in cyclical regulator mode	32871	255	32937	12288	R/W	Byte	-	0...250	min
FAn	**FoF**	Evaporator fan OFF time in cyclical regulator mode	32871	0	32937	49152	R/W	Byte	-	0...250	min
FAn	**Fnn**	Evaporator fan ON time in night duty cycle mode	32868	0	32936	3072	R/W	Byte	-	0...250	num
FAn	**FnF**	Evaporator fan OFF time in night duty cycle mode	32869	255	32936	12288	R/W	Byte	-	0...250	num
FAn	**ESF**	Night mode activation	32981	512	32955	3072	R/W	Byte	-	0/1	flag
AL	**Att**	**HAL** and **LAL** parameter mode (absolute or relative)	32980	32768	32938	12	R/W	Byte	-	0/1	flag

Folders	Label	Description	Par. Address Val.	Filter Val.	Par. Address Vis.	Filter Vis.	R/W	Data Size	CPL	Range	UM
AL	**AFd**	Alarm activation differential	32872	0	32938	48	R/W	Word	-	0.1...25.0	°C/°F
AL	**HAL**	Maximum alarm threshold	32779	0	32938	192	R/W	Word	Y	**LAL**...302	°C/°F
AL	**LAL**	Minimum alarm threshold	32781	0	32938	768	R/W	Word	Y	-67.0...**HAL**	°C/°F
AL	**PAo**	Alarm exclusion at startup	32873	255	32938	3072	R/W	Byte	-	0...10	hours
AL	**dAo**	Exclusion time for temperature alarms after a defrost cycle	32873	0	32938	12288	R/W	Word	-	0...250	min
AL	**oAo**	High and low temperature alarms exclusion time after closing the door	32874	255	32938	49152	R/W	Byte	-	0...10	hours
AL	**tdo**	Door open alarm exclusion time	32875	255	32939	49152	R/W	Byte	-	0...250	min
AL	**tAo**	Temperature alarm signaling delay time	32874	0	32939	3	R/W	Byte	-	0...250	min
AL	**dAt**	Defrost ended due to timeout alarm signaling	32782	0	32939	12	R/W	Byte	-	0/1	flag
AL	**EAL**	External alarm inhibits the regulators	32919	3840	32939	48	R/W	Byte	-	0/1/2	num
AL	**AoP**	Alarm output polarity	32981	1	32939	768	R/W			0/1	flag
AL	**SA3**	Alarm setpoint for probe 3	32831	0	32951	12	R/W	Word	Y	-67.0...302	°C/°F
AL	**dA3**	Probe 3 alarm tripping differential	32833	0	32951	192	R/W	Word	-	0.1...30.0	°C/°F
AL	**rFt**	Refrigerant level alarm bypass	33051	0	32985	12288	R/W	Byte	-	0...250	min
Lit	**dOd**	Enable utility shutoff upon door switch activation	32913	3840	32939	12288	R/W	Byte	-	0...3	num
Lit	**dAd**	Digital input activation delay	32882	255	32944	3072	R/W	Byte	-	0...250	min
Lit	**dCO**	Compressor deactivation delay from door opening	32840	0	32935	3072	R/W	Byte	-	0...250	min
Lit	**AUP**	Associate aux relay with door switch	32913	240	32939	192	R/W	Byte	-	0/1	flag
PrE	**PEn**	Number of activations permitted per minimum/maximum pressure switch input	32894	255	32950	12288	R/W	Byte	-	0...15	num
PrE	**PEi**	Minimum/maximum pressure switch error calculation interval	32894	0	32950	49152	R/W	Byte	-	1...99	min
PrE	**PEt**	Compressor activation delay after pressure switch deactivation	32895	255	32951	3	R/W	Byte	-	0...255	min
EnS	**oSP**	Offset on setpoint	32783	0	32940	49152	R/W	Word	Y	-30.0...30.0	°C/°F
EnS	**odF**	Trigger differential correction	32785	0	32941	48	R/W	Word	-	0.1...30.0	°C/°F
Add	**Adr**	Modbus protocol controller address	33048	0	32984	768	R/W	Byte	-	0...247	num
Add	**bAU**	Baudrate selection	33051	255	32984	3072	R/W	Byte	-	0/1/2	num
Add	**PtY**	Modbus parity bit	33049	255	32984	12288	R/W	Byte	-	0/1/2	num
diS	**dro**	Select °C / °F	32981	8	32941	192	R/W	Byte	-	0/1	flag
diS	**CA1**	Probe Pb1 calibration	32786	0	32941	768	R/W	Word	Y	-30.0...30.0	°C/°F
diS	**CA2**	Probe Pb2 calibration	32787	0	32941	3072	R/W	Word	Y	-30.0...30.0	°C/°F
diS	**CA3**	Probe Pb3 calibration	32789	0	32941	12288	R/W	Word	Y	-30.0...30.0	°C/°F
diS	**CAi**	Calibration trigger	32928	49152	32941	49152	R/W	Byte	-	0/1/2	num
diS	**LoC**	Enable keypad lock	32981	16	32942	48	R/W	Byte	-	0/1	flag
diS	**ddd**	Select main display value	32913	61440	32942	192	R/W	Byte	-	0...3	num

Folders	Label	Description	Par. Address Val.	Filter Val.	Par. Address Vis.	Filter Vis.	R/W	Data Size	CPL	Range	UM
diS	**ddL**	Inhibit resources at the end of defrost	32914	15	32942	768	R/W	Byte	-	0/1/2	num
diS	**Ldd**	Display lock timeout from end of defrost	32878	255	32942	3072	R/W	Byte	-	0...250	min
diS	**ndt**	Display with decimal point	32981	32	32942	12288	R/W	Byte	-	0/1	flag
diS	**FSE**	Select display filter	32914	240	32942	49152	R/W	Byte	-	0...7	num
diS	**FdS**	Filter disabling threshold	32793	0	32943	3	R/W	Word	Y	-67.0...302	°C/°F
diS	**Ftt**	Time spent above the filter disabling threshold	32878	0	32943	12	R/W	Byte	-	0...250	min
diS	**FHt**	Sampling interval for filtering	32879	255	32943	48	R/W	Byte	-	1...250	s
diS	**PS1**	Password 1 value	32879	0	32943	192	R	Byte	-	0...250	num
diS	**PS2**	Password 2 value	32880	0	32943	768	R	Byte	-	0...250	num
CnF	**H00**	Select analog input type NTC/PTC/Pt1000	32914	3840	32943	3072	R/W	Byte	-	0/1/2	num
CnF	**H08**	Stand-by operating mode	32929	3	32943	12288	R/W	Byte	-	0/1/2	num
CnF	**H11**	Digital input 1 configuration and polarity	32881	255	32943	49152	R/W	Word	Y	-10...10	num
CnF	**H21**	Digital output 1 configuration	32884	0	32944	12288	R/W	Byte	-	0...13	num
CnF	**H22**	Digital output 2 configuration	32885	255	32944	49152	R/W	Byte	-	0...12	num
CnF	**H23**	Digital output 3 configuration	32885	0	32945	3	R/W	Byte	-	0...12	num
CnF	**H24**	Digital output 4 configuration	32886	255	32945	12	R/W	Byte	-	0...12	num
CnF	**H25**	Digital output 5 (buzzer) configuration	32897	255	32935	12288	R/W	Byte	-	0/1	num
CnF	**H31**	Key configuration ∧	32914	61440	32945	48	R/W	Byte	-	0...8	num
CnF	**H32**	Key configuration ∨	32915	15	32945	192	R/W	Byte	-	0...8	num
CnF	**H33**	Key configuration ⏻	32915	240	32945	768	R/W	Byte	-	0...8	num
CnF	**H34**	Key configuration 💡	32915	3840	32945	3072	R/W	Byte	-	0...8	num
CnF	**H35**	Key configuration ☆	32915	61440	32945	12288	R/W	Byte	-	0...8	num
CnF	**H42**	Evaporator probe present	32916	61440	32946	3	R/W	Byte	-	0/1	flag
CnF	**H43**	Probe Pb3 present	32917	15	32946	12	R/W	Byte	-	0/1/2	num
CnF	**H45**	Defrost input mode for applications with dual evaporator	32919	15	32954	49152	R/W	Byte	-	0...3	num
CnF	**H48**	RTC present	32981	64	32946	48	R/W	Byte	-	0/1	flag
CnF	**H60**	Parameter vector selector	33043	0	32987	192	R	Byte	-	0...3	num
CnF	**tAb**	Parameter table visibility	32997	0	32985	12	R	Byte	-	0...999	num
FPr	**UL**	Visibility of the function transferring the programming parameters from the controller to the CopyCard	-	-	32985	48	R/W	2 bit	-	0...3	num
FPr	**Fr**	CopyCard formatting function visibility	-	-	32985	768	R/W	2 bit	-	0...3	num
FnC	**rAP**	Pressure switch alarm reset visibility	-	-	32985	3072	R/W	2 bit	-	0...3	num
VSC	**CEr**	Probe error capacity	32795	0	32946	768	R/W	Byte	-	0...100	%
VSC	**PdS**	Pull Down forced startup differential	32797	0	32946	3072	R/W	Word	Y	-50.0...50.0	K/°R
VSC	**PUS**	Pull Up forced startup differential	32798	0	32946	12288	R/W	Word	Y	-50.0...50.0	K/°R

Folders	Label	Description	Par. Address Val.	Filter Val.	Par. Address Vis.	Filter Vis.	R/W	Data Size	CPL	Range	UM
VSC	**PUd**	Temperature outside range timeout	32799	0	32946	49152	R/W	Byte	-	0...1000	min
VSC	**PdE**	Pull Down end differential	32801	0	32947	3	R/W	Word	Y	-50.0...50.0	K/°R
VSC	**PUE**	Pull Up end differential	32802	0	32947	12	R/W	Word	Y	-50.0...50.0	K/°R
VSC	**Pdt**	Optimized Pull Down timeout	32803	0	32947	48	R/W	Byte	-	0...1000	min
VSC	**Pdd**	Optimized Pull Down capacity	32805	0	32947	192	R/W	Byte	-	0...100	%
VSC	**CPd**	Capacity after Pull Down day	32806	0	32947	768	R/W	Byte	-	0...100	%
VSC	**CPn**	Capacity after Pull Down night	32807	0	32947	3072	R/W	Byte	-	0...100	%
VSC	**CPb**	Compressor PID proportional band	32810	0	32947	49152	R/W	Word	Y	0.1...3200	K/°R
VSC	**Cti**	Compressor PID integral time	32811	0	32948	768	R/W	Word	-	0...65535	s
VSC	**Ctd**	Compressor PID derivative time	32813	0	32948	3072	R/W	Word	-	0...65535	s
VSC	**CSd**	Compressor startup duration	32814	0	32948	12288	R/W	Word	-	0...900	s
VSC	**CSC**	Capacity during compressor startup	32815	0	32948	49152	R/W	Word	-	44.4...100	%
VSC	**CAU**	Select PID automatic or manual mode	32882	0	32949	12	R/W	Byte	-	0/1	flag
VSC	**CdU**	PID duty cycle in manual mode	32818	0	32949	48	R/W	Byte	-	0...100	num
VSC	**F_1**	Maximum frequency	32827	0	32950	192	R/W	Byte	-	0...250	Hz
VSC	**F_2**	Minimum frequency	32829	0	32950	768	R/W	Byte	-	0...250	Hz
nAd	**E10**	Event 1 profile	33040	0	32985	49152	R/W	Byte	-	0...11	num
nAd	**E11**	Event 1 start hour	33041	0	32986	3	R/W	Byte	-	0...23	hours
nAd	**E12**	Event 1 start minute	33042	255	32986	12	R/W	Byte	-	0...59	min
nAd	**E13**	Event 1 end hour	33042	0	32986	48	R/W	Byte	-	0...23	hours
nAd	**E14**	Event 1 end minute	33043	255	32986	192	R/W	Byte	-	0...59	min
nAd	**E15**	Enable functions during event 1	33041	255	32986	768	R/W	Byte	-	0...5	num
nAd	**E20**	Event 2 profile	33044	0	32986	3072	R/W	Byte	-	0...11	num
nAd	**E21**	Event 2 start hour	33045	0	32986	12288	R/W	Byte	-	0...23	hours
nAd	**E22**	Event 2 start minute	33046	255	32986	49152	R/W	Byte	-	0...59	min
nAd	**E23**	Event 2 end hour	33046	0	32987	3	R/W	Byte	-	0...23	hours
nAd	**E24**	Event 2 end minute	33047	255	32987	12	R/W	Byte	-	0...59	min
nAd	**E25**	Enable functions during event 2	33045	255	32987	48	R/W	Byte	-	0...5	num
Application 1 parameters											
V1	**V1-SEt**	Regulation setpoint	33061	0	33227	49152	R/W	Word	Y	**LSE**...**HSE**	°C/°F
V1	**V1-diF**	Activation differential	33062	0	33224	768	R/W	Word	-	0.1...30.0	°C/°F
V1	**V1-LSE**	Minimum setpoint value that can be set	33063	0	33224	3072	R/W	Word	Y	-67.0...**HSE**	°C/°F

Folders	Label	Description	Par. Address Val.	Filter Val.	Par. Address Vis.	Filter Vis.	R/W	Data Size	CPL	Range	UM
V1	**V1-HSE**	Maximum setpoint value that can be set	33065	0	33224	12288	R/W	Word	Y	**LSE**...302	°C/°F
V1	**V1-HC**	Operating mode (Heating/Cooling)	33272	256	33224	49152	R/W	Byte	-	0/1	flag
V1	**V1-ont**	Compressor output ON time if probe Pb1 is in error	33060	0	33225	3	R/W	Byte	-	0...250	min
V1	**V1-oFt**	Compressor output OFF time if probe Pb1 is in error	33064	0	33225	12	R/W	Byte	-	0...250	min
V1	**V1-don**	Compressor output activation delay from call	33068	0	33225	48	R/W	Byte	-	0...250	s
V1	**V1-doF**	Compressor output activation delay from switch-off	33072	0	33225	192	R/W	Byte	-	0...250	min
V1	**V1-dbi**	Delay between two consecutive compressor output power-ons	33076	0	33225	768	R/W	Byte	-	0...250	min
V1	**V1-Cit**	Minimum compressor output activation time	33092	0	33226	3	R/W	Byte	-	0...250	min
V1	**V1-CAt**	Maximum compressor output activation time	33096	0	33226	12	R/W	Byte	-	0...250	min
V1	**V1-odo**	Output activation delay at startup	33080	0	33225	3072	R/W	Byte	-	0...250	min
V1	**V1-dCS**	Deep cooling setpoint	33126	0	33243	768	R/W	Word	Y	-67.0...302	°C/°F
V1	**V1-tdC**	Deep cooling duration	33178	0	33244	12288	R/W	Byte	-	0...250	min
V1	**V1-dcc**	Defrost delay after deep cooling	33175	0	33244	3072	R/W	Byte	-	0...250	min
V1	**V1-CP2**	Compressor 2 activation delay	33179	255	33244	49152	R/W	Byte	-	0...250	min
V1	**V1-dFA**	Condenser fan and compressor activation delay from the call	33187	0	33226	3072	R/W	Byte	-	0...250	s
V1	**V1-dtY**	Type of defrost	33204	61440	33226	768	R/W	Byte	-	0/1/2	num
V1	**V1-doH**	Defrost cycle activation delay from the call	33112	0	33227	3	R/W	Byte	-	0...250	min
V1	**V1-dEt**	Defrost timeout. Determines the maximum duration of the defrost.	33108	0	33226	12288	R/W	Byte	-	1...250	min
V1	**V1-dS1**	Evaporator 1 defrost end temperature	33066	0	33227	12	R/W	Word	Y	-67.0...302	°C/°F
V1	**V1-dS2**	Evaporator 2 defrost end temperature	33067	0	33227	48	R/W	Word	Y	-67.0...302	°C/°F
V1	**V1-dt2**	Unit of measure for defrost duration	33221	192	33226	49152	R/W	Byte	-	0/1/2	num
V1	**V1-dPo**	Defrost activation request at startup, if the temperature measured by Pb2 allows.	33272	1024	33227	768	R/W	Byte	-	0/1	flag
V1	**V1-tCd**	Compressor output activation/deactivation time before a defrost	33088	0	33225	49152	R/W	Byte	-	0...250	min
V1	**V1-Cod**	Compressor OFF time before defrost	33084	0	33225	12288	R/W	Byte	-	0...250	min
V1	**V1-dMr**	Enable defrost timer reset with manual defrost	33273	2048	33257	12	R/W	Byte	-	0/1	flag
V1	**V1-d00**	Cumulative time for defrost activation	33181	0	33245	12	R/W	Byte	-	0...250	hours
V1	**V1-d01**	Parameter d00 unit of measure	33221	12	33247	12	R/W	Byte	-	0/1/2	num
V1	**V1-dit**	Device time for defrost activation	33104	0	33245	49152	R/W	Byte	-	0...250	hours

Folders	Label	Description	Par. Address Val.	Filter Val.	Par. Address Vis.	Filter Vis.	R/W	Data Size	CPL	Range	UM
V1	**V1-d11**	Parameter dit unit of measure	33221	48	33247	48	R/W	Byte	-	0/1/2	num
V1	**V1-d20**	Enable defrost at compressor stop	33273	256	33247	768	R/W	Byte	-	0/1	flag
V1	**V1-d40**	Select defrost probe 1	33209	240	33246	3	R/W	Byte	-	0/1	flag
V1	**V1-d41**	Temperature threshold for starting defrost	33129	0	33243	49152	R/W	Word	Y	-67.0...302	°C/°F
V1	**V1-d42**	Time the evaporator temperature must remain below the threshold	33131	0	33243	12288	R/W	Byte	-	0...250	min
V1	**V1-d43**	Time count mode for temperature below threshold	33209	3840	33246	12	R/W	Byte	-	0...3	num
V1	**V1-d44**	Threshold management mode	33209	61440	33246	48	R/W	Byte	-	0/1	flag
V1	**V1-d90**	Clock defrost mode	33210	3840	33246	3072	R/W	Byte	-	0...3	num
V1	**V1-d91**	Number of daily defrosts	33182	255	33245	48	R/W	Byte	-	0...255	num
V1	**V1-d92**	1st weekend/holiday day	33210	15	33246	192	R/W	Byte	-	0...7	num
V1	**V1-d93**	2nd weekend/holiday day	33210	240	33246	768	R/W	Byte	-	0...7	num
V1	**V1-d94**	Regular defrost interval duration	33210	61440	33246	12288	R/W	Byte	-	1...7	num
V1	**V1-d1H**	Weekday defrost no. 1 start hour	33182	0	33245	192	R/W	Byte	-	0...23	hours
V1	**V1-d1n**	Weekday defrost no. 1 start minute	33183	255	33245	768	R/W	Byte	-	0...59	min
V1	**V1-F1H**	Weekend/holiday defrost no. 1 start hour	33183	0	33245	3072	R/W	Byte	-	0...23	hours
V1	**V1-F1n**	Weekend/holiday defrost no. 1 start minute	33184	0	33245	12288	R/W	Byte	-	0...59	min
V1	**V1-FPt**	FSt parameter mode (absolute or relative)	33272	4096	33229	3	R/W	Byte	-	0/1	flag
V1	**V1-FSt**	Evaporator fan disabling temperature	33070	0	33229	12	R/W	Word	Y	-67.0...302	°C/°F
V1	**V1-FAd**	Evaporator fan trigger differential	33161	0	33229	48	R/W	Word	-	1.0...25.0	°C/°F
V1	**V1-Fdt**	Evaporator fan activation delay time after a defrost cycle	33124	0	33243	48	R/W	Byte	-	0...250	min
V1	**V1-dt**	Dripping time	33162	255	33229	192	R/W	Byte	-	0...250	min
V1	**V1-dFd**	Evaporator fan cut-out during defrost	33272	8192	33229	768	R/W	Byte	-	0/1	flag
V1	**V1-FCO**	Evaporator fan status with compressor output OFF	33205	15	33228	49152	R/W	Byte	-	0...3	num
V1	**V1-Fon**	Evaporator fan ON time in cyclical regulator mode	33163	255	33229	12288	R/W	Byte	-	0...250	min
V1	**V1-FoF**	Evaporator fan OFF time in cyclical regulator mode	33163	0	33229	49152	R/W	Byte	-	0...250	min
V1	**V1-Fnn**	Evaporator fan ON time in night duty cycle mode	33160	0	33228	3072	R/W	Byte	-	0...250	num
V1	**V1-FnF**	Evaporator fan OFF time in night duty cycle mode	33161	255	33228	12288	R/W	Byte	-	0...250	num

Folders	Label	Description	Par. Address Val.	Filter Val.	Par. Address Vis.	Filter Vis.	R/W	Data Size	CPL	Range	UM
V1	**V1-ESF**	Night mode activation	33273	512	33247	3072	R/W	Byte	-	0/1	flag
V1	**V1-Att**	**HAL** and **LAL** parameter mode (absolute or relative)	33272	32768	33230	12	R/W	Byte	-	0/1	flag
V1	**V1-AFd**	Alarm activation differential	33164	0	33230	48	R/W	Word	-	0.1...25.0	°C/°F
V1	**V1-HAL**	Maximum alarm threshold	33071	0	33230	192	R/W	Word	Y	**LAL**...302	°C/°F
V1	**V1-LAL**	Minimum alarm threshold	33073	0	33230	768	R/W	Word	Y	-67.0...**HAL**	°C/°F
V1	**V1-PAo**	Alarm exclusion at startup	33165	255	33230	3072	R/W	Byte	-	0...10	hours
V1	**V1-dAo**	Exclusion time for temperature alarms after a defrost cycle	33165	0	33230	12288	R/W	Word	-	0...250	min
V1	**V1-oAo**	High and low temperature alarms exclusion time after closing the door	33166	255	33230	49152	R/W	Byte	-	0...10	hours
V1	**V1-tdo**	Door open alarm exclusion time	33167	255	33231	49152	R/W	Byte	-	0...250	min
V1	**V1-tAo**	Temperature alarm signaling delay time	33166	0	33231	3	R/W	Byte	-	0...250	min
V1	**V1-dAt**	Defrost ended due to timeout alarm signaling	33074	0	33231	12	R/W	Byte	-	0/1	flag
V1	**V1-EAL**	External alarm inhibits the regulators	33211	3840	33231	48	R/W	Byte	-	0/1/2	num
V1	**V1-AoP**	Alarm output polarity	33273	1	33231	768	R/W			0/1	flag
V1	**V1-SA3**	Alarm setpoint for probe 3	33123	0	33243	12	R/W	Word	Y	-67.0...302	°C/°F
V1	**V1-dA3**	Probe 3 alarm tripping differential	33125	0	33243	192	R/W	Word	-	0.1...30.0	°C/°F
V1	**V1-dOd**	Enable utility shutoff upon door switch activation	33205	3840	33231	12288	R/W	Byte	-	0...3	num
V1	**V1-dAd**	Digital input activation delay	33174	255	33236	3072	R/W	Byte	-	0...250	min
V1	**V1-dCO**	Compressor deactivation delay from door opening	33132	0	33227	3072	R/W	Byte	-	0...250	min
V1	**V1-AUP**	Associate aux relay with door switch	33205	240	33231	192	R/W	Byte	-	0/1	flag
V1	**V1-PEn**	Number of activations permitted per minimum/maximum pressure switch input	33186	255	33242	12288	R/W	Byte	-	0...15	num
V1	**V1-PEi**	Minimum/maximum pressure switch error calculation interval	33186	0	33242	49152	R/W	Byte	-	1...99	min
V1	**V1-PEt**	Compressor activation delay after pressure switch deactivation	33187	255	33243	3	R/W	Byte	-	0...255	min
V1	**V1-oSP**	Offset on setpoint	33075	0	33232	49152	R/W	Word	Y	-30.0...30.0	°C/°F
V1	**V1-odF**	Trigger differential correction	33077	0	33233	48	R/W	Word	-	0.1...30.0	°C/°F
V1	**V1-dro**	Select °C / °F	33273	8	33233	192	R/W	Byte	-	0/1	flag
V1	**V1-CA1**	Probe Pb1 calibration	33078	0	33233	768	R/W	Word	Y	-30.0...30.0	°C/°F
V1	**V1-CA2**	Probe Pb2 calibration	33079	0	33233	3072	R/W	Word	Y	-30.0...30.0	°C/°F
V1	**V1-CA3**	Probe Pb3 calibration	33081	0	33233	12288	R/W	Word	Y	-30.0...30.0	°C/°F

Folders	Label	Description	Par. Address Val.	Filter Val.	Par. Address Vis.	Filter Vis.	R/W	Data Size	CPL	Range	UM
V1	**V1-CAi**	Calibration trigger	33220	49152	33233	49152	R/W	Byte	-	0/1/2	num
V1	**V1-LoC**	Enable keypad lock	33273	16	33234	48	R/W	Byte	-	0/1	flag
V1	**V1-ddd**	Select main display value	33205	61440	33234	192	R/W	Byte	-	0...3	num
V1	**V1-ddL**	Inhibit resources at the end of defrost	33206	15	33234	768	R/W	Byte	-	0/1/2	num
V1	**V1-Ldd**	Display lock timeout from end of defrost	33170	255	33234	3072	R/W	Byte	-	0...250	min
V1	**V1-ndt**	Display with decimal point	33273	32	33234	12288	R/W	Byte	-	0/1	flag
V1	**V1-FSE**	Select display filter	33206	240	33234	49152	R/W	Byte	-	0...7	num
V1	**V1-FdS**	Filter disabling threshold	33085	0	33235	3	R/W	Word	Y	-67.0...302	°C/°F
V1	**V1-Ftt**	Time spent above the filter disabling threshold	33170	0	33235	12	R/W	Byte	-	0...250	min
V1	**V1-FHt**	Sampling interval for filtering	33171	255	33235	48	R/W	Byte	-	1...250	s
V1	**V1-PS1**	Password 1 value	33171	0	33235	192	R	Byte	-	0...250	num
V1	**V1-PS2**	Password 2 value	33172	0	33235	768	R	Byte	-	0...250	num
V1	**V1-H00**	Select analog input type NTC/PTC/Pt1000	33206	3840	33235	3072	R/W	Byte	-	0/1/2	num
V1	**V1-H08**	Stand-by operating mode	33221	3	33235	12288	R/W	Byte	-	0/1/2	num
V1	**V1-H11**	Digital input 1 configuration and polarity	33173	255	33235	49152	R/W	Word	Y	-10...10	num
V1	**V1-H21**	Digital output 1 configuration	33176	0	33236	12288	R/W	Byte	-	0...13	num
V1	**V1-H22**	Digital output 2 configuration	33177	255	33236	49152	R/W	Byte	-	0...12	num
V1	**V1-H23**	Digital output 3 configuration	33177	0	33237	3	R/W	Byte	-	0...12	num
V1	**V1-H24**	Digital output 4 configuration	33178	255	33237	12	R/W	Byte	-	0...12	num
V1	**V1-H25**	Digital output 5 (buzzer) configuration	33189	255	33227	12288	R/W	Byte	-	0/1	num
V1	**V1-H31**	Key configuration △	33206	61440	33237	48	R/W	Byte	-	0...8	num
V1	**V1-H32**	Key configuration ▽	33207	15	33237	192	R/W	Byte	-	0...8	num
V1	**V1-H33**	Key configuration ⏻	33207	240	33237	768	R/W	Byte	-	0...8	num
V1	**V1-H34**	Key configuration 💡	33207	3840	33237	3072	R/W	Byte	-	0...8	num
V1	**V1-H35**	Key configuration ☆	33207	61440	33237	12288	R/W	Byte	-	0...8	num
V1	**V1-H42**	Evaporator probe present	33208	61440	33238	3	R/W	Byte	-	0/1	flag
V1	**V1-H43**	Probe Pb3 present	33209	15	33238	12	R/W	Byte	-	0/1/2	num
V1	**V1-H45**	Defrost input mode for applications with dual evaporator	33211	15	33246	49152	R/W	Byte	-	0...3	num

Folders	Label	Description	Par. Address Val.	Filter Val.	Par. Address Vis.	Filter Vis.	R/W	Data Size	CPL	Range	UM
V1	**V1-H48**	RTC present	33273	64	33238	48	R/W	Byte	-	0/1	flag
V1	**V1-CEr**	Probe error capacity	33087	0	33238	768	R/W	Byte	-	0...100	%
V1	**V1-PdS**	Pull Down forced startup differential	33089	0	33238	3072	R/W	Word	Y	-50.0...50.0	K/°R
V1	**V1-PUS**	Pull Up forced startup differential	33090	0	33238	12288	R/W	Word	Y	-50.0...50.0	K/°R
V1	**V1-PUd**	Temperature outside range timeout	33091	0	33238	49152	R/W	Byte	-	0...1000	min
V1	**V1-PdE**	Pull Down end differential	33093	0	33239	3	R/W	Word	Y	-50.0...50.0	K/°R
V1	**V1-PUE**	Pull Up end differential	33094	0	33239	12	R/W	Word	Y	-50.0...50.0	K/°R
V1	**V1-Pdt**	Optimized Pull Down timeout	33095	0	33239	48	R/W	Byte	-	0...1000	min
V1	**V1-Pdd**	Optimized Pull Down capacity	33097	0	33239	192	R/W	Byte	-	0...100	%
V1	**V1-CPd**	Capacity after Pull Down day	33098	0	33239	768	R/W	Byte	-	0...100	%
V1	**V1-CPn**	Capacity after Pull Down night	33099	0	33239	3072	R/W	Byte	-	0...100	%
V1	**V1-CPb**	Compressor PID proportional band	33102	0	33239	49152	R/W	Word	Y	0.1...3200	K/°R
V1	**V1-Cti**	Compressor PID integral time	33103	0	33240	768	R/W	Word	-	0...65535	s
V1	**V1-Ctd**	Compressor PID derivative time	33105	0	33240	3072	R/W	Word	-	0...65535	s
V1	**V1-CSd**	Compressor startup duration	33106	0	33240	12288	R/W	Word	-	0...900	s
V1	**V1-CSC**	Capacity during compressor startup	33107	0	33240	49152	R/W	Word	-	44.4...100	%
V1	**V1-CAU**	Select PID automatic or manual mode	33174	0	33241	12	R/W	Byte	-	0/1	flag
V1	**V1-CdU**	PID duty cycle in manual mode	33110	0	33241	48	R/W	Byte	-	0...100	num
V1	**V1-F_1**	Maximum frequency	33119	0	33242	192	R/W	Byte	-	0...250	Hz
V1	**V1-F_2**	Minimum frequency	33121	0	33242	768	R/W	Byte	-	0...250	Hz
Application 2 parameters											
V2	**V2-SEt**	Regulation setpoint	33281	0	33447	49152	R/W	Word	Y	**LSE**...**HSE**	°C/°F
V2	**V2-diF**	Activation differential	33282	0	33444	768	R/W	Word	-	0.1...30.0	°C/°F
V2	**V2-LSE**	Minimum setpoint value that can be set	33283	0	33444	3072	R/W	Word	Y	-67.0...**HSE**	°C/°F
V2	**V2-HSE**	Maximum setpoint value that can be set	33285	0	33444	12288	R/W	Word	Y	**LSE**...302	°C/°F
V2	**V2-HC**	Operating mode (Heating/Cooling)	33492	256	33444	49152	R/W	Byte	-	0/1	flag

Folders	Label	Description	Par. Address Val.	Filter Val.	Par. Address Vis.	Filter Vis.	R/W	Data Size	CPL	Range	UM
V2	V2-ont	Compressor output ON time if probe Pb1 is in error	33280	0	33445	3	R/W	Byte	-	0...250	min
V2	V2-oFt	Compressor output OFF time if probe Pb1 is in error	33284	0	33445	12	R/W	Byte	-	0...250	min
V2	V2-don	Compressor output activation delay from call	33288	0	33445	48	R/W	Byte	-	0...250	s
V2	V2-doF	Compressor output activation delay from switch-off	33292	0	33445	192	R/W	Byte	-	0...250	min
V2	V2-dbi	Delay between two consecutive compressor output power-ons	33296	0	33445	768	R/W	Byte	-	0...250	min
V2	V2-Cit	Minimum compressor output activation time	33312	0	33446	3	R/W	Byte	-	0...250	min
V2	V2-CAt	Maximum compressor output activation time	33316	0	33446	12	R/W	Byte	-	0...250	min
V2	V2-odo	Output activation delay at startup	33300	0	33445	3072	R/W	Byte	-	0...250	min
V2	V2-dCS	Deep cooling setpoint	33346	0	33463	768	R/W	Word	Y	-67.0...302	°C/°F
V2	V2-tdC	Deep cooling duration	33398	0	33464	12288	R/W	Byte	-	0...250	min
V2	V2-dcc	Defrost delay after deep cooling	33395	0	33464	3072	R/W	Byte	-	0...250	min
V2	V2-CP2	Compressor 2 activation delay	33399	255	33464	49152	R/W	Byte	-	0...250	min
V2	V2-dFA	Condenser fan and compressor activation delay from the call	33407	0	33446	3072	R/W	Byte	-	0...250	s
V2	V2-dtY	Type of defrost	33424	61440	33446	768	R/W	Byte	-	0/1/2	num
V2	V2-doH	Defrost cycle activation delay from the call	33332	0	33447	3	R/W	Byte	-	0...250	min
V2	V2-dEt	Defrost timeout. Determines the maximum duration of the defrost.	33328	0	33446	12288	R/W	Byte	-	1...250	min
V2	V2-dS1	Evaporator 1 defrost end temperature	33286	0	33447	12	R/W	Word	Y	-67.0...302	°C/°F
V2	V2-dS2	Evaporator 2 defrost end temperature	33287	0	33447	48	R/W	Word	Y	-67.0...302	°C/°F
V2	V2-dt2	Unit of measure for defrost duration	33441	192	33446	49152	R/W	Byte	-	0/1/2	num
V2	V2-dPo	Defrost activation request at startup, if the temperature measured by Pb2 allows.	33492	1024	33447	768	R/W	Byte	-	0/1	flag
V2	V2-tCd	Compressor output activation/deactivation time before a defrost	33308	0	33445	49152	R/W	Byte	-	0...250	min
V2	V2-Cod	Compressor OFF time before defrost	33304	0	33445	12288	R/W	Byte	-	0...250	min
V2	V2-dMr	Enable defrost timer reset with manual defrost	33493	2048	33477	12	R/W	Byte	-	0/1	flag
V2	V2-d00	Cumulative time for defrost activation	33401	0	33465	12	R/W	Byte	-	0...250	hours
V2	V2-d01	Parameter d00 unit of measure	33441	12	33467	12	R/W	Byte	-	0/1/2	num
V2	V2-dit	Device time for defrost activation	33324	0	33465	49152	R/W	Byte	-	0...250	hours
V2	V2-d11	Parameter dit unit of measure	33441	48	33467	48	R/W	Byte	-	0/1/2	num
V2	V2-d20	Enable defrost at compressor stop	33493	256	33467	768	R/W	Byte	-	0/1	flag

Folders	Label	Description	Par. Address Val.	Filter Val.	Par. Address Vis.	Filter Vis.	R/W	Data Size	CPL	Range	UM
V2	**V2-d40**	Select defrost probe 1	33429	240	33466	3	R/W	Byte	-	0/1	flag
V2	**V2-d41**	Temperature threshold for starting defrost	33349	0	33463	49152	R/W	Word	Y	-67.0...302	°C/°F
V2	**V2-d42**	Time the evaporator temperature must remain below the threshold	33351	0	33463	12288	R/W	Byte	-	0...250	min
V2	**V2-d43**	Time count mode for temperature below threshold	33429	3840	33466	12	R/W	Byte	-	0...3	num
V2	**V2-d44**	Threshold management mode	33429	61440	33466	48	R/W	Byte	-	0/1	flag
V2	**V2-d90**	Clock defrost mode	33430	3840	33466	3072	R/W	Byte	-	0...3	num
V2	**V2-d91**	Number of daily defrosts	33402	255	33465	48	R/W	Byte	-	0...255	num
V2	**V2-d92**	1st weekend/holiday day	33430	15	33466	192	R/W	Byte	-	0...7	num
V2	**V2-d93**	2nd weekend/holiday day	33430	240	33466	768	R/W	Byte	-	0...7	num
V2	**V2-d94**	Regular defrost interval duration	33430	61440	33466	12288	R/W	Byte	-	1...7	num
V2	**V2-d1H**	Weekday defrost no. 1 start hour	33402	0	33465	192	R/W	Byte	-	0...23	hours
V2	**V2-d1n**	Weekday defrost no. 1 start minute	33403	255	33465	768	R/W	Byte	-	0...59	min
V2	**V2-F1H**	Weekend/holiday defrost no. 1 start hour	33403	0	33465	3072	R/W	Byte	-	0...23	hours
V2	**V2-F1n**	Weekend/holiday defrost no. 1 start minute	33404	0	33465	12288	R/W	Byte	-	0...59	min
V2	**V2-FPt**	FSt parameter mode (absolute or relative)	33492	4096	33449	3	R/W	Byte	-	0/1	flag
V2	**V2-FSt**	Evaporator fan disabling temperature	33290	0	33449	12	R/W	Word	Y	-67.0...302	°C/°F
V2	**V2-FAd**	Evaporator fan trigger differential	33381	0	33449	48	R/W	Word	-	1.0...25.0	°C/°F
V2	**V2-Fdt**	Evaporator fan activation delay time after a defrost cycle	33344	0	33463	48	R/W	Byte	-	0...250	min
V2	**V2-dt**	Dripping time	33382	255	33449	192	R/W	Byte	-	0...250	min
V2	**V2-dFd**	Evaporator fan cut-out during defrost	33492	8192	33449	768	R/W	Byte	-	0/1	flag
V2	**V2-FCO**	Evaporator fan status with compressor output OFF	33425	15	33448	49152	R/W	Byte	-	0...3	num
V2	**V2-Fon**	Evaporator fan ON time in cyclical regulator mode	33383	255	33449	12288	R/W	Byte	-	0...250	min
V2	**V2-FoF**	Evaporator fan OFF time in cyclical regulator mode	33383	0	33449	49152	R/W	Byte	-	0...250	min
V2	**V2-Fnn**	Evaporator fan ON time in night duty cycle mode	33380	0	33448	3072	R/W	Byte	-	0...250	num
V2	**V2-FnF**	Evaporator fan OFF time in night duty cycle mode	33381	255	33448	12288	R/W	Byte	-	0...250	num
V2	**V2-ESF**	Night mode activation	33493	512	33467	3072	R/W	Byte	-	0/1	flag
V2	**V2-Att**	**HAL** and **LAL** parameter mode (absolute or relative)	33492	32768	33450	12	R/W	Byte	-	0/1	flag

Folders	Label	Description	Par. Address Val.	Filter Val.	Par. Address Vis.	Filter Vis.	R/W	Data Size	CPL	Range	UM
V2	**V2-AFd**	Alarm activation differential	33384	0	33450	48	R/W	Word	-	0.1...25.0	°C/°F
V2	**V2-HAL**	Maximum alarm threshold	33291	0	33450	192	R/W	Word	Y	**LAL**...302	°C/°F
V2	**V2-LAL**	Minimum alarm threshold	33293	0	33450	768	R/W	Word	Y	-67.0...**HAL**	°C/°F
V2	**V2-PAo**	Alarm exclusion at startup	33385	255	33450	3072	R/W	Byte	-	0...10	hours
V2	**V2-dAo**	Exclusion time for temperature alarms after a defrost cycle	33385	0	33450	12288	R/W	Word	-	0...250	min
V2	**V2-oAo**	High and low temperature alarms exclusion time after closing the door	33386	255	33450	49152	R/W	Byte	-	0...10	hours
V2	**V2-tdo**	Door open alarm exclusion time	33387	255	33451	49152	R/W	Byte	-	0...250	min
V2	**V2-tAo**	Temperature alarm signaling delay time	33386	0	33451	3	R/W	Byte	-	0...250	min
V2	**V2-dAt**	Defrost ended due to timeout alarm signaling	33294	0	33451	12	R/W	Byte	-	0/1	flag
V2	**V2-EAL**	External alarm inhibits the regulators	33431	3840	33451	48	R/W	Byte	-	0/1/2	num
V2	**V2-AoP**	Alarm output polarity	33493	1	33451	768	R/W	Byte	-	0/1	flag
V2	**V2-SA3**	Alarm setpoint for probe 3	33343	0	33463	12	R/W	Word	Y	-67.0...302	°C/°F
V2	**V2-dA3**	Probe 3 alarm tripping differential	33345	0	33463	192	R/W	Word	-	0.1...30.0	°C/°F
V2	**V2-dOd**	Enable utility shutoff upon door switch activation	33425	3840	33451	12288	R/W	Byte	-	0...3	num
V2	**V2-dAd**	Digital input activation delay	33394	255	33456	3072	R/W	Byte	-	0...250	min
V2	**V2-dCO**	Compressor deactivation delay from door opening	33352	0	33447	3072	R/W	Byte	-	0...250	min
V2	**V2-AUP**	Associate aux relay with door switch	33425	240	33451	192	R/W	Byte	-	0/1	flag
V2	**V2-PEn**	Number of activations permitted per minimum/maximum pressure switch input	33406	255	33462	12288	R/W	Byte	-	0...15	num
V2	**V2-PEi**	Minimum/maximum pressure switch error calculation interval	33406	0	33462	49152	R/W	Byte	-	1...99	min
V2	**V2-PEt**	Compressor activation delay after pressure switch deactivation	33407	255	33463	3	R/W	Byte	-	0...255	min
V2	**V2-oSP**	Offset on setpoint	33295	0	33452	49152	R/W	Word	Y	-30.0...30.0	°C/°F
V2	**V2-odF**	Trigger differential correction	33297	0	33453	48	R/W	Word	-	0.1...30.0	°C/°F
V2	**V2-dro**	Select °C / °F	33493	8	33453	192	R/W	Byte	-	0/1	flag
V2	**V2-CA1**	Probe Pb1 calibration	33298	0	33453	768	R/W	Word	Y	-30.0...30.0	°C/°F
V2	**V2-CA2**	Probe Pb2 calibration	33299	0	33453	3072	R/W	Word	Y	-30.0...30.0	°C/°F
V2	**V2-CA3**	Probe Pb3 calibration	33301	0	33453	12288	R/W	Word	Y	-30.0...30.0	°C/°F
V2	**V2-CAi**	Calibration trigger	33440	49152	33453	49152	R/W	Byte	-	0/1/2	num
V2	**V2-LoC**	Enable keypad lock	33493	16	33454	48	R/W	Byte	-	0/1	flag

Folders	Label	Description	Par. Address Val.	Filter Val.	Par. Address Vis.	Filter Vis.	R/W	Data Size	CPL	Range	UM
V2	**V2-ddd**	Select main display value	33425	61440	33454	192	R/W	Byte	-	0...3	num
V2	**V2-ddL**	Inhibit resources at the end of defrost	33426	15	33454	768	R/W	Byte	-	0/1/2	num
V2	**V2-Ldd**	Display lock timeout from end of defrost	33390	255	33454	3072	R/W	Byte	-	0...250	min
V2	**V2-ndt**	Display with decimal point	33493	32	33454	12288	R/W	Byte	-	0/1	flag
V2	**V2-FSE**	Select display filter	33426	240	33454	49152	R/W	Byte	-	0...7	num
V2	**V2-FdS**	Filter disabling threshold	33305	0	33455	3	R/W	Word	Y	-67.0...302	°C/°F
V2	**V2-Ftt**	Time spent above the filter disabling threshold	33390	0	33455	12	R/W	Byte	-	0...250	min
V2	**V2-FHt**	Sampling interval for filtering	33391	255	33455	48	R/W	Byte	-	1...250	s
V2	**V2-PS1**	Password 1 value	33391	0	33455	192	R	Byte	-	0...250	num
V2	**V2-PS2**	Password 2 value	33392	0	33455	768	R	Byte	-	0...250	num
V2	**V2-H00**	Select analog input type NTC/PTC/Pt1000	33426	3840	33455	3072	R/W	Byte	-	0/1/2	num
V2	**V2-H08**	Stand-by operating mode	33441	3	33455	12288	R/W	Byte	-	0/1/2	num
V2	**V2-H11**	Digital input 1 configuration and polarity	33393	255	33455	49152	R/W	Word	Y	-10...10	num
V2	**V2-H21**	Digital output 1 configuration	33396	0	33456	12288	R/W	Byte	-	0...13	num
V2	**V2-H22**	Digital output 2 configuration	33397	255	33456	49152	R/W	Byte	-	0...12	num
V2	**V2-H23**	Digital output 3 configuration	33397	0	33457	3	R/W	Byte	-	0...12	num
V2	**V2-H24**	Digital output 4 configuration	33398	255	33457	12	R/W	Byte	-	0...12	num
V2	**V2-H25**	Digital output 5 (buzzer) configuration	33409	255	33447	12288	R/W	Byte	-	0/1	num
V2	**V2-H31**	Key configuration △	33426	61440	33457	48	R/W	Byte	-	0...8	num
V2	**V2-H32**	Key configuration ▽	33427	15	33457	192	R/W	Byte	-	0...8	num
V2	**V2-H33**	Key configuration ⏻	33427	240	33457	768	R/W	Byte	-	0...8	num
V2	**V2-H34**	Key configuration 💡	33427	3840	33457	3072	R/W	Byte	-	0...8	num
V2	**V2-H35**	Key configuration ☆	33427	61440	33457	12288	R/W	Byte	-	0...8	num
V2	**V2-H42**	Evaporator probe present	33428	61440	33458	3	R/W	Byte	-	0/1	flag
V2	**V2-H43**	Probe Pb3 present	33429	15	33458	12	R/W	Byte	-	0/1/2	num
V2	**V2-H45**	Defrost input mode for applications with dual evaporator	33431	15	33466	49152	R/W	Byte	-	0...3	num
V2	**V2-H48**	RTC present	33493	64	33458	48	R/W	Byte	-	0/1	flag
V2	**V2-CEr**	Probe error capacity	33307	0	33458	768	R/W	Byte	-	0...100	%

Folders	Label	Description	Par. Address Val.	Filter Val.	Par. Address Vis.	Filter Vis.	R/W	Data Size	CPL	Range	UM
V2	**V2-PdS**	Pull Down forced startup differential	33309	0	33458	3072	R/W	Word	Y	-50.0...50.0	K/°R
V2	**V2-PUS**	Pull Up forced startup differential	33310	0	33458	12288	R/W	Word	Y	-50.0...50.0	K/°R
V2	**V2-PUd**	Temperature outside range timeout	33311	0	33458	49152	R/W	Byte	-	0...1000	min
V2	**V2-PdE**	Pull Down end differential	33313	0	33459	3	R/W	Word	Y	-50.0...50.0	K/°R
V2	**V2-PUE**	Pull Up end differential	33314	0	33459	12	R/W	Word	Y	-50.0...50.0	K/°R
V2	**V2-Pdt**	Optimized Pull Down timeout	33315	0	33459	48	R/W	Byte	-	0...1000	min
V2	**V2-Pdd**	Optimized Pull Down capacity	33317	0	33459	192	R/W	Byte	-	0...100	%
V2	**V2-CPd**	Capacity after Pull Down day	33318	0	33459	768	R/W	Byte	-	0...100	%
V2	**V2-CPn**	Capacity after Pull Down night	33319	0	33459	3072	R/W	Byte	-	0...100	%
V2	**V2-CPb**	Compressor PID proportional band	33322	0	33459	49152	R/W	Word	Y	0.1...3200	K/°R
V2	**V2-Cti**	Compressor PID integral time	33323	0	33460	768	R/W	Word	-	0...65535	s
V2	**V2-Ctd**	Compressor PID derivative time	33325	0	33460	3072	R/W	Word	-	0...65535	s
V2	**V2-CSd**	Compressor startup duration	33326	0	33460	12288	R/W	Word	-	0...900	s
V2	**V2-CSC**	Capacity during compressor startup	33327	0	33460	49152	R/W	Word	-	44.4...100	%
V2	**V2-CAU**	Select PID automatic or manual mode	33394	0	33461	12	R/W	Byte	-	0/1	flag
V2	**V2-CdU**	PID duty cycle in manual mode	33330	0	33461	48	R/W	Byte	-	0...100	num
V2	**V2-F_1**	Maximum frequency	33339	0	33462	192	R/W	Byte	-	0...250	Hz
V2	**V2-F_2**	Minimum frequency	33341	0	33462	768	R/W	Byte	-	0...250	Hz
Application 3 parameters											
V3	**V3-SEt**	Regulation setpoint	33497	0	33663	49152	R/W	Word	Y	**LSE**...**HSE**	°C/°F
V3	**V3-diF**	Activation differential	33498	0	33660	768	R/W	Word	-	0.1...30.0	°C/°F
V3	**V3-LSE**	Minimum setpoint value that can be set	33499	0	33660	3072	R/W	Word	Y	-67.0...**HSE**	°C/°F
V3	**V3-HSE**	Maximum setpoint value that can be set	33501	0	33660	12288	R/W	Word	Y	**LSE**...302	°C/°F
V3	**V3-HC**	Operating mode (Heating/Cooling)	33708	256	33660	49152	R/W	Byte	-	0/1	flag
V3	**V3-ont**	Compressor output ON time if probe Pb1 is in error	33496	0	33661	3	R/W	Byte	-	0...250	min
V3	**V3-oFt**	Compressor output OFF time if probe Pb1 is in error	33500	0	33661	12	R/W	Byte	-	0...250	min

Folders	Label	Description	Par. Address Val.	Filter Val.	Par. Address Vis.	Filter Vis.	R/W	Data Size	CPL	Range	UM
V3	**V3-don**	Compressor output activation delay from call	33504	0	33661	48	R/W	Byte	-	0...250	s
V3	**V3-doF**	Compressor output activation delay from switch-off	33508	0	33661	192	R/W	Byte	-	0...250	min
V3	**V3-dbi**	Delay between two consecutive compressor output power-ons	33512	0	33661	768	R/W	Byte	-	0...250	min
V3	**V3-Cit**	Minimum compressor output activation time	33528	0	33662	3	R/W	Byte	-	0...250	min
V3	**V3-CAt**	Maximum compressor output activation time	33532	0	33662	12	R/W	Byte	-	0...250	min
V3	**V3-odo**	Output activation delay at startup	33516	0	33661	3072	R/W	Byte	-	0...250	min
V3	**V3-dCS**	Deep cooling setpoint	33562	0	33679	768	R/W	Word	Y	-67.0...302	°C/°F
V3	**V3-tdC**	Deep cooling duration	33614	0	33680	12288	R/W	Byte	-	0...250	min
V3	**V3-dcc**	Defrost delay after deep cooling	33611	0	33680	3072	R/W	Byte	-	0...250	min
V3	**V3-CP2**	Compressor 2 activation delay	33615	255	33680	49152	R/W	Byte	-	0...250	min
V3	**V3-dFA**	Condenser fan and compressor activation delay from the call	33623	0	33662	3072	R/W	Byte	-	0...250	s
V3	**V3-dtY**	Type of defrost	33640	61440	33662	768	R/W	Byte	-	0/1/2	num
V3	**V3-doH**	Defrost cycle activation delay from the call	33548	0	33663	3	R/W	Byte	-	0...250	min
V3	**V3-dEt**	Defrost timeout. Determines the maximum duration of the defrost.	33544	0	33662	12288	R/W	Byte	-	1...250	min
V3	**V3-dS1**	Evaporator 1 defrost end temperature	33502	0	33663	12	R/W	Word	Y	-67.0...302	°C/°F
V3	**V3-dS2**	Evaporator 2 defrost end temperature	33503	0	33663	48	R/W	Word	Y	-67.0...302	°C/°F
V3	**V3-dt2**	Unit of measure for defrost duration	33657	192	33662	49152	R/W	Byte	-	0/1/2	num
V3	**V3-dPo**	Defrost activation request at startup, if the temperature measured by Pb2 allows.	33708	1024	33663	768	R/W	Byte	-	0/1	flag
V3	**V3-tCd**	Compressor output activation/deactivation time before a defrost	33524	0	33661	49152	R/W	Byte	-	0...250	min
V3	**V3-Cod**	Compressor OFF time before defrost	33520	0	33661	12288	R/W	Byte	-	0...250	min
V3	**V3-dMr**	Enable defrost timer reset with manual defrost	33709	2048	33693	12	R/W	Byte	-	0/1	flag
V3	**V3-d00**	Cumulative time for defrost activation	33617	0	33681	12	R/W	Byte	-	0...250	hours
V3	**V3-d01**	Parameter d00 unit of measure	33657	12	33683	12	R/W	Byte	-	0/1/2	num
V3	**V3-dit**	Device time for defrost activation	33540	0	33681	49152	R/W	Byte	-	0...250	hours
V3	**V3-d11**	Parameter dit unit of measure	33657	48	33683	48	R/W	Byte	-	0/1/2	num
V3	**V3-d20**	Enable defrost at compressor stop	33709	256	33683	768	R/W	Byte	-	0/1	flag
V3	**V3-d40**	Select defrost probe 1	33645	240	33682	3	R/W	Byte	-	0/1	flag
V3	**V3-d41**	Temperature threshold for starting defrost	33565	0	33679	49152	R/W	Word	Y	-67.0...302	°C/°F

Folders	Label	Description	Par. Address Val.	Filter Val.	Par. Address Vis.	Filter Vis.	R/W	Data Size	CPL	Range	UM
V3	**V3-d42**	Time the evaporator temperature must remain below the threshold	33567	0	33679	12288	R/W	Byte	-	0...250	min
V3	**V3-d43**	Time count mode for temperature below threshold	33645	3840	33682	12	R/W	Byte	-	0...3	num
V3	**V3-d44**	Threshold management mode	33645	61440	33682	48	R/W	Byte	-	0/1	flag
V3	**V3-d90**	Clock defrost mode	33646	3840	33682	3072	R/W	Byte	-	0...3	num
V3	**V3-d91**	Number of daily defrosts	33618	255	33681	48	R/W	Byte	-	0...255	num
V3	**V3-d92**	1st weekend/holiday day	33646	15	33682	192	R/W	Byte	-	0...7	num
V3	**V3-d93**	2nd weekend/holiday day	33646	240	33682	768	R/W	Byte	-	0...7	num
V3	**V3-d94**	Regular defrost interval duration	33646	61440	33682	12288	R/W	Byte	-	1...7	num
V3	**V3-d1H**	Weekday defrost no. 1 start hour	33618	0	33681	192	R/W	Byte	-	0...23	hours
V3	**V3-d1n**	Weekday defrost no. 1 start minute	33619	255	33681	768	R/W	Byte	-	0...59	min
V3	**V3-F1H**	Weekend/holiday defrost no. 1 start hour	33619	0	33681	3072	R/W	Byte	-	0...23	hours
V3	**V3-F1n**	Weekend/holiday defrost no. 1 start minute	33620	0	33681	12288	R/W	Byte	-	0...59	min
V3	**V3-FPt**	FSt parameter mode (absolute or relative)	33708	4096	33665	3	R/W	Byte	-	0/1	flag
V3	**V3-FSt**	Evaporator fan disabling temperature	33506	0	33665	12	R/W	Word	Y	-67.0...302	°C/°F
V3	**V3-FAd**	Evaporator fan trigger differential	33597	0	33665	48	R/W	Word	-	1.0...25.0	°C/°F
V3	**V3-Fdt**	Evaporator fan activation delay time after a defrost cycle	33560	0	33679	48	R/W	Byte	-	0...250	min
V3	**V3-dt**	Dripping time	33598	255	33665	192	R/W	Byte	-	0...250	min
V3	**V3-dFd**	Evaporator fan cut-out during defrost	33708	8192	33665	768	R/W	Byte	-	0/1	flag
V3	**V3-FCO**	Evaporator fan status with compressor output OFF	33641	15	33664	49152	R/W	Byte	-	0...3	num
V3	**V3-Fon**	Evaporator fan ON time in cyclical regulator mode	33599	255	33665	12288	R/W	Byte	-	0...250	min
V3	**V3-FoF**	Evaporator fan OFF time in cyclical regulator mode	33599	0	33665	49152	R/W	Byte	-	0...250	min
V3	**V3-Fnn**	Evaporator fan ON time in night duty cycle mode	33596	0	33664	3072	R/W	Byte	-	0...250	num
V3	**V3-FnF**	Evaporator fan OFF time in night duty cycle mode	33597	255	33664	12288	R/W	Byte	-	0...250	num
V3	**V3-ESF**	Night mode activation	33709	512	33683	3072	R/W	Byte	-	0/1	flag
V3	**V3-Att**	**HAL** and **LAL** parameter mode (absolute or relative)	33708	32768	33666	12	R/W	Byte	-	0/1	flag
V3	**V3-AFd**	Alarm activation differential	33600	0	33666	48	R/W	Word	-	0.1...25.0	°C/°F
V3	**V3-HAL**	Maximum alarm threshold	33507	0	33666	192	R/W	Word	Y	**LAL**...302	°C/°F
V3	**V3-LAL**	Minimum alarm threshold	33509	0	33666	768	R/W	Word	Y	-67.0...**HAL**	°C/°F

Folders	Label	Description	Par. Address Val.	Filter Val.	Par. Address Vis.	Filter Vis.	R/W	Data Size	CPL	Range	UM
V3	**V3-PAo**	Alarm exclusion at startup	33601	255	33666	3072	R/W	Byte	-	0...10	hours
V3	**V3-dAo**	Exclusion time for temperature alarms after a defrost cycle	33601	0	33666	12288	R/W	Word	-	0...250	min
V3	**V3-oAo**	High and low temperature alarms exclusion time after closing the door	33602	255	33666	49152	R/W	Byte	-	0...10	hours
V3	**V3-tdo**	Door open alarm exclusion time	33603	255	33667	49152	R/W	Byte	-	0...250	min
V3	**V3-tAo**	Temperature alarm signaling delay time	33602	0	33667	3	R/W	Byte	-	0...250	min
V3	**V3-dAt**	Defrost ended due to timeout alarm signaling	33510	0	33667	12	R/W	Byte	-	0/1	flag
V3	**V3-EAL**	External alarm inhibits the regulators	33647	3840	33667	48	R/W	Byte	-	0/1/2	num
V3	**V3-AoP**	Alarm output polarity	33709	1	33667	768	R/W			0/1	flag
V3	**V3-SA3**	Alarm setpoint for probe 3	33559	0	33679	12	R/W	Word	Y	-67.0...302	°C/°F
V3	**V3-dA3**	Probe 3 alarm tripping differential	33561	0	33679	192	R/W	Word	-	0.1...30.0	°C/°F
V3	**V3-dOd**	Enable utility shutoff upon door switch activation	33641	3840	33667	12288	R/W	Byte	-	0...3	num
V3	**V3-dAd**	Digital input activation delay	33610	255	33672	3072	R/W	Byte	-	0...250	min
V3	**V3-dCO**	Compressor deactivation delay from door opening	33568	0	33663	3072	R/W	Byte	-	0...250	min
V3	**V3-AUP**	Associate aux relay with door switch	33641	240	33667	192	R/W	Byte	-	0/1	flag
V3	**V3-PEn**	Number of activations permitted per minimum/maximum pressure switch input	33622	255	33678	12288	R/W	Byte	-	0...15	num
V3	**V3-PEi**	Minimum/maximum pressure switch error calculation interval	33622	0	33678	49152	R/W	Byte	-	1...99	min
V3	**V3-PEt**	Compressor activation delay after pressure switch deactivation	33623	255	33679	3	R/W	Byte	-	0...255	min
V3	**V3-oSP**	Offset on setpoint	33511	0	33668	49152	R/W	Word	Y	-30.0...30.0	°C/°F
V3	**V3-odF**	Trigger differential correction	33513	0	33669	48	R/W	Word	-	0.1...30.0	°C/°F
V3	**V3-dro**	Select °C / °F	33709	8	33669	192	R/W	Byte	-	0/1	flag
V3	**V3-CA1**	Probe Pb1 calibration	33514	0	33669	768	R/W	Word	Y	-30.0...30.0	°C/°F
V3	**V3-CA2**	Probe Pb2 calibration	33515	0	33669	3072	R/W	Word	Y	-30.0...30.0	°C/°F
V3	**V3-CA3**	Probe Pb3 calibration	33517	0	33669	12288	R/W	Word	Y	-30.0...30.0	°C/°F
V3	**V3-CAi**	Calibration trigger	33656	49152	33669	49152	R/W	Byte	-	0/1/2	num
V3	**V3-LoC**	Enable keypad lock	33709	16	33670	48	R/W	Byte	-	0/1	flag
V3	**V3-ddd**	Select main display value	33641	61440	33670	192	R/W	Byte	-	0...3	num
V3	**V3-ddL**	Inhibit resources at the end of defrost	33642	15	33670	768	R/W	Byte	-	0/1/2	num
V3	**V3-Ldd**	Display lock timeout from end of defrost	33606	255	33670	3072	R/W	Byte	-	0...250	min
V3	**V3-ndt**	Display with decimal point	33709	32	33670	12288	R/W	Byte	-	0/1	flag

Folders	Label	Description	Par. Address Val.	Filter Val.	Par. Address Vis.	Filter Vis.	R/W	Data Size	CPL	Range	UM
V3	V3-FSE	Select display filter	33642	240	33670	49152	R/W	Byte	-	0...7	num
V3	V3-FdS	Filter disabling threshold	33521	0	33671	3	R/W	Word	Y	-67.0...302	°C/°F
V3	V3-Ftt	Time spent above the filter disabling threshold	33606	0	33671	12	R/W	Byte	-	0...250	min
V3	V3-FHt	Sampling interval for filtering	33607	255	33671	48	R/W	Byte	-	1...250	s
V3	V3-PS1	Password 1 value	33607	0	33671	192	R	Byte	-	0...250	num
V3	V3-PS2	Password 2 value	33608	0	33671	768	R	Byte	-	0...250	num
V3	V3-H00	Select analog input type NTC/PTC/Pt1000	33642	3840	33671	3072	R/W	Byte	-	0/1/2	num
V3	V3-H08	Stand-by operating mode	33657	3	33671	12288	R/W	Byte	-	0/1/2	num
V3	V3-H11	Digital input 1 configuration and polarity	33609	255	33671	49152	R/W	Word	Y	-10...10	num
V3	V3-H21	Digital output 1 configuration	33612	0	33672	12288	R/W	Byte	-	0...13	num
V3	V3-H22	Digital output 2 configuration	33613	255	33672	49152	R/W	Byte	-	0...12	num
V3	V3-H23	Digital output 3 configuration	33613	0	33673	3	R/W	Byte	-	0...12	num
V3	V3-H24	Digital output 4 configuration	33614	255	33673	12	R/W	Byte	-	0...12	num
V3	V3-H25	Digital output 5 (buzzer) configuration	33625	255	33663	12288	R/W	Byte	-	0/1	num
V3	V3-H31	Key configuration △	33642	61440	33673	48	R/W	Byte	-	0...8	num
V3	V3-H32	Key configuration ▽	33643	15	33673	192	R/W	Byte	-	0...8	num
V3	V3-H33	Key configuration ⏻	33643	240	33673	768	R/W	Byte	-	0...8	num
V3	V3-H34	Key configuration 💡	33643	3840	33673	3072	R/W	Byte	-	0...8	num
V3	V3-H35	Key configuration ☆	33643	61440	33673	12288	R/W	Byte	-	0...8	num
V3	V3-H42	Evaporator probe present	33644	61440	33674	3	R/W	Byte	-	0/1	flag
V3	V3-H43	Probe Pb3 present	33645	15	33674	12	R/W	Byte	-	0/1/2	num
V3	V3-H45	Defrost input mode for applications with dual evaporator	33647	15	33682	49152	R/W	Byte	-	0...3	num
V3	V3-H48	RTC present	33709	64	33674	48	R/W	Byte	-	0/1	flag
V3	V3-CEr	Probe error capacity	33523	0	33674	768	R/W	Byte	-	0...100	%
V3	V3-PdS	Pull Down forced startup differential	33525	0	33674	3072	R/W	Word	Y	-50.0...50.0	K/°R
V3	V3-PUS	Pull Up forced startup differential	33526	0	33674	12288	R/W	Word	Y	-50.0...50.0	K/°R

Folders	Label	Description	Par. Address Val.	Filter Val.	Par. Address Vis.	Filter Vis.	R/W	Data Size	CPL	Range	UM
V3	**V3-PUd**	Temperature outside range timeout	33527	0	33674	49152	R/W	Byte	-	0...1000	min
V3	**V3-PdE**	Pull Down end differential	33529	0	33675	3	R/W	Word	Y	-50.0...50.0	K/°R
V3	**V3-PUE**	Pull Up end differential	33530	0	33675	12	R/W	Word	Y	-50.0...50.0	K/°R
V3	**V3-Pdt**	Optimized Pull Down timeout	33531	0	33675	48	R/W	Byte	-	0...1000	min
V3	**V3-Pdd**	Optimized Pull Down capacity	33533	0	33675	192	R/W	Byte	-	0...100	%
V3	**V3-CPd**	Capacity after Pull Down day	33534	0	33675	768	R/W	Byte	-	0...100	%
V3	**V3-CPn**	Capacity after Pull Down night	33535	0	33675	3072	R/W	Byte	-	0...100	%
V3	**V3-CPb**	Compressor PID proportional band	33538	0	33675	49152	R/W	Word	Y	0.1...3200	K/°R
V3	**V3-Cti**	Compressor PID integral time	33539	0	33676	768	R/W	Word	-	0...65535	s
V3	**V3-Ctd**	Compressor PID derivative time	33541	0	33676	3072	R/W	Word	-	0...65535	s
V3	**V3-CSd**	Compressor startup duration	33542	0	33676	12288	R/W	Word	-	0...900	s
V3	**V3-CSC**	Capacity during compressor startup	33543	0	33676	49152	R/W	Word	-	44.4...100	%
V3	**V3-CAU**	Select PID automatic or manual mode	33610	0	33677	12	R/W	Byte	-	0/1	flag
V3	**V3-CdU**	PID duty cycle in manual mode	33546	0	33677	48	R/W	Byte	-	0...100	num
V3	**V3-F–1**	Maximum frequency	33555	0	33678	192	R/W	Byte	-	0...250	Hz
V3	**V3-F–2**	Minimum frequency	33557	0	33678	768	R/W	Byte	-	0...250	Hz

Visibility table for folders relating to applications

Label	Address	Filter	Description	Data size	Range	UM
Visibility of folders for loaded application						
vis_CP	32958	192	Visibility of folder **CP** (compressor)	2 bit	0...3	num
vis_dEF	32958	768	Visibility of folder **dEF** (defrost)	2 bit	0...3	num
vis_FAn	32958	3072	Visibility of folder **FAn** (fans)	2 bit	0...3	num
vis_AL	32958	12288	Visibility of folder **AL** (alarms)	2 bit	0...3	num
vis_Lit	32958	49152	Visibility of folder **Lit** (lights and digital inputs)	2 bit	0...3	num
vis_PrE	32959	3	Visibility of folder **PrE** (pressure switch)	2 bit	0...3	num
vis_ENS	32959	12	Visibility of folder **EnS** (energy saving)	2 bit	0...3	num
vis_Add	32959	48	Visibility of folder **Add** (communication)	2 bit	0...3	num
vis_diS	32959	192	Visibility of folder **diS** (display)	2 bit	0...3	num
vis_CnF	32959	3072	Visibility of folder **CnF** (configuration)	2 bit	0...3	num
vis_FPr	32959	12288	Visibility of folder **FPr** (CopyCard)	2 bit	0...3	num
vis_FnC	32959	49152	Visibility of folder **FnC** (functions)	2 bit	0...3	num

Label	Address	Filter	Description	Data size	Range	UM
vis_VSC	32959	768	Visibility of folder **VSC** (VSC compressor)	2 bit	0...3	num
vis_nAd	32958	48	Visibility of folder **nAd** (night/day)	2 bit	0...3	num
Visibility of folders for AP1 application						
V1-vis_CP	33250	192	Visibility of folder **CP** (compressor)	2 bit	0...3	num
V1-vis_dEF	33250	768	Visibility of folder **dEF** (defrost)	2 bit	0...3	num
V1-vis_FAn	33250	3072	Visibility of folder **FAn** (fans)	2 bit	0...3	num
V1-vis_AL	33250	12288	Visibility of folder **AL** (alarms)	2 bit	0...3	num
V1-vis_Lit	33250	49152	Visibility of folder **Lit** (lights and digital inputs)	2 bit	0...3	num
V1-vis_PrE	33251	3	Visibility of folder **PrE** (pressure switch)	2 bit	0...3	num
V1-vis_ENS	33251	12	Visibility of folder **EnS** (energy saving)	2 bit	0...3	num
V1-vis_Add	33251	48	Visibility of folder **Add** (communication)	2 bit	0...3	num
V1-vis_diS	33251	192	Visibility of folder **diS** (display)	2 bit	0...3	num
V1-vis_CnF	33251	3072	Visibility of folder **CnF** (configuration)	2 bit	0...3	num
V1-vis_FPr	33251	12288	Visibility of folder **FPr** (CopyCard)	2 bit	0...3	num
V1-vis_FnC	33251	49152	Visibility of folder **FnC** (functions)	2 bit	0...3	num
V1-vis_VSC	33251	768	Visibility of folder **VSC** (VSC compressor)	2 bit	0...3	num
V1-vis_nAd	33250	48	Visibility of folder **nAd** (night/day)	2 bit	0...3	num
Visibility of folders for AP2 application						
V2-vis_CP	33470	192	Visibility of folder **CP** (compressor)	2 bit	0...3	num
V2-vis_dEF	33470	768	Visibility of folder **dEF** (defrost)	2 bit	0...3	num
V2-vis_FAn	33470	3072	Visibility of folder **FAn** (fans)	2 bit	0...3	num
V2-vis_AL	33470	12288	Visibility of folder **AL** (alarms)	2 bit	0...3	num
V2-vis_Lit	33470	49152	Visibility of folder **Lit** (lights and digital inputs)	2 bit	0...3	num
V2-vis_PrE	33471	3	Visibility of folder **PrE** (pressure switch)	2 bit	0...3	num
V2-vis_ENS	33471	12	Visibility of folder **EnS** (energy saving)	2 bit	0...3	num
V2-vis_Add	33471	48	Visibility of folder **Add** (communication)	2 bit	0...3	num
V2-vis_diS	33471	192	Visibility of folder **diS** (display)	2 bit	0...3	num
V2-vis_CnF	33471	3072	Visibility of folder **CnF** (configuration)	2 bit	0...3	num
V2-vis_FPr	33471	12288	Visibility of folder **FPr** (CopyCard)	2 bit	0...3	num
V2-vis_FnC	33471	49152	Visibility of folder **FnC** (functions)	2 bit	0...3	num
V2-vis_VSC	33471	768	Visibility of folder **VSC** (VSC compressor)	2 bit	0...3	num
V2-vis_nAd	33470	48	Visibility of folder **nAd** (night/day)	2 bit	0...3	num
Visibility of folders for AP3 application						
V3-vis_CP	33686	192	Visibility of folder **CP** (compressor)	2 bit	0...3	num
V3-vis_dEF	33686	768	Visibility of folder **dEF** (defrost)	2 bit	0...3	num
V3-vis_FAn	33686	3072	Visibility of folder **FAn** (fans)	2 bit	0...3	num
V3-vis_AL	33686	12288	Visibility of folder **AL** (alarms)	2 bit	0...3	num
V3-vis_Lit	33686	49152	Visibility of folder **Lit** (lights and digital inputs)	2 bit	0...3	num
V3-vis_PrE	33687	3	Visibility of folder **PrE** (pressure switch)	2 bit	0...3	num
V3-vis_ENS	33687	12	Visibility of folder **EnS** (energy saving)	2 bit	0...3	num
V3-vis_Add	33687	48	Visibility of folder **Add** (communication)	2 bit	0...3	num
V3-vis_diS	33687	192	Visibility of folder **diS** (display)	2 bit	0...3	num
V3-vis_CnF	33687	3072	Visibility of folder **CnF** (configuration)	2 bit	0...3	num
V3-vis_FPr	33687	12288	Visibility of folder **FPr** (CopyCard)	2 bit	0...3	num
V3-vis_FnC	33687	49152	Visibility of folder **FnC** (functions)	2 bit	0...3	num
V3-vis_VSC	33687	768	Visibility of folder **VSC** (VSC compressor)	2 bit	0...3	num
V3-vis_nAd	33686	48	Visibility of folder **nAd** (night/day)	2 bit	0...3	num

Table of Modbus Resources

Label	Description	Address	Filter	Type	Data_Size	CPL	Range	UM
AI1	Regulation probe	4109	0	R	Word	Y	-67.0...320	°C/°F
AI2	Defrost probe	4110	0	R	Word	Y	-67.0...320	°C/°F
AI3_a	Second evaporator defrost probe	4111	0	R	Word	Y	-67.0...320	°C/°F
AI3_b	Compressor temperature probe	4111	0	R	Word	Y	-67.0...320	°C/°F
SET	Regulation setpoint 1 value	4114	0	R	Word	Y	-67.0...320	°C/°F
Cap	Power generated by compressor 1	4125	0	R	Word	-	0.0...100	
DI1	Digital input 1	4118	1	R	1 bit	-	0...1	flag
DI2	Digital input 2	4118	2	R	1 bit	-	0...1	flag
E1	Analog input 1 fault	4121	1	R	1 bit	-	0...1	flag
E2	Analog input 2 fault	4121	2	R	1 bit	-	0...1	flag
E3	Analog input 3 fault	4121	4	R	1 bit	-	0...1	flag
Opd	Door open	4121	8	R	1 bit	-	0...1	flag
EA	External	4121	16	R	1 bit	-	0...1	flag
AL1	Analog input 1 lower limit exceeded	4121	32	R	1 bit	-	0...1	flag
AH1	Analog input 1 higher limit exceeded	4121	64	R	1 bit	-	0...1	flag
Ad2	Defrost end due to timeout	4121	128	R	1 bit	-	0...1	flag
E10	RTC error	4121	256	R	1 bit	-	0...1	flag
COH	Overtemperature alarm	4121	512	R	1 bit	-	0...1	flag
rCA	Low liquid refrigerant level	4121	1024	R	1 bit	-	0...1	flag
nPA	Pressure switch	4121	2048	R	1 bit	-	0...1	flag
PA	Critical pressure	4121	4096	R	1 bit	-	0...1	flag
ALM	Alarm	4115	256	R	1 bit	-	0...1	flag
RL1	Control output 1	4120	1	R	1 bit	-	0...1	flag
RL2	Control output 2	4120	2	R	1 bit	-	0...1	flag
RL3	Control output 3	4120	4	R	1 bit	-	0...1	flag
RL4	Control output 4	4120	8	R	1 bit	-	0...1	flag
BUZ	Buzzer	4120	256	R	1 bit	-	0...1	flag
CP1	Compressor 1	4115	2	R	1 bit	-	0...1	flag
CP2	Compressor 2	4115	4	R	1 bit	-	0...1	flag
DEF1	Defrost 1	4115	16	R	1 bit	-	0...3	flag
DEF2	Defrost 2	4115	32	R	1 bit	-	0...3	flag
FAN	Evaporator fans	4115	64	R	1 bit	-	0...1	flag
FAN_C	Condenser fans	4115	128	R	1 bit	-	0...1	flag
LIGHT	Light	4115	1024	R	1 bit	-	0...1	flag
AUX	Auxiliary	4115	512	R	1 bit	-	0...1	flag
STD-BY	Stand-by	4115	1	R	1 bit	-	0...1	flag
ENS	Energy saving	4115	16384	R	1 bit	-	0...1	flag
ECO	Reduced set	4115	8192	R	1 bit	-	0...1	flag
DEEP	Deep Cooling	4115	2048	R	1 bit	-	0...1	flag
DO	Door status	4115	32768	R	1 bit	-	0...1	flag
ROnAux	Activates auxiliary output	4123	1	W	1 bit	-	0...1	flag
ROffAux	Deactivates auxiliary output	4123	2	W	1 bit	-	0...1	flag
ROnOn	Device on	4123	4	W	1 bit	-	0...1	flag
ROffOff	Device off	4123	8	W	1 bit	-	0...1	flag
AttEnSav	Activates energy saving function	4123	16	W	1 bit	-	0...1	flag
DisattEnSav	Deactivates energy saving function	4123	32	W	1 bit	-	0...1	flag
Att_SetR	Activates economy mode	4123	64	W	1 bit	-	0...1	flag
Disatt_SetR	Deactivates economy mode	4123	128	W	1 bit	-	0...1	flag
ROnLight	Switches lights on	4123	256	W	1 bit	-	0...1	flag
ROffLight	Switches lights off	4123	512	W	1 bit	-	0...1	flag

Label	Description	Address	Filter	Type	Data_Size	CPL	Range	UM
ROnLoc	Keypad lock	4123	1024	W	1 bit	-	0...1	flag
ROffLoc	Keypad unlock	4123	2048	W	1 bit	-	0...1	flag
Att_Sbr	Manual Defrost activation	4123	4096	W	1 bit	-	0...1	flag
DCOn	Deep Cooling regulator activation	4124	2	W	1 bit	-	0...1	flag
RTCUp	Updates clock	4124	4	W	1 bit	-	0...1	flag
TestOn	Enables autotest	0	2	W	1 bit	-	0...1	flag
TestOff	Resets test request	0	2	W	1 bit	-	0...1	flag
OffRL1	Disables output 1	206	1	W	1 bit	-	0...1	flag
OnRL2	Enables output 2	206	2	W	1 bit	-	0...1	flag
OffRL2	Disables output 2	206	2	W	1 bit	-	0...1	flag
OnRL3	Enables output 3	206	4	W	1 bit	-	0...1	flag
OffRL3	Disables output 3	206	4	W	1 bit	-	0...1	flag
OnRL4	Enables output 4	206	8	W	1 bit	-	0...1	flag
OffRL4	Disables output 4	206	8	W	1 bit	-	0...1	flag
OnBuzz	Enables output 5	0	64	W	1 bit	-	0...1	flag
OffBuzz	Disables output 5	0	64	W	1 bit	-	0...1	flag
OnAllRL	Enables output	206	15	W	Word	-	0...255	num
OffAllRL	Disables output	206	15	W	Word	-	0...255	num
tim_CP1	Compressor 1 run time	4171	0	R	Word	-	0...65535	hours*10
cnt_CP1	Compressor 1 number of activations	4172	0	R	Word	-	0...65535	num
tim_DEF1	Defrost 1 activation time	4173	0	R	Word	-	0...65535	min
cnt_DEF1	Defrost 1 number of activations	4175	0	R	Word	-	0...65535	num
tim_Door	Door opening time	4176	0	R	Word	-	0...65535	min
cnt_Door	Door opening count	4177	0	R	Word	-	0...65535	num
tim_DEF2	Defrost 2 activation time	4179	0	R	Word	-	0...65535	min
cnt_DEF2	Defrost 2 number of activations	4180	0	R	Word	-	0...65535	num
cnt_POWER	Number of instrument power-ons	4181	0	R	Word	-	0...65535	num
tim_CP2	Compressor 2 run time	4183	0	R	Word	-	0...65535	hours*10
cnt_CP2	Compressor 2 number of activations	4184	0	R	Word	-	0...65535	num

Eliwell Controls srl
Via dell'Industria, 15 Z.I. Paludi
32016 Alpago (BL) Italy
Telephone +39 (0) 437 986 111
www.eliwell.com

Technical Customers Support
Telephone +39 (0) 437 986 300
E techsuppeliwell@schneider-electric.com

Sales
Telephone +39 (0) 437 986 100 (Italy)
Telephone +39 (0) 437 986 200 (other countries)
E saleseliwell@schneider-electric.com

IDNXP-00EN - IDNext -HC - EN - 01/20
© 2020 Eliwell - All rights reserved